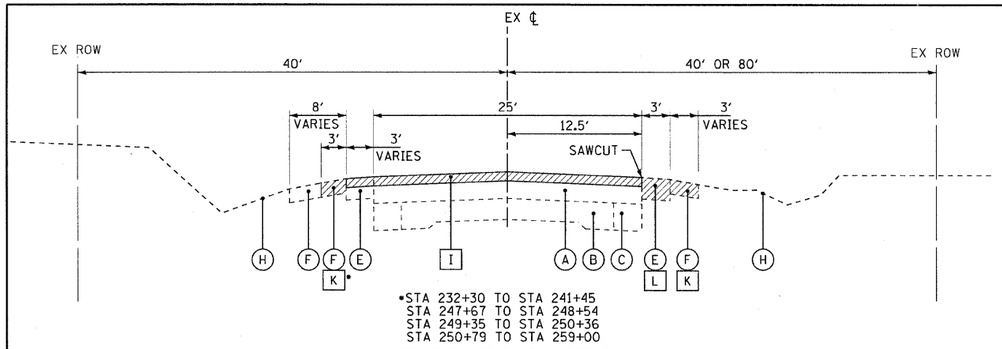

•STA 232+30 TO STA 241+45
STA 247+67 TO STA 248+54
STA 249+35 TO STA 250+36
STA 250+79 TO STA 259+00

EXISTING TYPICAL SECTION
IL ROUTE 31
STA 231+40 TO STA 241+65
STA 247+10 TO STA 259+00

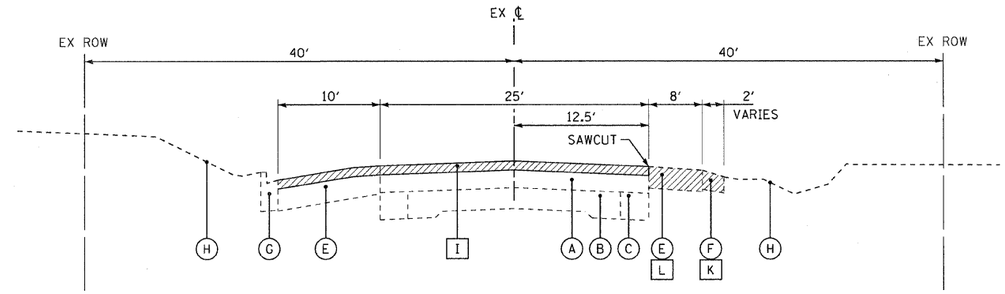

EXISTING TYPICAL SECTION
IL ROUTE 31
STA 241+65 TO STA 247+10

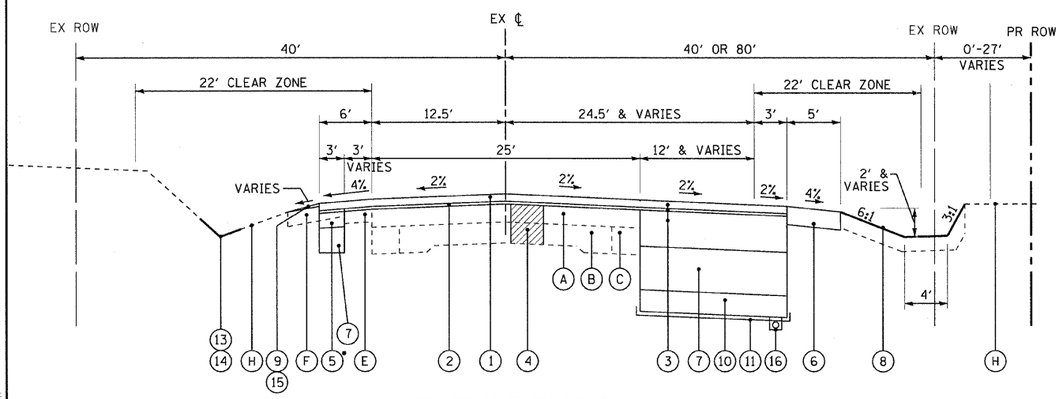

•STA 232+30 TO STA 241+45
STA 247+67 TO STA 248+54
STA 249+35 TO STA 250+36
STA 250+79 TO STA 259+00

PROPOSED TYPICAL SECTION
IL ROUTE 31
STA 231+40 TO STA 241+65
STA 247+10 TO STA 259+00

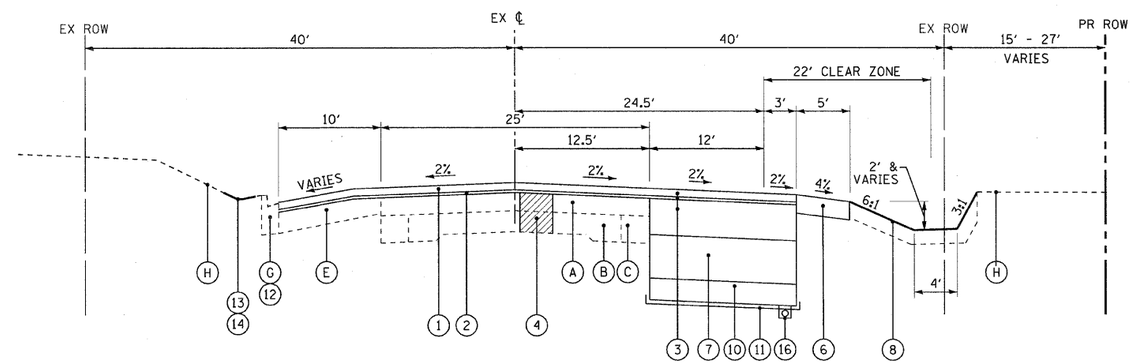

PROPOSED TYPICAL SECTION
IL ROUTE 31
STA 241+65 TO STA 247+10

MILL BEFORE PATCHING

HOT-MIX ASPHALT MIXTURE REQUIREMENTS	
MIXTURE TYPE	AIR VOIDS @ Ndes
PAVEMENT/SHOULDER RESURFACING	
POLYMERIZED HOT-MIX ASPHALT SURFACE COURSE, MIX "F", N90 (IL 9.5mm) - 2"	4% @ 90 Gyr.
POLYMERIZED LEVELING BINDER (MACHINE METHOD), IL-4.75, N50 - 1"	4% @ 50 Gyr.
PAVEMENT WIDENING	
POLYMERIZED HOT-MIX ASPHALT SURFACE COURSE, MIX "F", N90 (IL 9.5mm) - 2"	4% @ 90 Gyr.
POLYMERIZED LEVELING BINDER (MACHINE METHOD), IL-4.75, N50 - 1"	4% @ 50 Gyr.
HOT-MIX ASPHALT BASE COURSE (POLY HMA BINDER IL-19.0, N90) - 10"	4% @ 90 Gyr.
DRIVEWAY RESURFACING	
HOT-MIX ASPHALT SURFACE COURSE, MIX "D", N50 (IL 9.5 mm) - 2"	4% @ 50 Gyr.
POLYMERIZED LEVELING BINDER (MACHINE METHOD), IL-4.75, N50 - 1"	4% @ 50 Gyr.
DRIVEWAYS RECONSTRUCTION	
HOT-MIX ASPHALT SURFACE COURSE, MIX "D", N50 (IL 9.5 mm) - 2"	4% @ 50 Gyr.
HOT-MIX ASPHALT BASE COURSE (HMA BINDER IL-19.0, N50) - PE-6", CE-8"	4% @ 50 Gyr.
SHOULDER CONSTRUCTION	
HOT-MIX ASPHALT SHOULDERS, (POLY HMA BINDER IL-19.0, N90) - 8"	4% @ 90 Gyr.
PATCHING	
CLASS D PATCHES (HMA BINDER IL-19.0, N70) - TYPE I-IV - 14"	4% @ 70 Gyr.

THE UNIT WEIGHT USED TO CALCULATE ALL HMA SURFACE MIXTURE QUANTITIES IS 112 LBS/SQ YD/IN.

THE "AC TYPE" FOR POLYMERIZED HMA MIXES SHALL BE "SBS/SBR PG 70-22" AND FOR NON-POLYMERIZED HMA THE "AC TYPE" SHALL BE "PG 64-22" UNLESS MODIFIED BY THE DISTRICT ONE SPECIAL PROVISIONS.

FOR "PERCENT OF RAP" SEE DISTRICT ONE SPECIAL PROVISIONS.

TREATMENT RECOMMENDATIONS

LOCATIONS	TREATMENT
STA 242+50 TO 245+50	6" PGE,S
STA 8+11 TO 9+66	6" PGE,S
STA 251+50 TO 254+50	6" PGE,S

•• POROUS GRANULAR EMBANKMENT, SUBGRADE (PGES) HAS BEEN PROVIDED FOR USE AT THE LOCATIONS INDICATED FOR SOILS THAT TEND TO BE UNSUITABLE OR UNSTABLE. THE ACTUAL NEED FOR USE OF PGE,S SHOULD BE DETERMINED IN THE FIELD AT THE TIME OF CONSTRUCTION BY A QUALIFIED SOILS INSPECTOR. AFTER EXCAVATION TO ROUGH SUBGRADE ELEVATION, THE ENGINEER OR SOILS INSPECTOR SHOULD OBSERVE THE BEHAVOIR OF THE ENTIRE EXPOSED SUBGRADE UNDER THE TRAFFIC OF HEAVY RUBBER-TIRED CONSTRCTION EQUIPMENT SUCH AS MOTOR GRADERS OR FULLY-LOADED DUMP TRUCKS. ALL POTENTIALLY UNSTABLE SOIL SHOULD BE TESTED WITH A STATIC CONE PENETROMETER AND TREATED IN ACCORDANCE WITH ARTICLE 301.04 OF THE STANDARD SPECIFICATIONS AND THE UNDERCUT GUIDELINES IN THE IDOT SUBGRADE STABILITY MANUAL (SSM). ANY PGE,S OR FABRIC NOT NEEDED AT THE TIME OF CONSTRUCTION SHOULD BE DELETED FROM THE CONTRACT WITH NO ADDITIONAL COMPENSATION DUE THE CONTRACTOR.

EXISTING LEGEND

- (A) HOT-MIX ASPHALT PAVEMENT, 7 1/2"(±)
- (B) PCC PAVEMENT, 9"(±)
- (C) HOT-MIX ASPHALT BASE COURSE, 9"(±)
- (D) RESERVED
- (E) HOT-MIX ASPHALT SHOULDER, 8"±
- (F) AGGREGATE SHOULDER, 6"±
- (G) COMBINATION CONCRETE CURB AND GUTTER, TYPE B-6.12
- (H) GROUND SURFACE
- [I] HOT-MIX ASPHALT SURFACE REMOVAL, 3"
- [J] RESERVED
- [K] AGGREGATE SHOULDER REMOVAL (PAID AS EARTH EXCAVATION)
- [L] PAVED SHOULDER REMOVAL
- [M] REMOVAL AND DISPOSAL OF UNSUITABLE MATERIALS ••
- ▨ ITEM TO BE REMOVED

PROPOSED LEGEND

1. POLYMERIZED HOT-MIX ASPHALT SURFACE COURSE, MIX "F", N90 - 2"
2. POLYMERIZED LEVELING BINDER (MACHINE METHOD), IL-4.75, N50 - 1"
3. HOT-MIX ASPHALT PAVEMENT
   POLYMERIZED HOT-MIX ASPHALT SURFACE COURSE, MIX "F", N90 - 2"
   POLYMERIZED LEVELING BINDER (MACHINE METHOD), IL-4.75, N50 - 1"
   HOT-MIX ASPHALT BASE COURSE (POLY HMA BINDER IL-19.0, N90) - 10"
4. CLASS D PATCHES - TYPE I-IV-14" (AS DETERMINED BY THE ENGINEER)
5. HOT-MIX ASPHALT SHOULDERS, 8"
6. AGGREGATE SHOULDER, TYPE B 6"
7. AGGREGATE SUBGRADE 12"
8. TOPSOIL FURNISH AND PLACE 4"; SEEDING, CLASS 2A, FERTIZILER; EROSION CONTROL BLANKET
9. AGGREGATE WEDGE SHOULDER, TYPE B
10. POROUS GRANULAR EMBANKMENT, SUBGRADE•• (AS DETERMINED BY THE ENGINEER) - 6" MIN.
11. GEOTECHNICAL FABRIC FOR GROUND STABILIZATION (AS DETERMINED BY THE ENGINEER)
12. COMBINATION CONCRETE CURB AND GUTTER REMOVAL AND REPLACEMENT (AS DETERMINED BY THE ENGINEER)
13. GRADING AND SHAPING DITCHES (AS DETERMINED BY THE ENGINEER)
14. TOPSOIL FURNISH AND PLACE 4"; SEEDING, CLASS 1A; FERTILIZER; EROSION CONTROL BLANKET
15. GRADING AND SHAPING SHOULDERS
16. PIPE UNDERDRAINS 4"

COPYRIGHT © 2010, BY BAXTER & WOODMAN, INC.
STATE OF ILLINOIS - PROFESSIONAL DESIGN FIRM
LICENSE NO. 184-001005 EXPIRES 4/30/2011
48E3E
...\WORKDIR\ver\WDF29x34.dgn
...\IDOT\STYLES\IDOT.cfg
i:\Crystal\Cole\LDOT\100153 \40-Design\WD-05\CADD-SURVEY\DRAWINGS\DGNS\100153_W05-TYPSEC.dgn
11:34 AM
7/16/2010

BAXTER & WOODMAN Consulting Engineers

DESIGNED - DJS	REVISED -1-28-11 PER IDOT REVIEW	
DRAWN - CJC	REVISED -3-14-11 PER IDOT REVIEW	
CHECKED - LDH	REVISED -	
DATE - 09/10/10	FILE - 100153_W05-TYPSEC.sht	

STATE OF ILLINOIS
DEPARTMENT OF TRANSPORTATION

IL ROUTE 31 – AMES ROAD TO EDGEWOOD ROAD
TYPICAL SECTIONS

SCALE: STA. TO STA.

F.A.P. RTE.	SECTION	COUNTY	TOTAL SHEETS	SHEET NO.
336	2010-049-N	MCHENRY	50	6
		CONTRACT NO. 60L25		
FED. ROAD DIST. NO. 1	ILLINOIS			