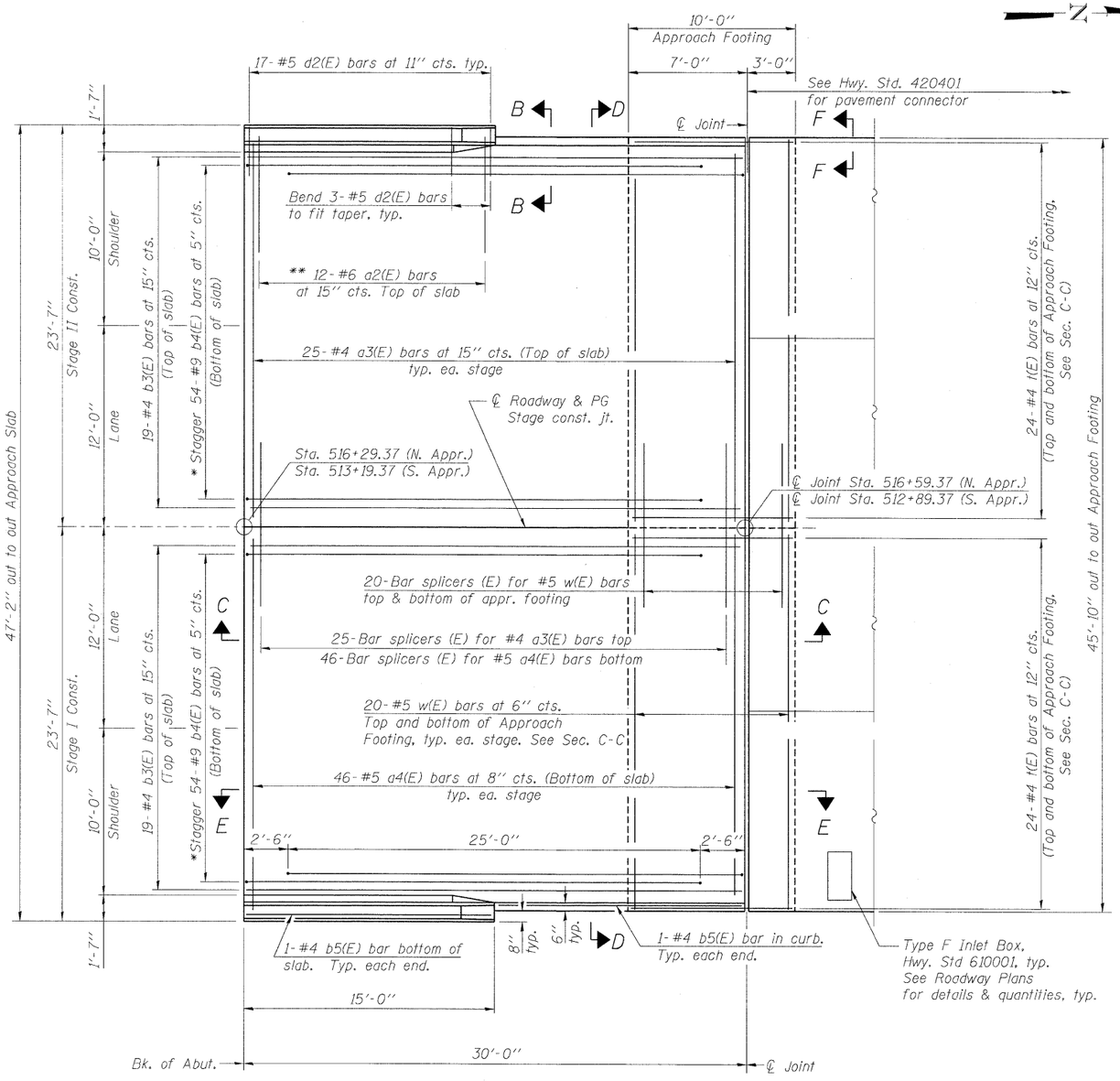

* Tilt #9 b4(E) bars as required to maintain clearance.
** Space between a3(E) bars, typ. ea. parapet.

PLAN

N. Appr. shown
S. Appr. similar by rotation & as noted

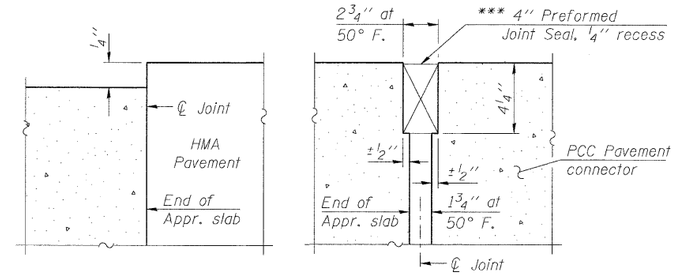

FLEXIBLE PAVEMENT

RIGID PAVEMENT

*** Cost included with Concrete Superstructure.

DETAIL A

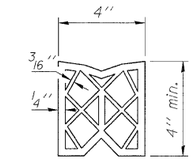

PREFORMED
JOINT SEAL

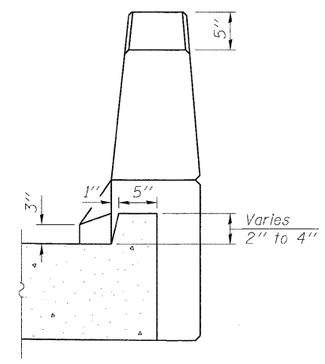

VIEW B-B

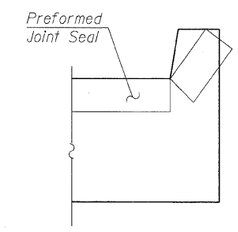

VIEW F-F

Angle Preformed Joint Seal at 45°
at curbs when req'd for drainage.

NOTES

1. See sheet 14 of 26 for Sections C-C & D-D and View E-E.
2. See sheet 14 of 26 for location of Detail A on Section C-C.
3. a3(E) and a4(E) bar spacings measured along ℄ Rdwy.

T:\5815-Phase II\IL-26\Structs\dgn\IL2.dgn\0710097-64D16-013-ASI.dgn

LOCHNER H.W. LOCHNER, INC. CONSULTING ENGINEERS AND PLANNERS 20 N. WACKER DRIVE, SUITE 1200 CHICAGO, ILLINOIS 60606	USER NAME =	DESIGNED - GWS	REVISED -	STATE OF ILLINOIS DEPARTMENT OF TRANSPORTATION	BRIDGE APPROACH SLAB DETAILS I STRUCTURE NO. 071-0097	F.A.P. RTE.	SECTION	COUNTY	TOTAL SHEETS / SHEET NO.
	FILE NAME = 0710097-64D16-013-ASI.dgn	CHECKED - LJB	REVISED -			742	38VBR-1	OGLE	87 / 74
	PLOT SCALE =	DRAWN - EF	REVISED -					CONTRACT NO. 64D16	
	PLOT DATE =	CHECKED - LJB	REVISED -		SHEET NO. 13 OF 26 SHEETS		ILLINOIS	FED. AID PROJECT	