CONTRACT NO. 66671

F.A.P. RTE.	SECTION	COUNTY	TOTAL SHEETS	SHEET NO.
326	*	KENDALL	931	619
STA. N/A		TO STA. N/A		
FED. ROAD DIST. NO. 5		ILLINOIS	FED. AID PROJECT	

*(5CS, 13C, 108, 109)R

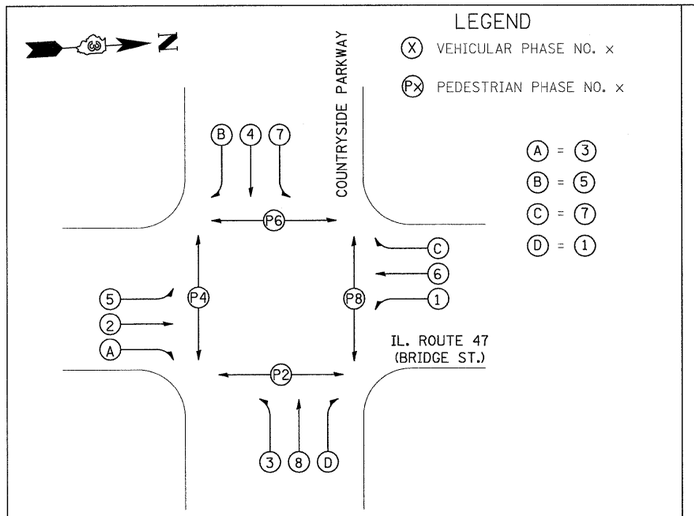

PHASE DESIGNATION DIAGRAM

REMOVE EXISTING TRAFFIC SIGNAL EQUIPMENT 1 EACH

THE FOLLOWING TRAFFIC SIGNAL EQUIPMENT SHALL BE REMOVED AND REMAIN THE PROPERTY OF THE CONTRACTOR, IF IT IS NOT BEING USED FOR THE TEMPORARY TRAFFIC SIGNAL INSTALLATION.

4 EACH MAST ARM ASSEMBLY AND POLE
5 EACH SIGNAL POST

ALL REMAINING REMOVAL ITEMS EXCEPT AS SPECIFIED BELOW SHALL BE REMOVED AND DELIVERED BY THE CONTRACTOR TO THE CITY OF YORKVILLE, 610 TOWER LANE, YORKVILLE, IL.

THE FOLLOWING ITEMS SHALL BE REMOVED AND DISPOSED OF BY THE CONTRACTOR OFF THE RIGHT-OF-WAY. THE SALVAGE VALUE OF THIS EQUIPMENT SHALL BE REFLECTED IN THE UNIT BID PRICE OF REMOVE EXISTING TRAFFIC SIGNAL EQUIPMENT.

1 EACH SERVICE INSTALLATION
ALL WIRES

SCHEDULE OF REMOVAL ITEMS

ITEM	LOCATION	UNIT	QUANTITIES
REMOVE EXISTING CONCRETE FOUNDATION	A, B, C, D, E, F, G, H, I, J	EACH	10
REMOVE EXISTING HANDHOLE	EH1, EH2, EH3, EH4 EH5, EH6, EH7, EH8	EACH	8

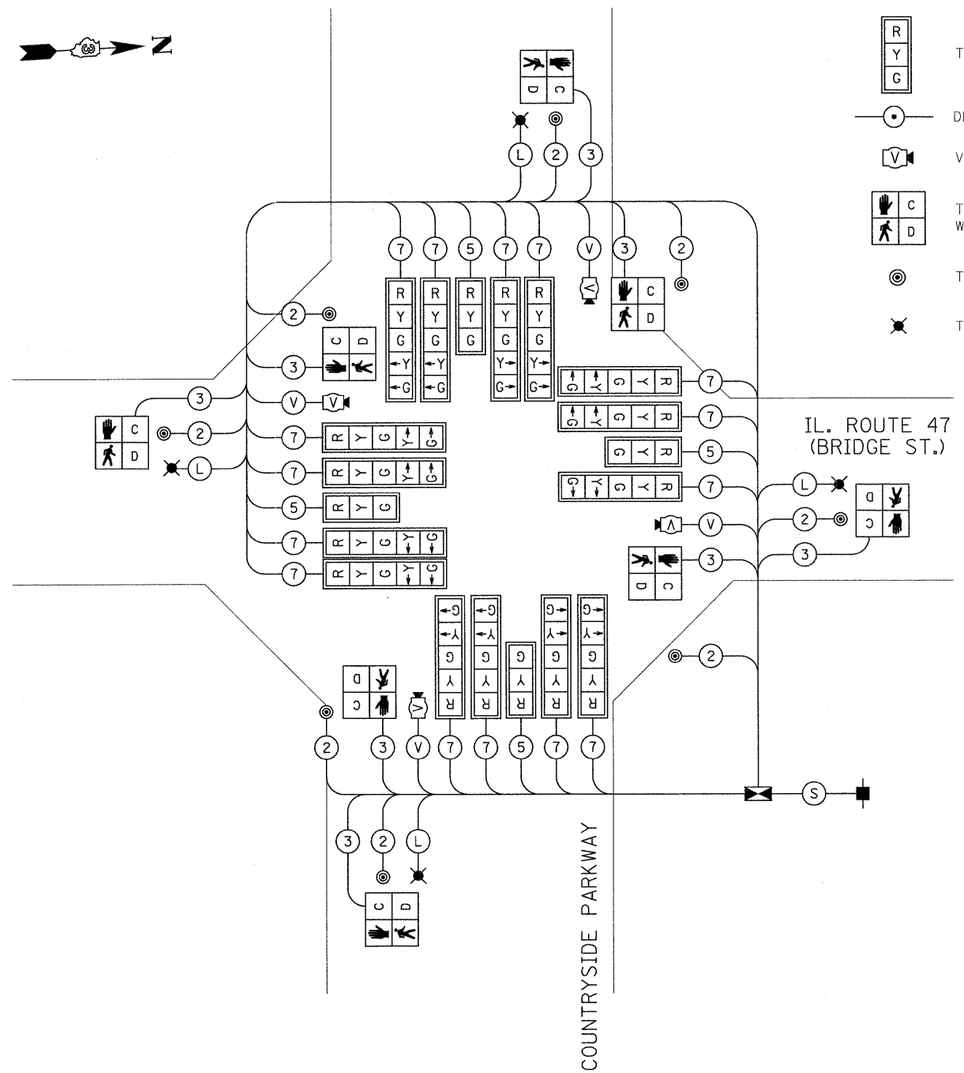

TEMPORARY CABLE DIAGRAM

TEMPORARY CABLE DIAGRAM LEGEND

- TEMPORARY CONTROLLER
- TEMPORARY SERVICE INSTALLATION
- TEMPORARY TRAFFIC SIGNAL HEAD W/ BACKPLATE (R Y G)
- DENOTES NUMBER OF CONDUCTORS
- VIDEO DETECTION SYSTEM
- TEMPORARY PEDESTRIAN SIGNAL HEAD WITH COUNTDOWN DISPLAY (C D)
- TEMPORARY PEDESTRIAN PUSH BUTTON
- TEMPORARY LUMINAIRE, SODIUM VAPOR, 400 WATT

(V) VIDEO CAMERA CABLE

6 PAIRS, TWISTED REQUIRED

3 PAIRS CONDUCTOR FOR POWER - 24V AC (AC+, AC-, GND)
1 PAIR DATA
1 PAIR COMPOSITE VIDEO
1 PAIR DETECTOR DATA

OVERALL SHIELD
MINIMUM 16AWG (PAIRS)
(TO BE INCLUDED IN THE BID PRICE FOR VEHICLE VIDEO DETECTION SYSTEM)

(S) SERVICE CABLE

ELECTRIC CABLE IN CONDUIT,
SERVICE, NO.6 2C

(L) LIGHTING CABLE

600V (XLP-TYPE USE) 3 - 1/C NO.10

REVISIONS	
NAME	DATE

ILLINOIS DEPARTMENT OF TRANSPORTATION

PROPOSED TEMPORARY CABLE DIAGRAM
IL. 47 (BRIDGE ST.)/
COUNTRYSIDE PARKWAY

SCALE: NONE — DRAWN BY: SL
DATE: MARCH, 2010 — CHECKED BY: KC

PLOT DATE = 8/11/2011
FILE NAME = h:\35122\design\618-619cp_rem.dgn
PLOT SCALE = 6.3500 m / IN.
USER NAME = USERDESCR.