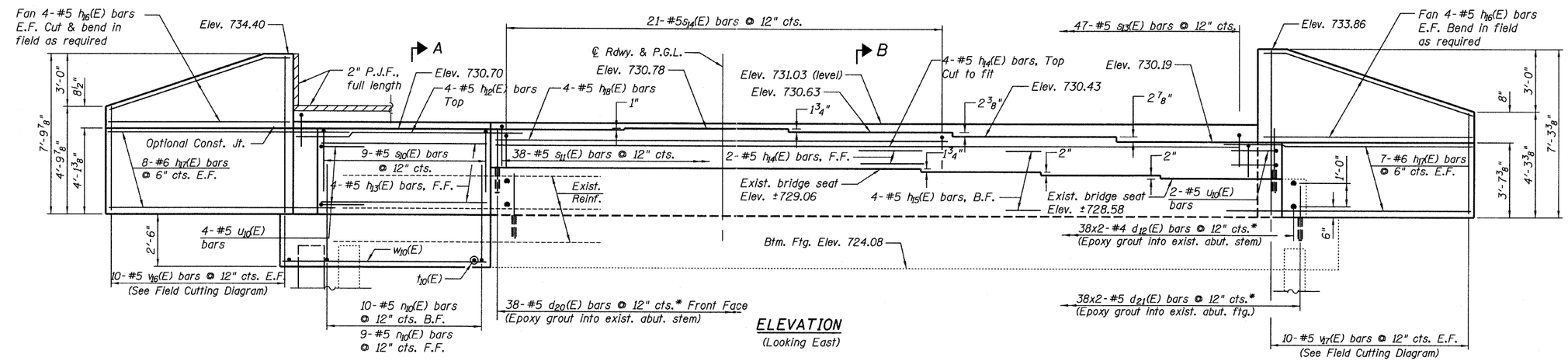

ELEVATION
(Looking East)

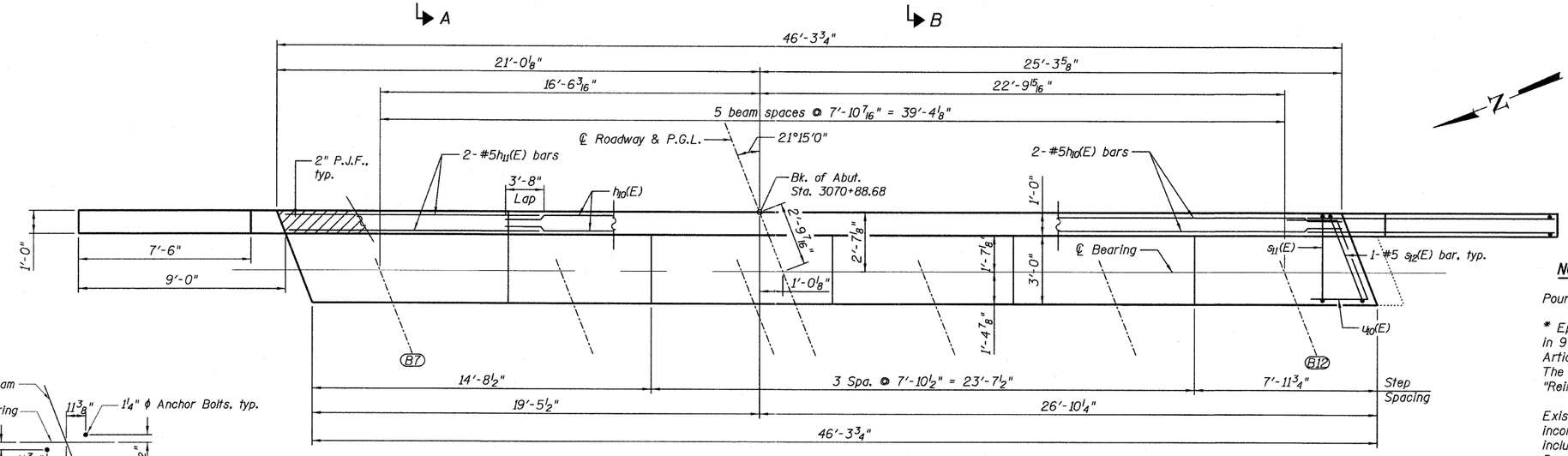

TOP PLAN

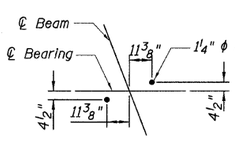

ANCHOR BOLT LAYOUT

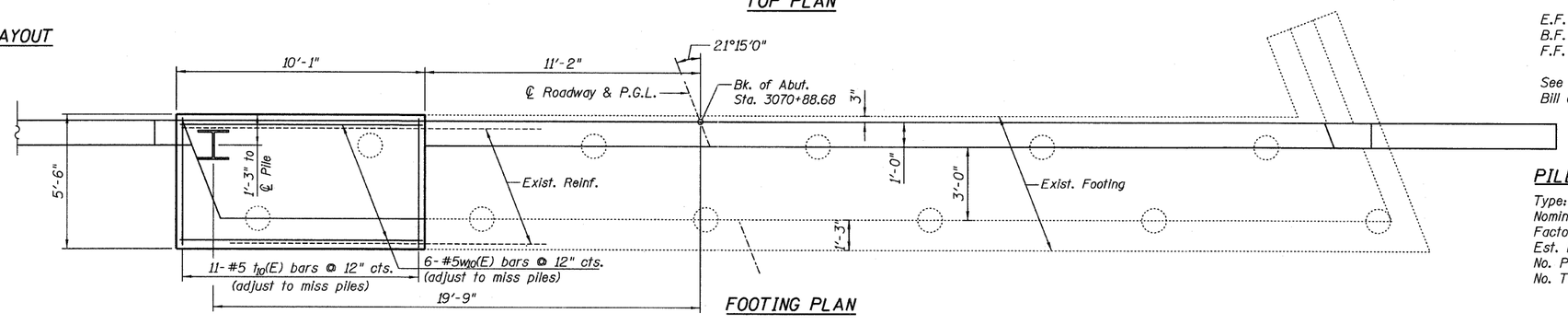

FOOTING PLAN

LAP SPLICES

Bar	Lap
#4	2'-11"
#5	3'-8"

NOTES:

Pour steps monolithically with cap.

* Epoxy Grout d_{20}(E), d_{21}(E), d_{12}(E) bars in 9" minimum drilled holes according to Article 584 of the Standard Specifications. The cost shall be included in "Reinforcement Bars, Epoxy Coated."

Existing reinforcement shall be cleaned and incorporated into the new construction. Cost included with Concrete Removal. See Removal Sheets.

E.F. - Denotes Each Face.
B.F. - Denotes Back Face
F.F. - Denotes Front Face

See sheet 20 of 37 for Section, Details, and Bill of Materials.

PILE DATA

Type: Steel HP 14x73
Nominal Required Bearing: 150 kips
Factored Resistance Available: 50 kips
Est. Length: 25'
No. Production Piles: 1
No. Test Piles: 0

FILE NAME =	USER NAME =	DESIGNED - EH	REVISED -	STATE OF ILLINOIS DEPARTMENT OF TRANSPORTATION	EAST ABUTMENT – EASTBOUND STRUCTURE NO. 006-0020 EB AND 006-0021 WB	F.A.I. RTE.	SECTION	COUNTY	TOTAL SHEETS	SHEET NO.
TY·LIN INTERNATIONAL		CHECKED - PF	REVISED -			80	(106-5)HBR-1,VBR(06-6)RS-3&I	BUREAU	249	86
	PLOT SCALE =	DRAWN - EH	REVISED -					CONTRACT NO. 66686		
	PLOT DATE = 09/13/2011	CHECKED - PF	REVISED -		SHEET NO. 19 OF 37 SHEETS			ILLINOIS FED. AID PROJECT		

$FILE$ $TIME$ $DATE$