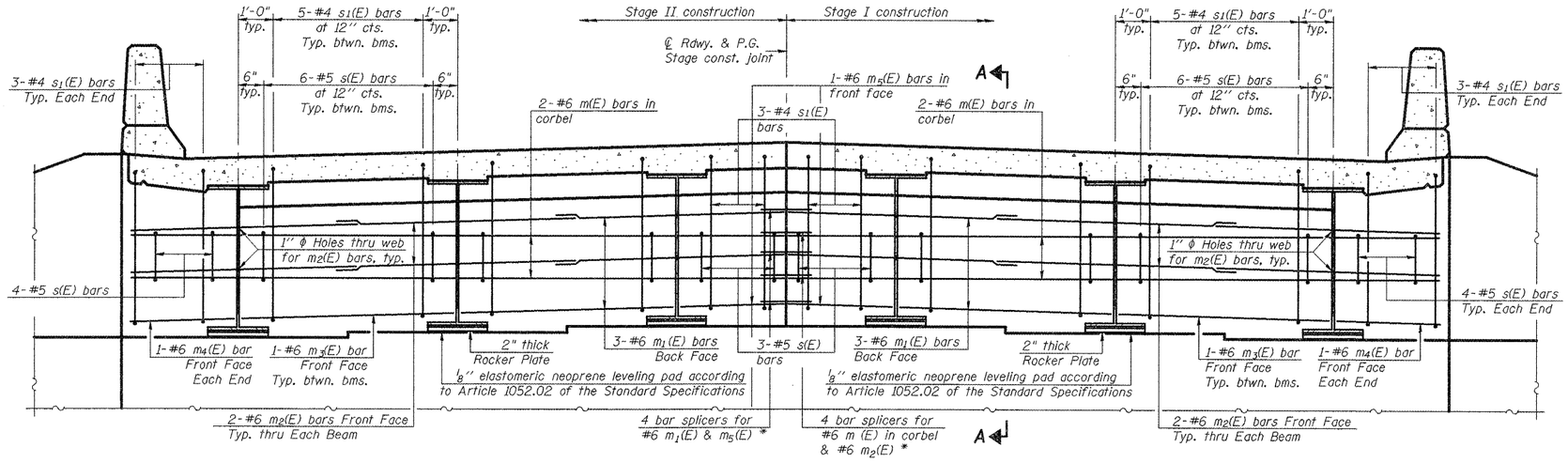

DIAPHRAGM ELEVATION AT ABUTMENTS

(South Abutment shown looking South)

Notes:

Reinforcement bars in diaphragm are billed with superstructure on sheet 7 of 15.

Concrete in diaphragm is included with Concrete Superstructure on sheet 7 of 15.

For details of bars s(E) & s (E) see sheet 7 of 15.

The s(E) and s_1(E) bars shall be placed parallel to the beams. Spacing for these bars shall be at right angles to the beams.

* For bar splicer details, see sheet 11 of 15.

** Included in the cost of Concrete Superstructure.

Anchor bolts shall be ASTM F1554 all-thread (or an Engineer-approved alternate material) of the grade(s) and diameter(s) specified. ASTM A307 Grade C anchor bolts may be used in lieu of ASTM F1554 Grade 36 (Fy=36ksi). The corresponding specified grade of AASHTO M314 anchor bolts may be used in lieu of ASTM F1554.

Anchor bolts at fixed bearings may be either cast in place or installed in holes drilled after the supported member is in place.

Drilled and set anchor bolts shall be installed according to Article 521.06 of the Standard Specifications.

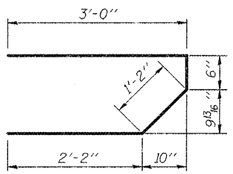

BAR s(E)

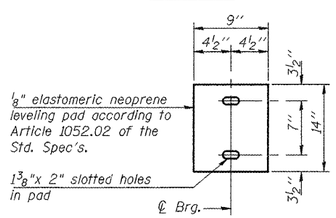

PLAN-ELASTOMERIC NEOPRENE LEVELING PAD

MIN. BAR LAPS

#6 bar = 3'-7"

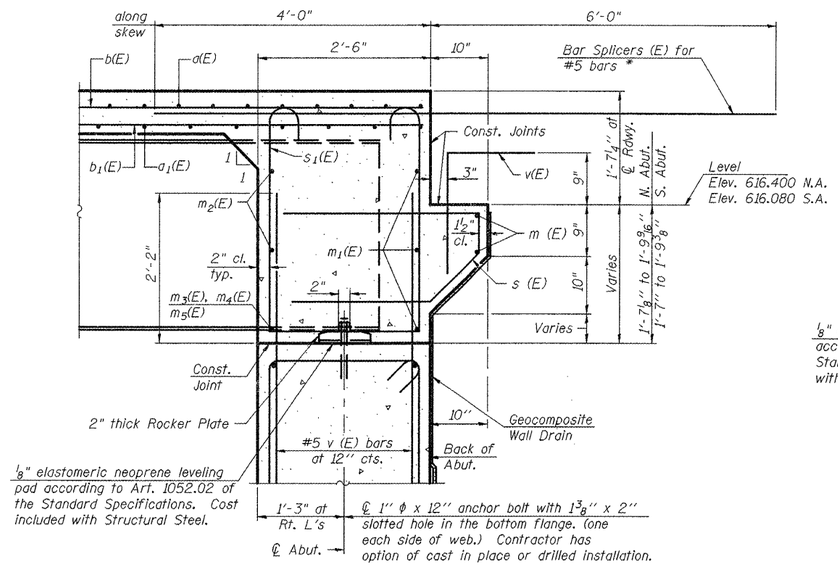

SECTION A-A

Dimensions at right angles to abutment, except as shown.

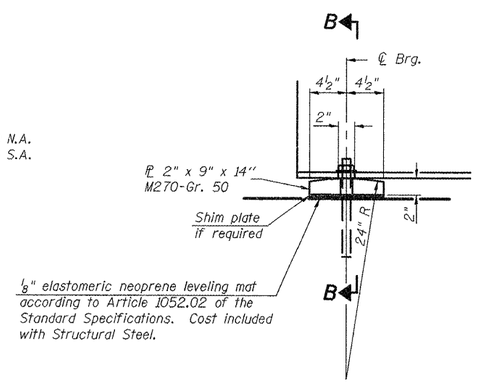

ELEVATION AT ABUTMENT

MIN. BAR LAP

#6 bar = 3'-7"

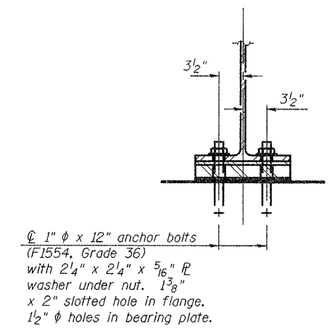

SECTION B-B

FIXED BEARING

Notes:

Anchor bolts at fixed bearings may be built into the masonry.

See sheet 10 for Anchor Bolt installation.

HDR Engineering, Inc.

FILE NAME = D468083-sht-plan.dgn	USER NAME = johnsontv	DESIGNED -	REVISED -	STATE OF ILLINOIS DEPARTMENT OF TRANSPORTATION	DIAPHRAGM DETAILS IL 94 OVER DIXON CREEK S.N. 036-0054	F.A.P. RTE.	SECTION	COUNTY	TOTAL SHEETS	SHEET NO.
		DRAWN -	REVISED -			534	109B (BR2)	HENDERSON	88	48
	PLOT SCALE = 100.4566 ' / in.	CHECKED -	REVISED -					CONTRACT NO. 68083		
	PLOT DATE = 8/26/2011	DATE -	REVISED -		SCALE: / SHEET NO. 8 OF 15 SHEETS / STA. 347+36			ILLINOIS FED. AID PROJECT		