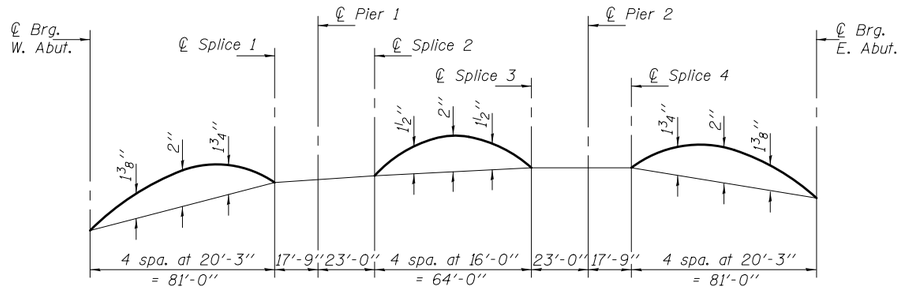

CAMBER DIAGRAM

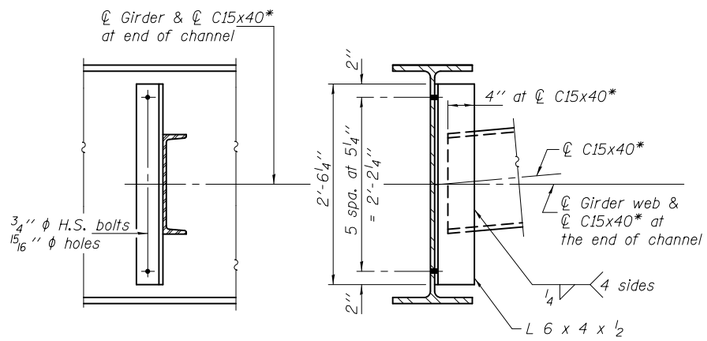

DIAPHRAGM D

(70 Required)

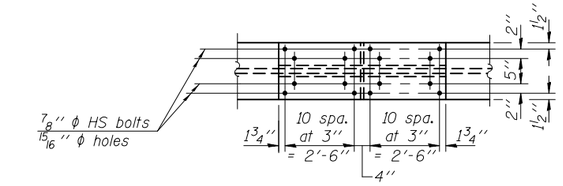

PLAN - TOP FLANGE

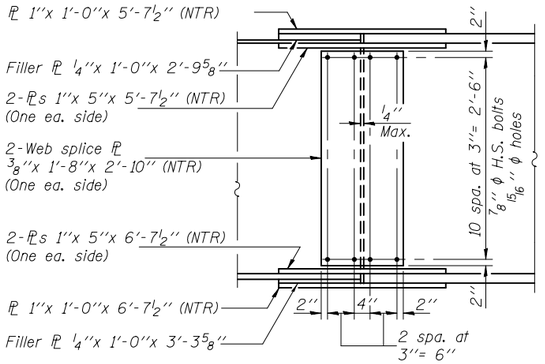

ELEVATION

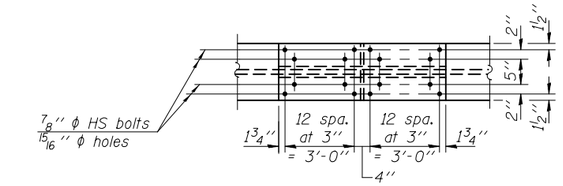

PLAN - BOTTOM FLANGE

SPLICES 1 & 4

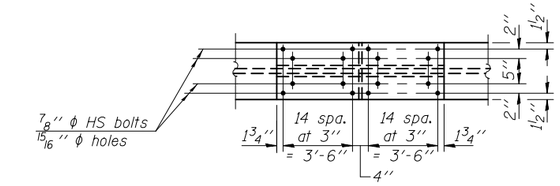

PLAN - TOP FLANGE

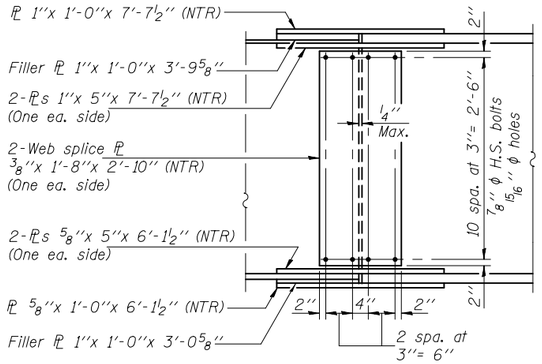

ELEVATION

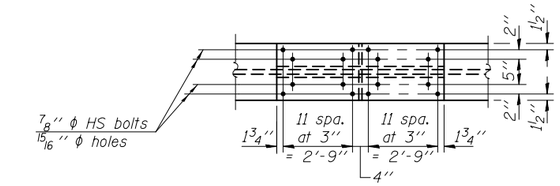

PLAN - BOTTOM FLANGE

SPLICES 2 & 3

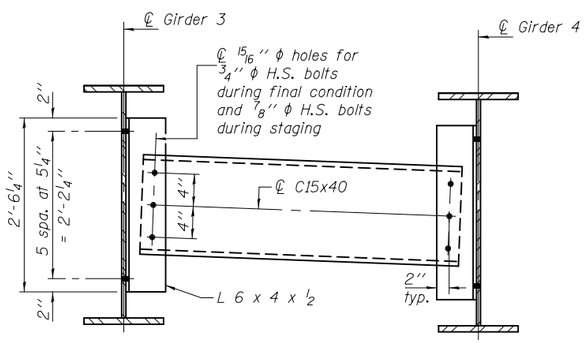

DIAPHRAGM D2

(15 Required)

Install only one 7/8" ϕ H.S. bolt in center hole at each end of Diaphragm D2. The bolts shall be finger tightened prior to deck pour to permit rotation of diaphragm D2. Install 3/4" ϕ H.S. bolts and fully tighten after Stage II deck pour is complete.

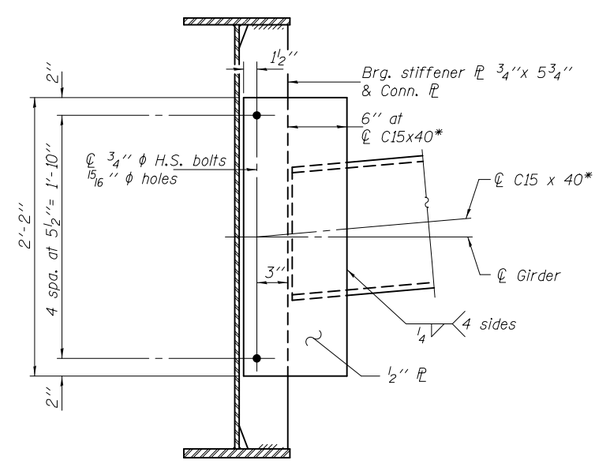

DIAPHRAGM D1

(10 Required)

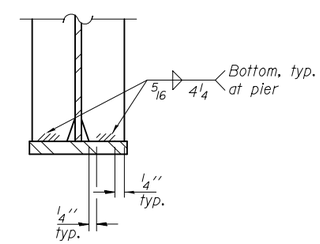

DETAIL A

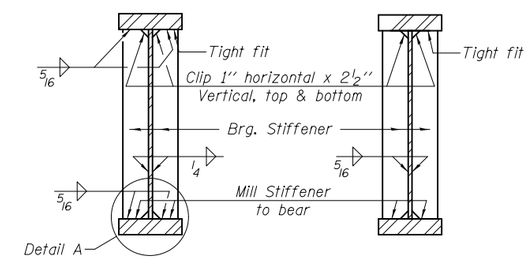

SECTION AT PIER

SECTION AT ABUTMENT

Notes:

Load carrying components designated "NTR" shall conform to the impact testing requirements given in the special provision for Structural Steel for Bridges.

Two hardened washers shall be required for all oversized holes in diaphragms.

*Alternate channel C15x50 is permitted to facilitate material acquisition. Calculated weight of structural steel is based on lighter section. The alternate, if utilized, shall be provided at no cost to the department.

DESIGNED - Michael D. Rolape	EXAMINED Thomas J. Domagalski, ENGINEER OF BRIDGE DESIGN	DATE - OCTOBER 5, 2011	STATE OF ILLINOIS DEPARTMENT OF TRANSPORTATION	STRUCTURAL STEEL DETAILS STRUCTURE NO. 057-0244
CHECKED - Nicholas R. Barnett				
DRAWN - h.t. duong	PASSED S. Carl Puzey, ENGINEER OF BRIDGES AND STRUCTURES			SHEET NO. 17 OF 30 SHEETS
CHECKED - MDR/NRB				

F.A.P. RTE.	SECTION	COUNTY	TOTAL SHEETS	SHEET NO.
315	121 BR-2	MCLEAN	144	65
		CONTRACT NO. 70552		
		ILLINOIS FED. AID PROJECT		