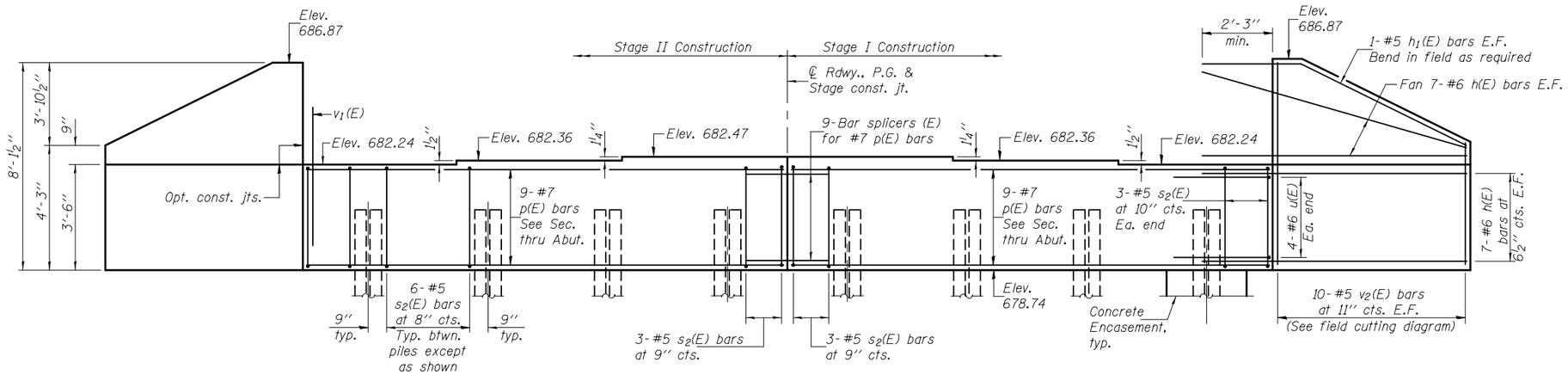

ELEVATION
(Looking east)

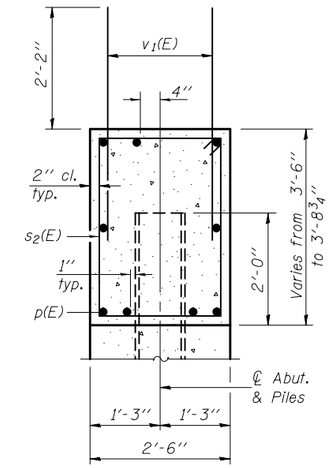

SEC. THRU ABUT.

PILE DATA

Type: Steel HP14x73
Nominal Required Bearing: 287 Kips
Factored Resistance Available: 158 Kips
Est. Length: 76'
No. Production Piles: 7
No. Test Piles: 1

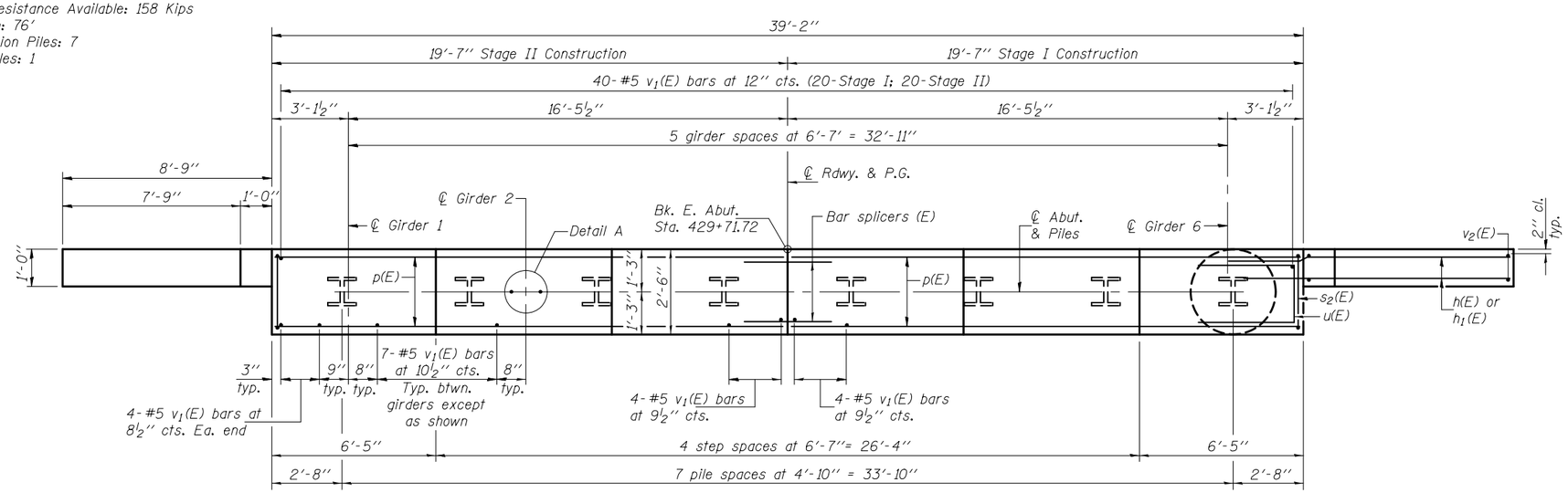

PLAN

BILL OF MATERIAL

Bar	No.	Size	Length	Shape
h(E)	56	#6	10'-10''	
h1(E)	4	#5	11'-10''	
p(E)	18	#7	19'-3''	
s2(E)	48	#5	11'-7''	
u(E)	8	#6	9'-9''	
v1(E)	84	#5	4'-4''	
v2(E)	20	#5	11'-8''	
Structure Excavation			Cu. Yd.	93
Concrete Structures			Cu. Yd.	17.4
Reinforcement Bars, Epoxy Coated			Pound	2990
Furnishing Steel Piles HP14x73			Foot	532
Driving Piles			Foot	532
Test Pile Steel HP14x73			Each	1
Concrete Encasement			Cu. Yd.	4.4
Anchor Bolts, 1'' ϕ			Each	12

Notes: Pour steps monolithically with cap.
For details of piles and concrete encasement, see sheet 24 of 30.
For bar splicer details, see sheet 23 of 30.

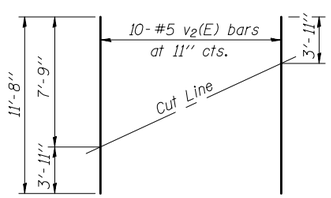

FIELD CUTTING DIAGRAM
Order v2(E) full length. Cut as shown and use remainder of bars in opposite face.

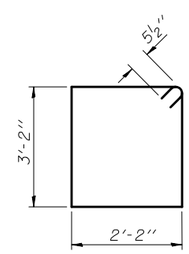

BAR s2(E)

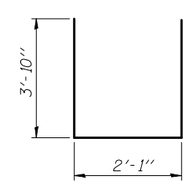

BAR u(E)

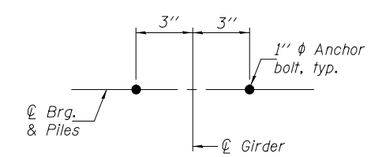

DETAIL A

DESIGNED - Michael D. Rolape	EXAMINED	ENGINEER OF BRIDGE DESIGN	DATE - OCTOBER 5, 2011	STATE OF ILLINOIS DEPARTMENT OF TRANSPORTATION	EAST ABUTMENT STRUCTURE NO. 057-0244	F.A.P. RTE.	SECTION	COUNTY	TOTAL SHEETS / SHEET NO.
CHECKED - Nicholas R. Barnett						315	121 BR-2	MCLEAN	144 / 68
DRAWN - h.t. duong	PASSED	ENGINEER OF BRIDGES AND STRUCTURES			SHEET NO. 20 OF 30 SHEETS			CONTRACT NO. 70552	
CHECKED - MDR/NRB								ILLINOIS FED. AID PROJECT	