EXISTING DECK CROSS SECTION

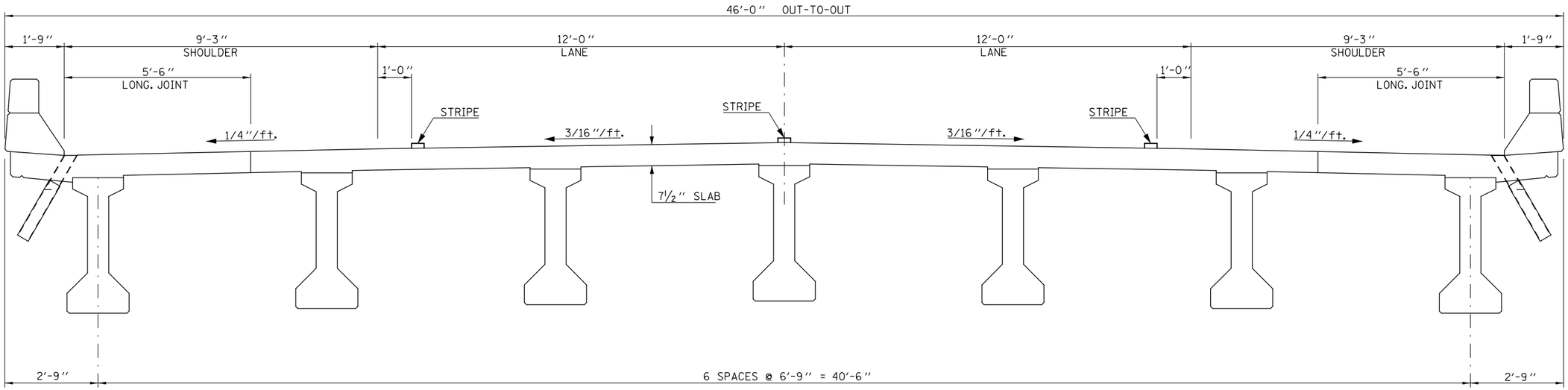

PROPOSED DECK CROSS SECTION

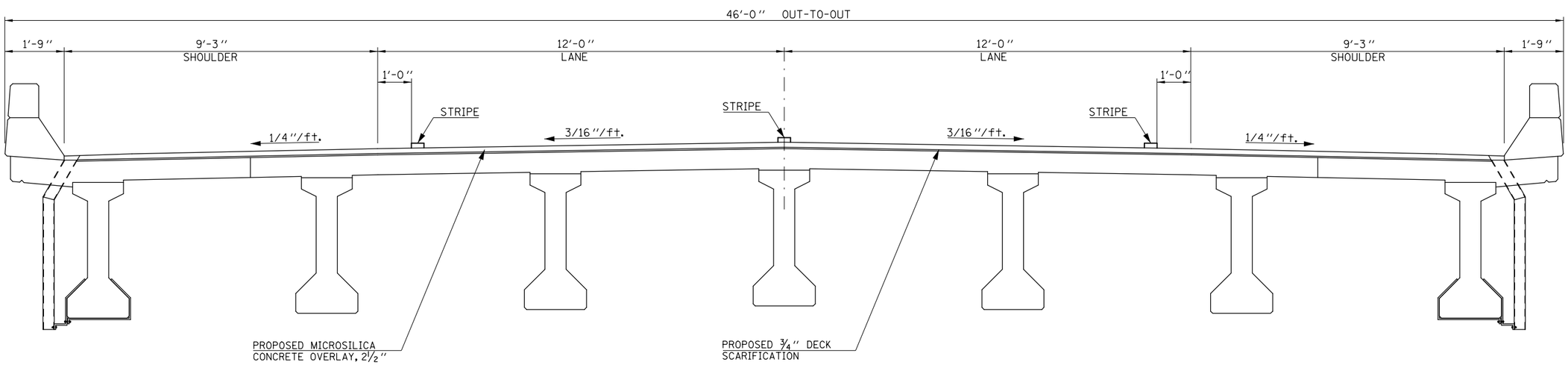

FILE NAME = c:\pw_work\pwidot\simsgm\d0132144\D570596-sht-Strucure Repair Plans.dgn	USER NAME = simsgm	DESIGNED - GMS	REVISED -	STATE OF ILLINOIS DEPARTMENT OF TRANSPORTATION	DECK CROSS SECTIONS S.N. 092-0144	F.A.P. RTE. 729	SECTION 38BR-1	COUNTY VERMILION	TOTAL SHEETS 25 / SHEET NO. 8
	PLOT SCALE = 40.0001 ' / in.	DRAWN - GMS	REVISED -					CONTRACT NO. 70596	
	PLOT DATE = 6/14/2011	CHECKED -	REVISED -						
		DATE -	REVISED -		SCALE: SHEET NO. 5 OF 18 SHEETS STA. TO STA.	FED. ROAD DIST. NO.	ILLINOIS	FED. AID PROJECT	