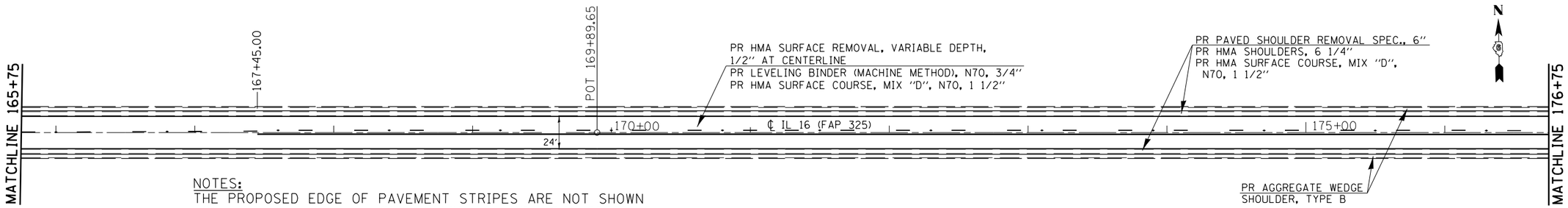

NOTES:
THE PROPOSED EDGE OF PAVEMENT STRIPES ARE NOT SHOWN ON THIS PLAN SHEET. SEE SCHEDULES FOR E.O.P. STRIPING AND OTHER PAVEMENT MARKING LOCATIONS.
WIDTH OF PROPOSED SHOULDER REMOVAL AND HMA SHOULDERS IS 4' UNLESS OTHERWIZE STATED WITHIN THESE PLANS.
WIDTH OF PROPOSED AGGREGATE SHOULDER WEDGE, TYPE B IS 3'-0".
SEE SIDEROAD AND ENTRANCE SCHEDULES FOR THEIR PROPOSED IMPROVEMENT DETAILS.

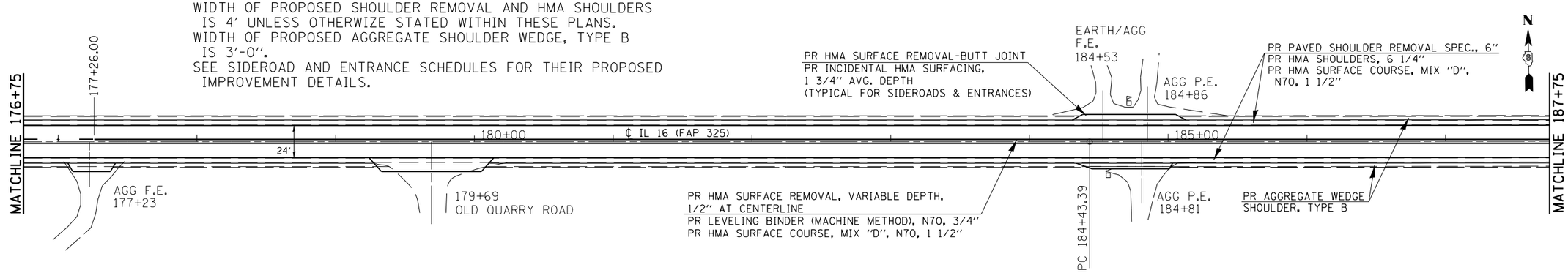

EXIST. CURVE191
PI STA. =191+18.40
Δ =0° 18' 04" (LT)
D =0° 01' 20"
R =256,882.82'
T =675.01'
L =1,350.02'

E =0.89'
e = -----
T.R. = -----
S.E. RUN = -----
P.C. STA. =184+43.39
P.T. STA. =197+93.41

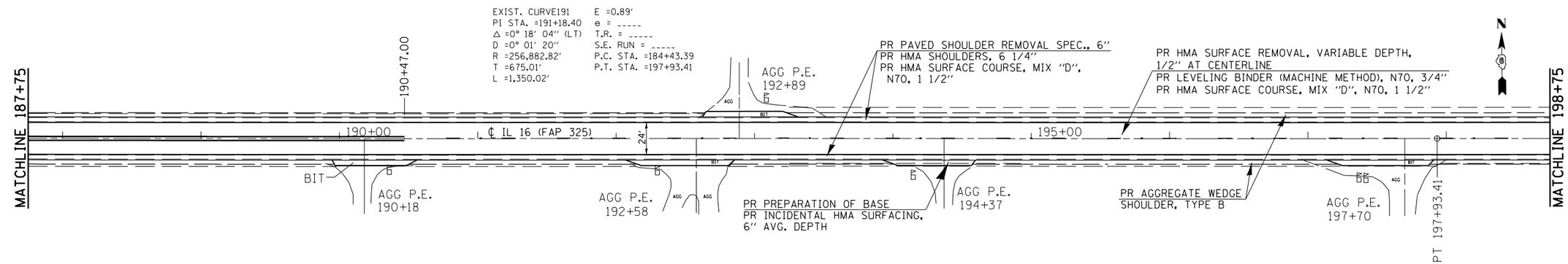

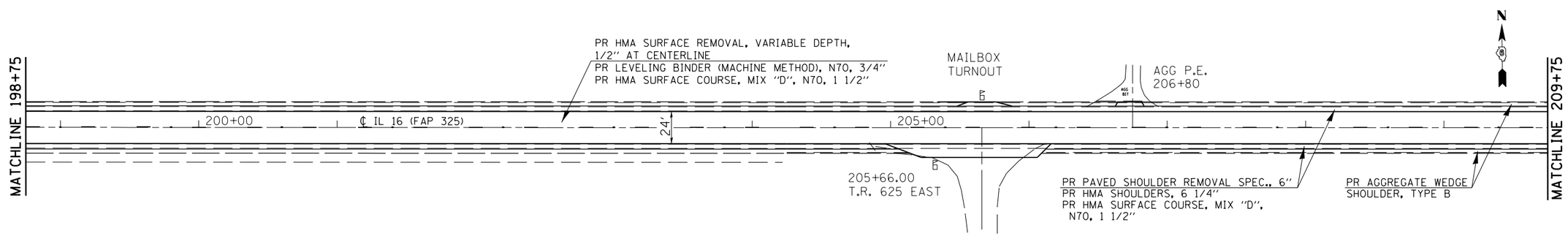

•- 325, 42
••- (15, 21)RS-7, 22RS-4, 24RS-8

FILE NAME = c:\pw_work\pwidot\sparksgw\d0222005\D672D67-sht-plan.dgn	USER NAME = sparksgw	DESIGNED - RTS	REVISED -	STATE OF ILLINOIS DEPARTMENT OF TRANSPORTATION	PLAN SHEET (RURAL)	F.A.P. RTE.	SECTION	COUNTY	TOTAL SHEETS	SHEET NO.
	PLOT SCALE = 40.0000 ' / in.	DRAWN - RTS	REVISED -			•	••	MONTGOMERY	80	46
	PLOT DATE = Aug-25-2011 10:16:05AM	CHECKED -	REVISED -			CONTRACT NO. 72D67				
		DATE - 06-15-11	REVISED -		SCALE: SHEET NO. 6 OF 15 SHEETS STA. TO STA.	FED. ROAD DIST. NO.	ILLINOIS	FED. AID PROJECT		