STATE OF ILLINOIS
DEPARTMENT OF TRANSPORTATION

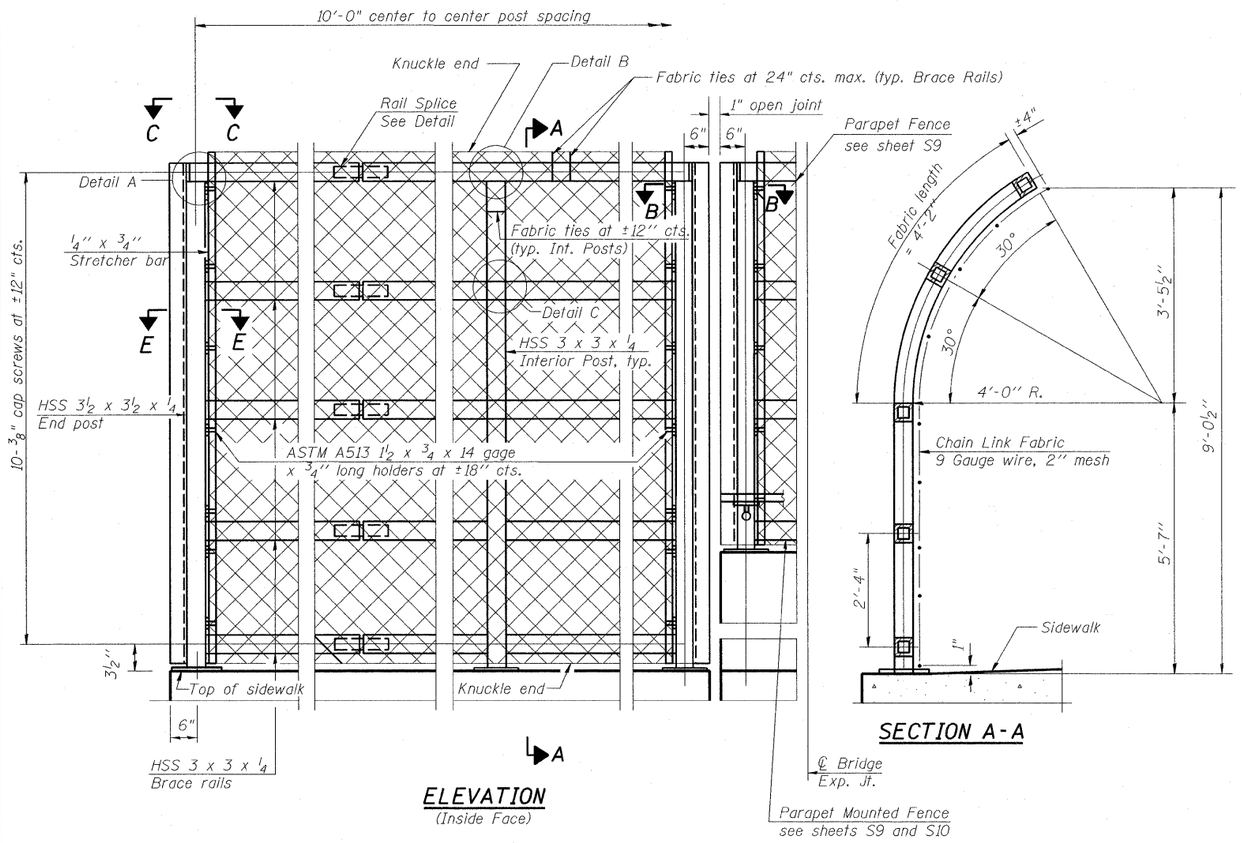

ELEVATION
(Inside Face)

SECTION A-A

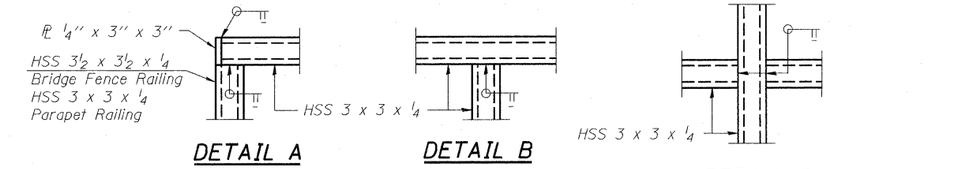

DETAIL A DETAIL B DETAIL C

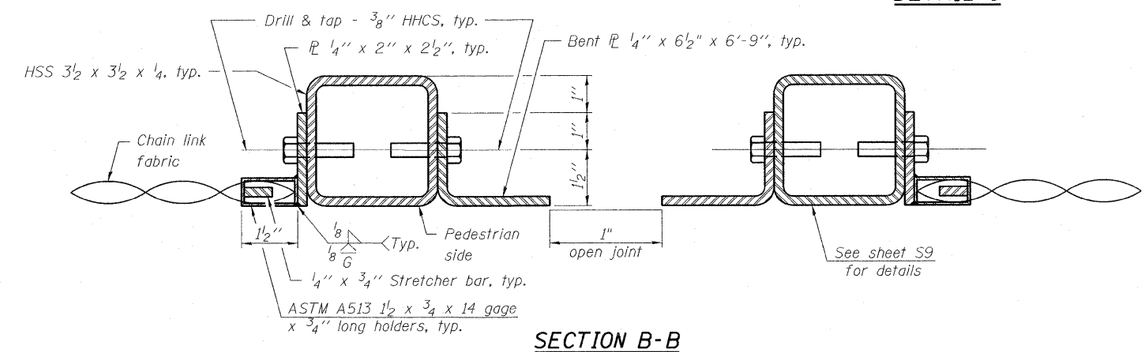

SECTION B-B

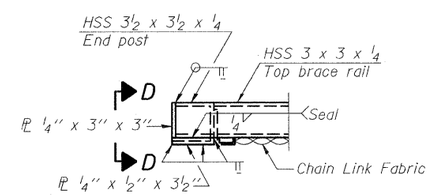

VIEW C-C

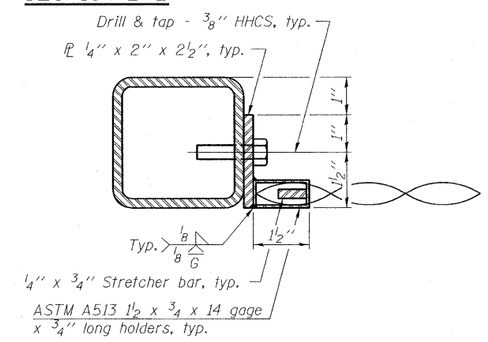

SECTION E-E

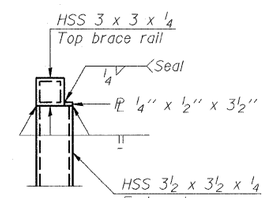

VIEW D-D

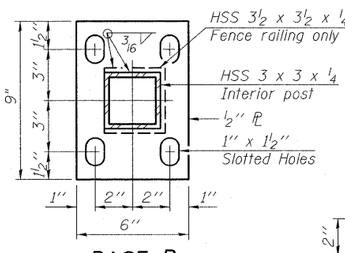

BASE PL

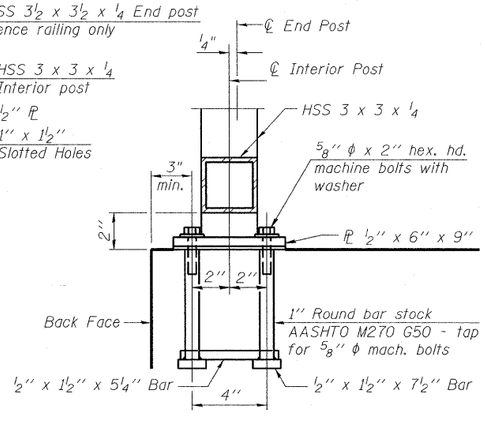

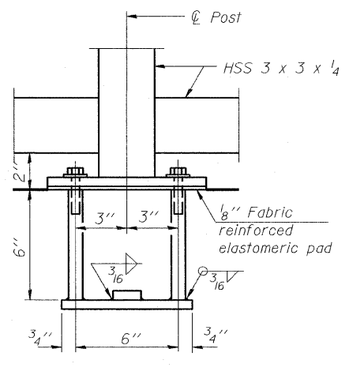

EMBEDDED ANCHOR BOLT DETAILS

Use this detail for posts set into new concrete. Embed anchor bolts and plates into new concrete. Work this detail with sheet S8.

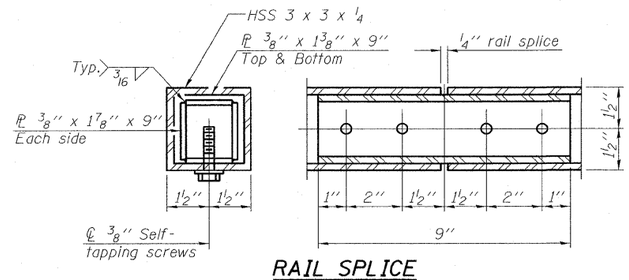

RAIL SPLICE

BILL OF MATERIAL

Item	Unit	Quantity
Bridge Fence Railing (Sidewalk)	Foot	341

NOTES:

1. All steel rail elements shall be galvanized according to Article 509.05 of the Standard Specifications.
2. Removal of existing pedestrian fence is included in cost for Concrete Removal.

PEDESTRIAN FENCE
STRUCTURE NO. 082-0099

DESIGNED	- DEV
CHECKED	- EJO
DRAWN	- DEV
CHECKED	- EJO

SHEET NO.	F.A.I. RTE.	SECTION	COUNTY	TOTAL SHEETS	SHEET NO.
S6	64	82-1-3HB, 82-2N, 82-1-12RS	ST. CLAIR	352	244
S20 SHEETS	F.A.U. 9166 / F.A.U. 9180		CONTRACT NO. 76C51		
	FED. ROAD DIST. NO.	ILLINOIS	FED. AID PROJECT		

03/31/2011 082-0099_76C51_06_BridgeFence.dgn