STATE OF ILLINOIS
DEPARTMENT OF TRANSPORTATION

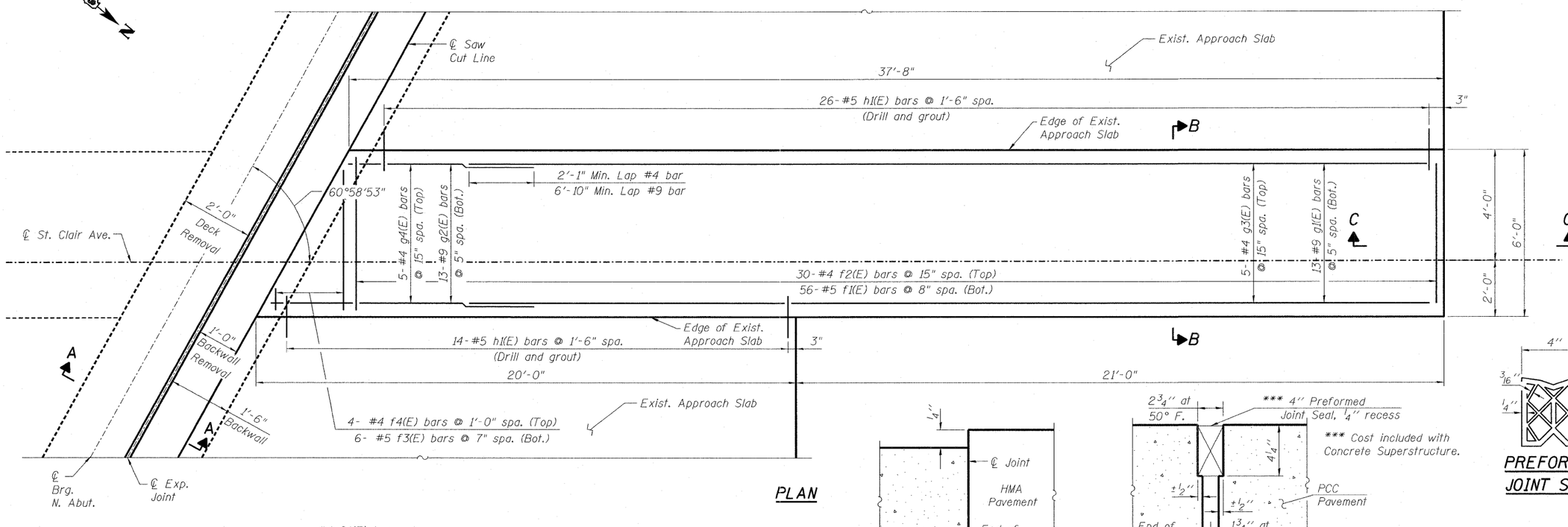

PLAN

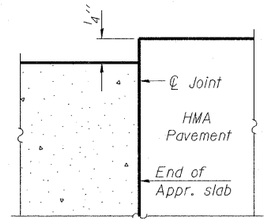

FLEXIBLE PAVEMENT

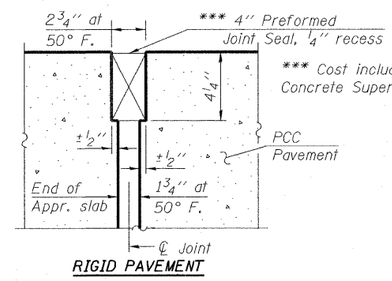

RIGID PAVEMENT

DETAIL A

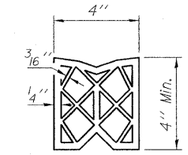

PREFORMED JOINT SEAL

LEGEND:

Concrete Removal

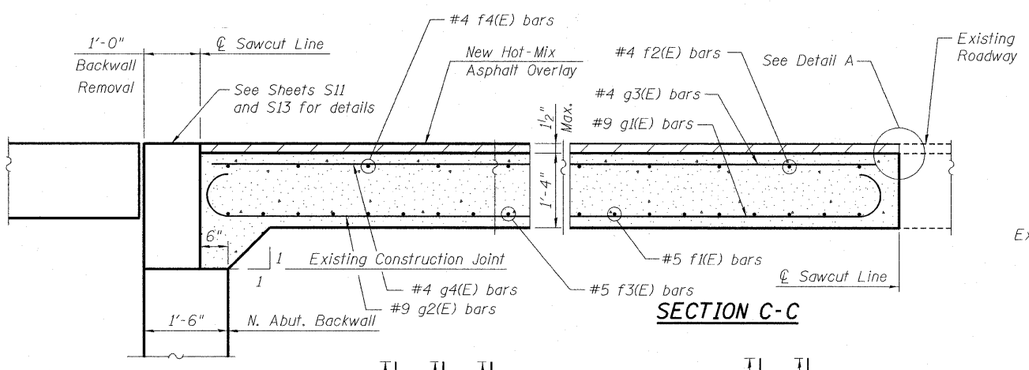

SECTION C-C

SECTION A-A

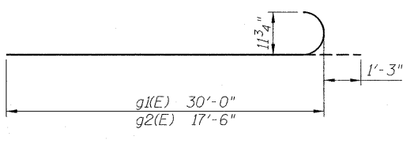

BARS g1(E) & g2(E)

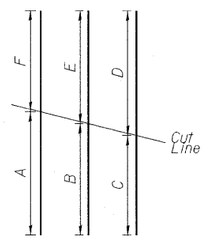

f3(E) CUT DIAGRAM

Segment	Length
A	4'-8"
B	3'-10"
C	3'-0"
D	2'-4"
E	1'-6"
F	8"

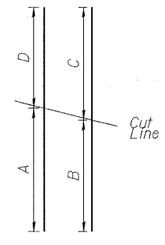

f4(E) CUT DIAGRAM

Segment	Length
A	4'-8"
B	3'-4"
C	2'-0"
D	8"

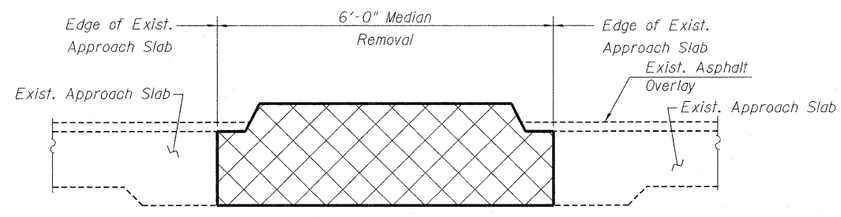

SECTION B-B REMOVAL

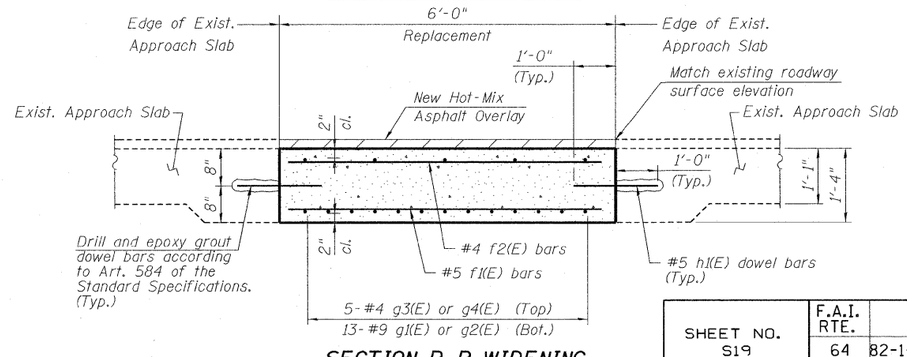

SECTION B-B WIDENING

BILL OF MATERIAL

Bar	No.	Size	Length	Shape
f1(E)	56	#5	5'-8"	
f2(E)	30	#4	5'-8"	
f3(E)	3	#5	5'-4"	
f4(E)	2	#4	5'-4"	
g1(E)	13	#9	31'-3"	
g2(E)	13	#9	18'-9"	
g3(E)	5	#4	30'-0"	
g4(E)	5	#4	12'-9"	
h1(E)	40	#5	2'-0"	

Item	Unit	Quantity
Reinforcement Bars, Epoxy Coated	Pound	2,910
Concrete Removal	Cu. Yd.	17
Concrete Superstructure	Cu. Yd.	12
Hot-Mix Asphalt Surface Course, Mix "D", N70	Ton	2

APPROACH SLAB WIDENING

STRUCTURE NO. 082-0099

DESIGNED	- DEV
CHECKED	- EJO
DRAWN	- GF
CHECKED	- EJO

SHEET NO.	F.A.I. RTE.	SECTION	COUNTY	TOTAL SHEETS	SHEET NO.
S19	64	82-1-3HB, 82-2N, 82-1-12RS	ST. CLAIR	352	257
S20 SHEETS	F.A.U. 9166 / F.A.U. 9180		CONTRACT NO. 76C51		
	FED. ROAD DIST. NO.	ILLINOIS	FED. AID PROJECT		

03/31/2011 082-0099_76C51_19_ApprSlabMedian.dgn