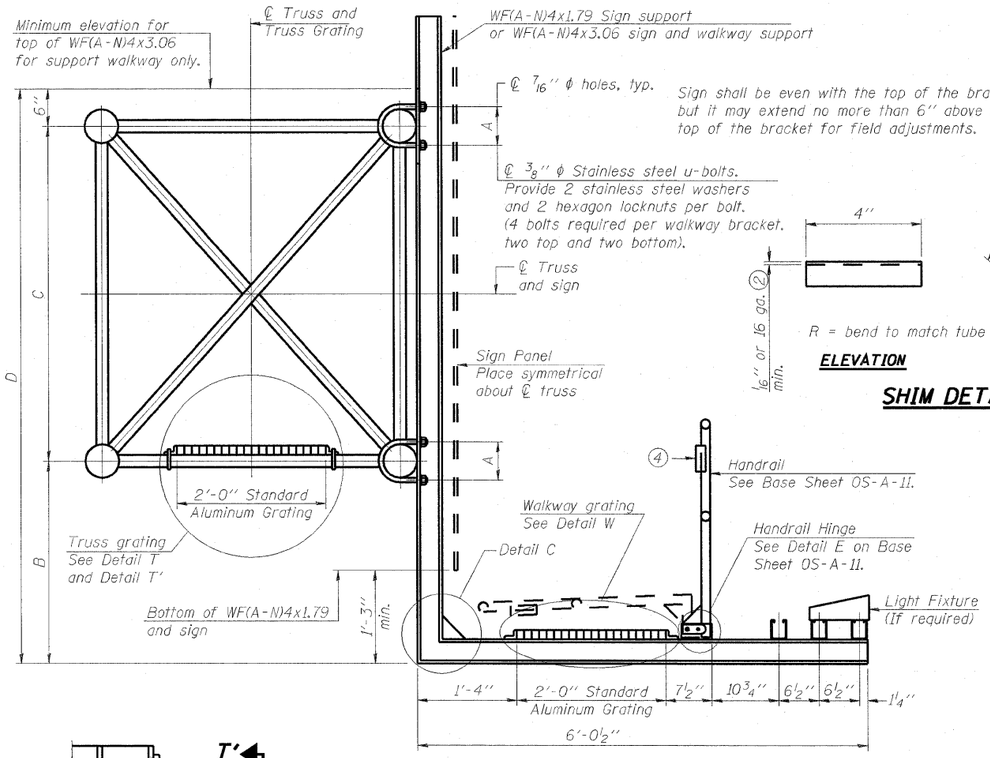

SECTION B-B

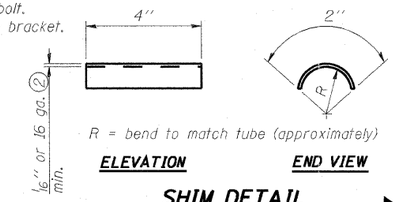

SHIM DETAIL

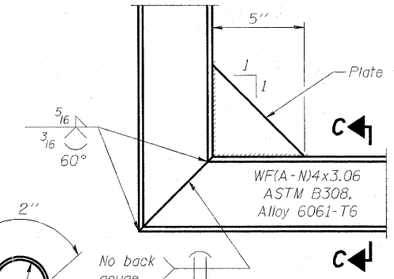

DETAIL C

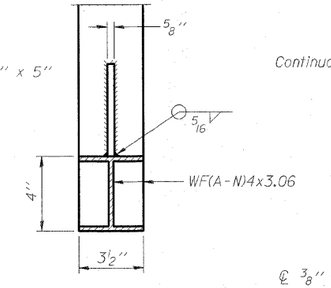

SECTION C-C

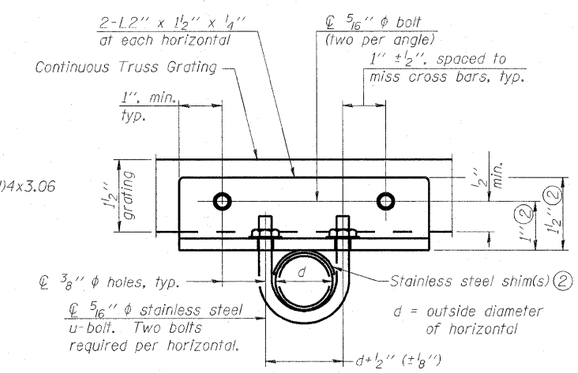

SECTION T-T

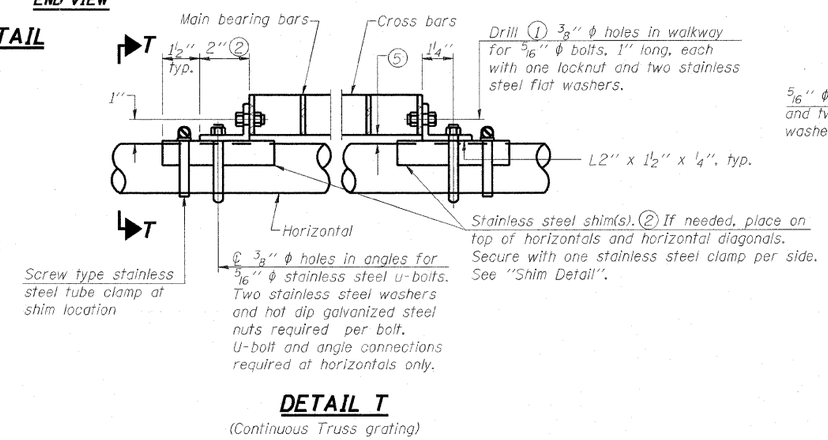

DETAIL T

(Continuous Truss grating)

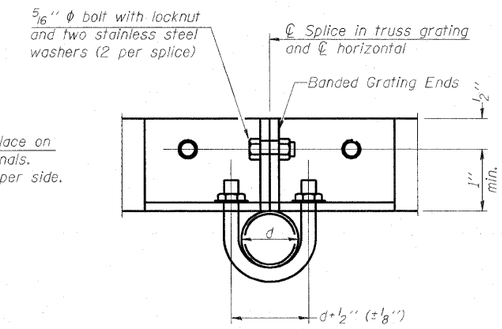

SECTION T'-T'

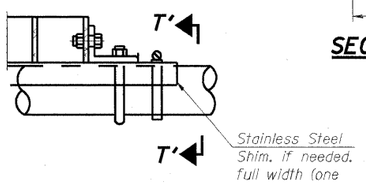

DETAIL T'

(Truss grating splice)
Details not shown same as Detail T.
Alternate materials may be used subject to the Engineer's review and approval.

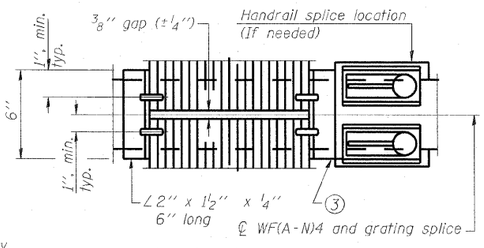

(AT WALKWAY GRATING SPLICE)

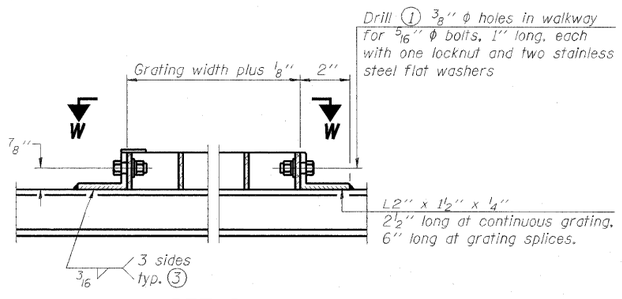

DETAIL W

(Walkway grating)

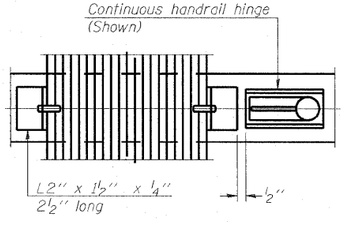

(CONTINUOUS WALKWAY GRATING)

SECTION W-W

SPECIFICATIONS FOR STANDARD ALUMINUM GRATING

Main Bearing Bars shall be 3/16" x 1½" on 1 3/16" centers and conform to ASTM B221 Alloy 6061-T6.

Cross bars shall be 3/16" x 1½" on 4" centers and conform to ASTM B221 Alloy 6063-T5 or 6061-T6.

OR

Aluminum Grating with modified "t" sections for main bearing bars shall meet the following requirements:

Main bars shall conform to ASTM B221 Alloy 6061-T6 and have a minimum section modulus equal to 0.0705 in.^{3} per bar, a depth of 1½", spaced on 1 3/16" centers.

Cross bars shall conform to ASTM B221 Alloy 6063-T5 or T-42 and spaced on 4" centers.

Structure Number	Station	A	6 B	C	6 D
8S082I070R002.5	57+13.00	6"	6'-9"	4'-6"	11'-9"
8S082I070L002.3	195+00.00	6"	6'-5"	4'-6"	11'-6"

1. Drilling holes in grating may be done in shop or field, based on Contractor's preference and subject to accurate alignment.
2. Stainless steel shims shall be placed as shown in Detail T if needed to compensate for alignment variations between horizontal and diagonal pipes beyond adjustment provided by angles. Thicker shims may be used subject to shims performing properly.
3. If Handrail Joint present, weld angle to WF(A-N)4 and ¼" extension bars. (See Base Sheet OS-A-11.)
4. PL ⅛" x ½" x 2" welded to handrail posts to protect locations that contact grating.
5. Tube to grating gap may vary from 0 to ½", max. to align walkway, allow for camber, etc.
6. Based on actual height of tallest sign given on OS-A-1.

OS-A-10 7-1-10

FILE NAME = $FILEL$	USER NAME = pkissel	DESIGNED PMK	REVISED -	STATE OF ILLINOIS DEPARTMENT OF TRANSPORTATION
		DRAWN PMK	REVISED -	
	PLOT SCALE = 3.3673 ' / IN.	CHECKED MPW	REVISED -	
	PLOT DATE = 6/13/2011	DATE 07-01-2011	REVISED -	

OVERHEAD SIGN STRUCTURES
ALUMINUM WALKWAY DETAILS

SCALE: N/A | SHEET NO. 9 OF 13 SHEETS | STA. N/A | TO STA. N/A

F.A.I. RTE.	SECTION	COUNTY	TOTAL SHEETS	SHEET NO.
64/998	82-1-B-2	ST. CLAIR	399	110
		CONTRACT NO. 76C76		

FED. ROAD DIST. NO. | ILLINOIS | FED. AID PROJECT