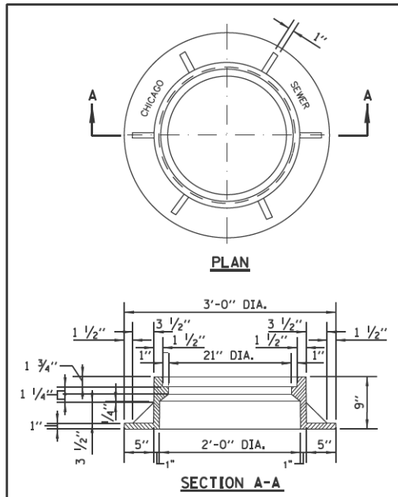

NOTE: METAL PLATES MUST BE FURNISHED FOR PERFORATED LIDS ON MANHOLES.

HEAVYWEIGHT MANHOLE FRAME

MATERIAL: CAST IRON

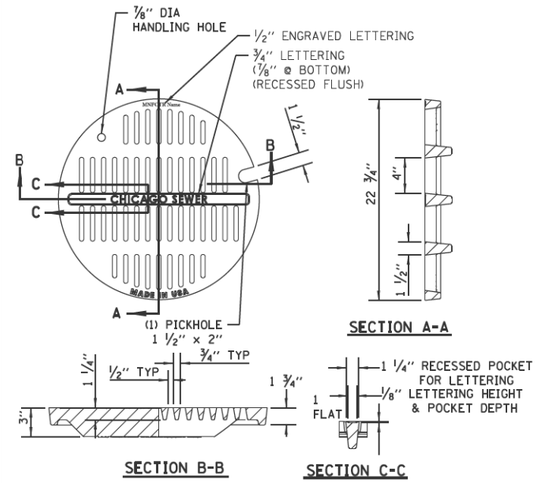

MATERIALS
GRATE-GRAY IRON
ASTM A48 CL35B

DESIGN LOAD
HEAVY DUTY

COATING
UNDIPPED

OPEN AREA
85.6 SQ. IN.

STANDARD CB/MH LID

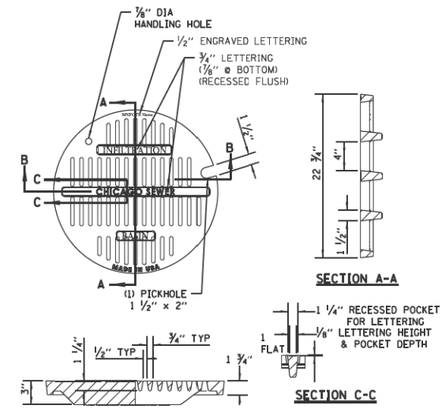

MATERIALS
GRATE-GRAY IRON
ASTM A48 CL35B

DESIGN LOAD
HEAVY DUTY

COATING
UNDIPPED

OPEN AREA
85.6 SQ. IN.

STANDARD LID FOR INFILTRATION SYSTEMS

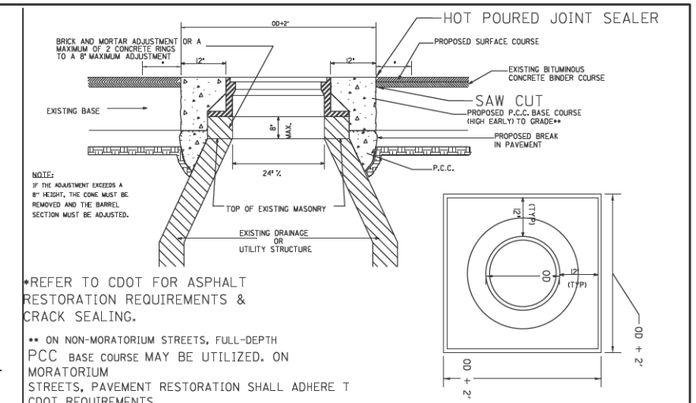

*REFER TO CDOT FOR ASPHALT RESTORATION REQUIREMENTS & CRACK SEALING.

** ON NON-MORATORIUM STREETS, FULL-DEPTH PCC BASE COURSE MAY BE UTILIZED. ON MORATORIUM STREETS, PAVEMENT RESTORATION SHALL ADHERE T CDOT REQUIREMENTS.

NOTES:

IF THE ADJUSTMENT EXCEEDS AN 8" HEIGHT, THE CONE MUST BE REMOVED AND THE BARREL SECTION MUST BE ADJUSTED.

THE CONTRACTOR IS REQUIRED TO REPLACE ANY BROKEN FRAMES AND LIDS OF SEWER STRUCTURES WITH STANDARD FRAMES AND LIDS OF THE DWM. IN ADJUSTMENT OR RECONSTRUCTION OF SEWER STRUCTURES, ANY NON-STANDARD FRAMES AND LIDS MUST BE REPLACED WITH STANDARD FRAMES AND LIDS. IN ADJUSTMENT OR RECONSTRUCTION OF INLETS, ANY NON-STANDARD INLETS (GUTTER BOXES) MUST BE REPLACED WITH DWM STANDARD INLETS.

THE FRAMES AND LIDS OF SEWER STRUCTURES TO BE ABANDONED, REMOVED, OR FILLED MUST BE SALVAGED AND THE DWM NOTIFIED FOR PICK UP.

MANHOLES, CATCH BASINS AND INLETS MUST BE PROTECTED FROM THE ENTRY OF ASPHALT/DEBRIS INTO THE SEWER SYSTEM DURING CONSTRUCTION. THE CONTRACTOR MUST MARK LOCATIONS OF ALL SEWER STRUCTURES ON THE SIDEWALK BEFORE STARTING PAVEMENT REMOVAL/REPLACEMENT. ADJUSTMENT OF FRAMES AND LIDS OF SEWER STRUCTURES MUST BE COMPLETED PRIOR TO STREET RESURFACING.

DETAIL OF FRAME ADJUSTMENT

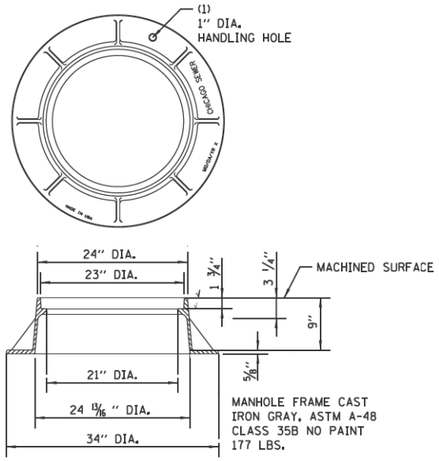

LIGHTWEIGHT MANHOLE FRAME

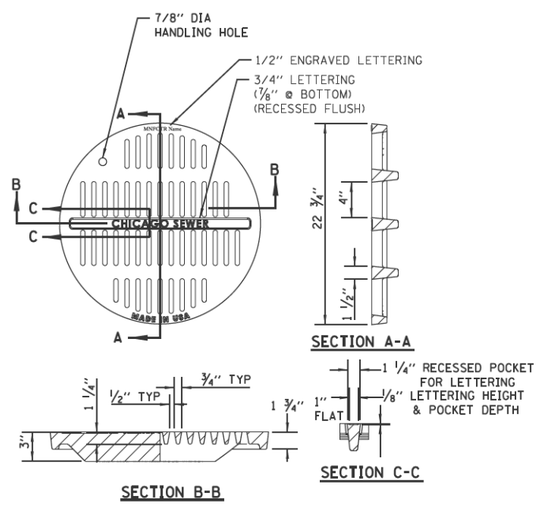

MATERIALS
GRATE-GRAY IRON
ASTM A48 CL35B

DESIGN LOAD
HEAVY DUTY

COATING
UNDIPPED

OPEN AREA
85.6 SQ. IN.

ADA MANHOLE LID

NOTE:
NOT TO BE USED WITHOUT PRIOR APPROVAL OF CDWM

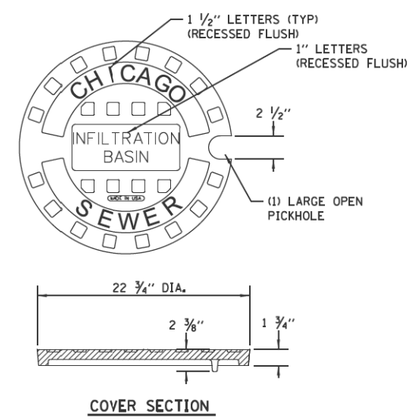

INFILTRATION SOLID LID FOR CATCH BASIN

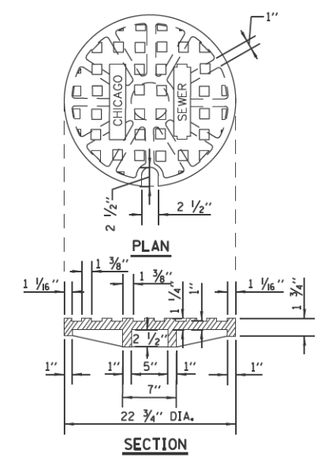

SOLID LID FOR MANHOLES

STANDARD REVISIONS	
DATE	DESCRIPTION
1/22/14	Approved

PERCENT COMPLETE	DATE
30	
60	
75	
90	
100	
BULLETIN	

CITY OF CHICAGO
DEPARTMENT OF WATER MANAGEMENT
BUREAU OF ENGINEERING SERVICES

MANHOLE LIDS AND FRAMES

DRAWN: SBB
DESIGNED:
CHECKED:
CO. CC. SO
REVIEWED:

A.3

___ OF ___

PN _____

$FILE$
$DATE$

FILE PATH = pw:\\388039-pwint.aecomonline.local:PWAECOM001\Documents\01 Americas\Transportation\60269938 Cicero\Phase.II\002.CAD\006.Roadway\Sheets\60X62-Sht-CDOT-03.dgn

TranSystems

D160X62-Sht-CDOT-03.dgn	DESIGNED - CDWM	REVISED -	
USER NAME = BAWtort	DRAWN - CDWM	REVISED -	
PLOT SCALE = 2.0000 ' / in.	CHECKED - CDWM	REVISED -	
PLOT DATE = 8/19/2014	DATE - 8/20/2014	REVISED -	

STATE OF ILLINOIS
DEPARTMENT OF TRANSPORTATION

CITY OF CHICAGO DEPARTMENT OF WATER MANAGEMENT
MANHOLE LIDS AND FRAMES

SCALE: NONE | SHEET 1 OF 2 SHEETS | STA. TO STA.

F.A.I RTE.	SECTION	COUNTY	TOTAL SHEETS	SHEET NO.
90/94/290	2013-074I	COOK	58	57

CONTRACT NO. 60X62

ILLINOIS FED. AID PROJECT