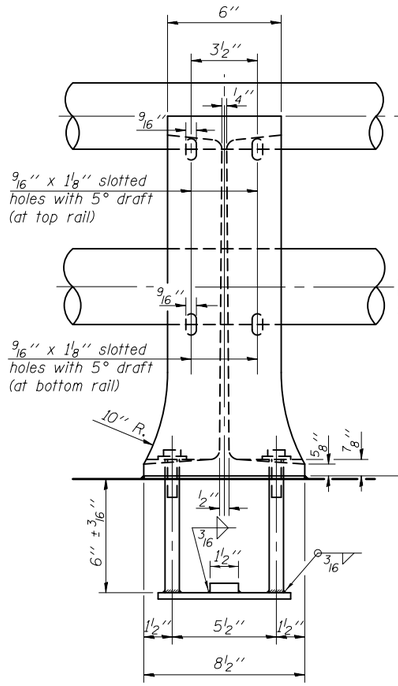

VIEW B-B

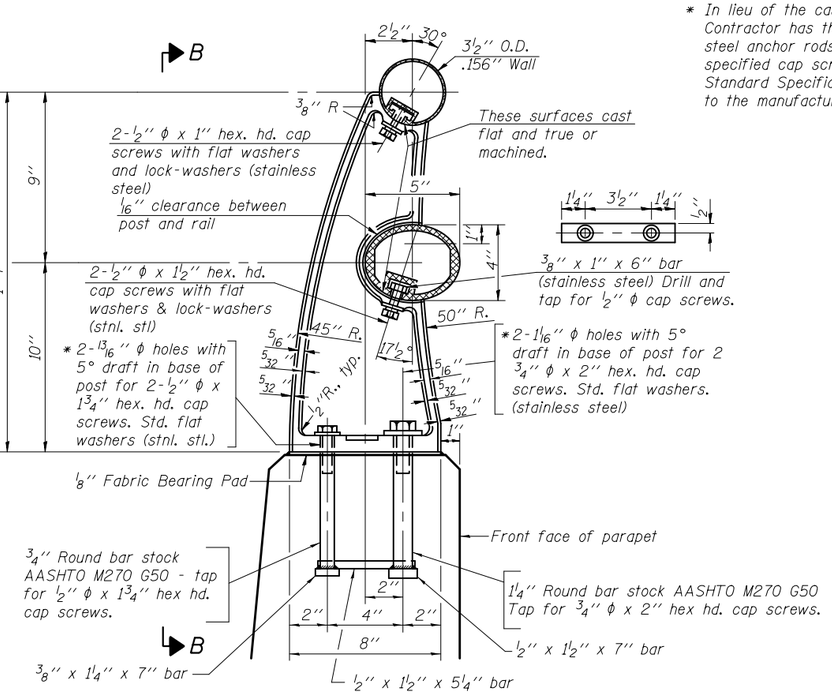

SECTION A-A

RAIL POST DETAILS

* In lieu of the cast-in-place anchor device shown, the Contractor has the option of drilling and setting stainless steel anchor rods of the same diameter and grade as the specified cap screws according to Article 509.06 of the Standard Specifications. Embedment shall be according to the manufacturer's specifications.

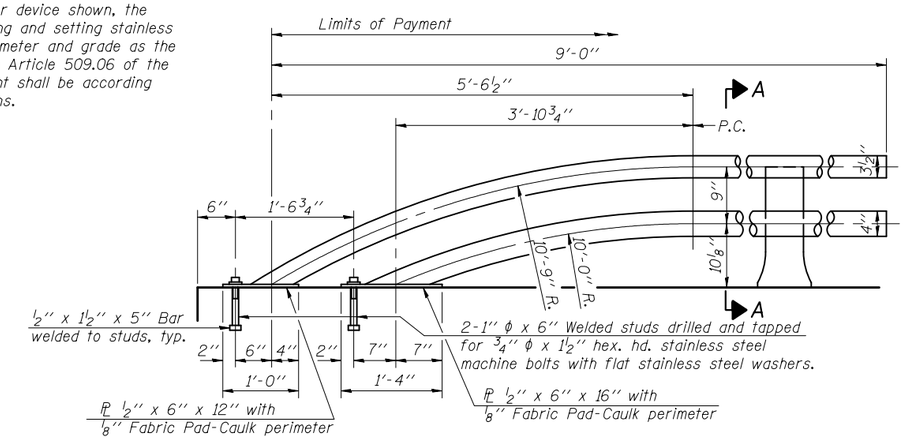

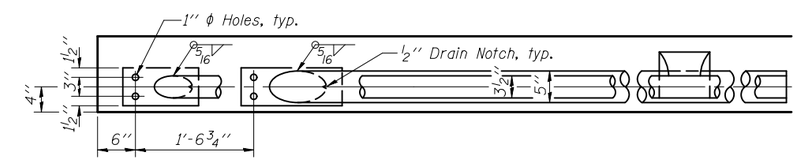

RAIL TERMINAL SECTION

Note:
The end rail post shall be set back as required for the terminal rail section.

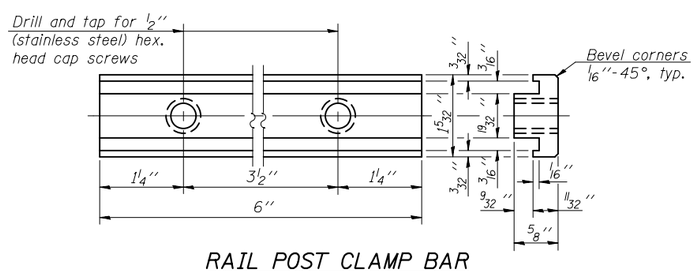

RAIL POST CLAMP BAR
For Top Rail

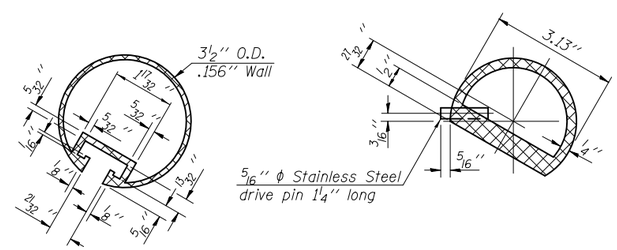

SECTION THRU TOP RAIL

SECTION THRU SPLICE
For Top Rail

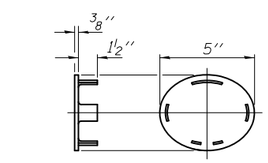

CAST END CAP
For bottom rail
DRIVE FIT TYPE

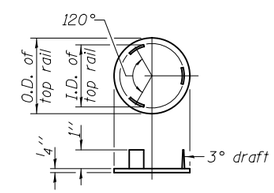

CAST END CAP
For top rail

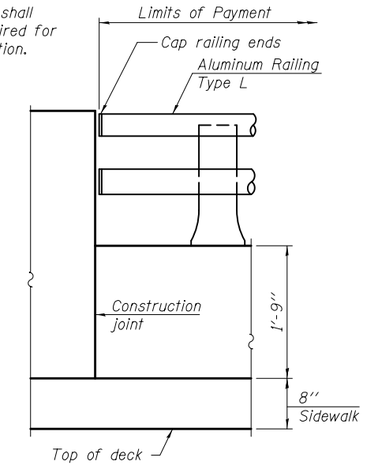

RAIL END TREATMENT FOR TYPE 5 AND 6 TERMINAL

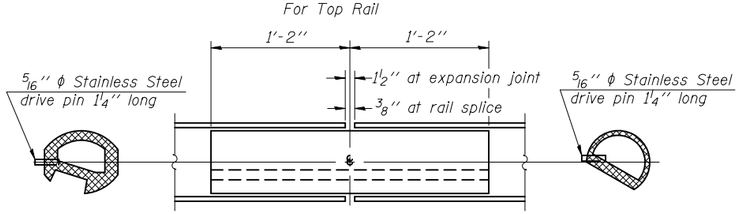

BOTTOM RAIL

TOP RAIL

RAIL SPLICE

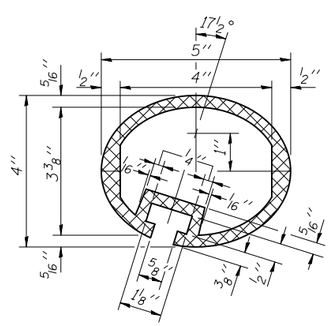

SEC. THRU ELLIPTICAL RAIL SECTION

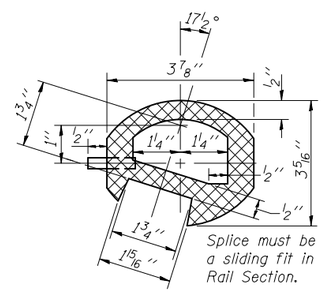

SEC. THRU SPLICE

Notes:
All Posts shall be normal to parapet.
All joints in rail shall be spliced per detail.
All exposed rail ends shall be capped per detail.
Provide 1-⅛'' and 2-1/16'' Aluminum Shims for 25% of the Posts. Rail elements shall be parallel to Grade-high spots will be ground and low spots shimmed.
See sheet 10 of 24 for rail post spacing.

BILL OF MATERIAL

Item	Unit	Quantity
Aluminum Railing, Type L	Foot	236

R-20 1-27-12 (7'-0'' to 10'-0'' Post spacing)

DESIGNED - Dewey H. Coultas	EXAMINED	DATE - OCTOBER 9, 2014	STATE OF ILLINOIS DEPARTMENT OF TRANSPORTATION
CHECKED - Frank W. Sharpe	ACTING ENGINEER OF BRIDGE DESIGN		
DRAWN - h.t. duong	PASSED	REVISED	
CHECKED - DHC/FWS	ACTING ENGINEER OF BRIDGES AND STRUCTURES	REVISED	

ALUMINUM RAILING, TYPE L
STRUCTURE NO. 032-0124
SHEET NO. 15 OF 24 SHEETS

F.A.U. RTE.	SECTION	COUNTY	TOTAL SHEETS	SHEET NO.
5966	(32-2) HBR-6	GRUNDY	98	62
		CONTRACT NO. 66B27		
	ILLINOIS FED. AID PROJECT			