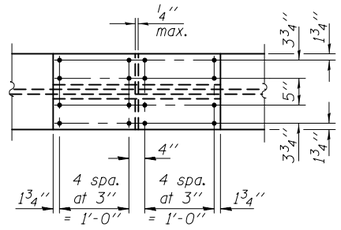

PLAN - TOP FLANGES

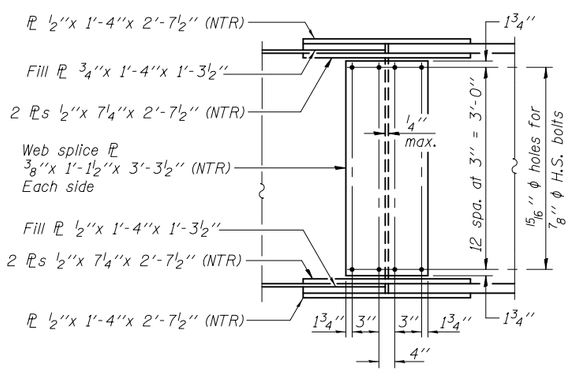

ELEVATION

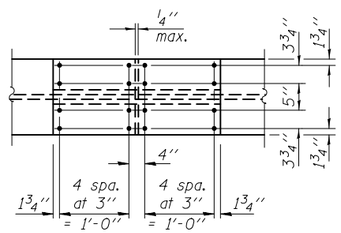

PLAN - BOTT. FLANGES

SPLICES 1 & 2

INTERIOR GIRDER MOMENT TABLE			
		0.4 Sp. 1 or 0.6 Sp. 2	Pier
I_s	(in^4)	18369	29753
$I_c(n)$	(in^4)	44573	———
$I_c(3n)$	(in^4)	32484	———
$I_c(cr)$	(in^4)	———	34773
S_s	(in^3)	849	1240
$S_c(n)$	(in^3)	1148	———
$S_c(3n)$	(in^3)	1049	———
$S_c(cr)$	(in^3)	———	1314
DC1	(k/')	0.850	0.918
M_{DC1}	('k)	572	1305
DC2	(k/')	0.261	0.261
M_{DC2}	('k)	181	380
DW	(k/')	0.317	0.317
M_{DW}	('k)	220	461
M_{LL+IM}	('k)	1319	1572
M_u (Strength I)	('k)	3580	5549
$\phi_f M_n$	('k)	5725	5945
f_s DC1	(ksi)	8.1	12.6
f_s DC2	(ksi)	2.1	3.5
f_s DW	(ksi)	2.5	4.2
f_s (LL+IM)	(ksi)	13.8	14.4
f_s (Service II)	(ksi)	30.6	39.0
$0.95R_hF_{yf}$	(ksi)	47.5	47.5
V_f	(k)	22.9	———

INTERIOR GIRDER REACTION TABLE			
		N. Abut. or S. Abut.	Pier
R_{DC1}	(k)	65.6	116.0
R_{DC2}	(k)	9.8	34.3
R_{DW}	(k)	11.9	41.7
R_{LL+IM}	(k)	87.4	164.4
R_{Total}	(k)	174.7	356.4

I_s, S_s: Non-composite moment of inertia and section modulus of the steel section used for computing f_s (Total-Strength I, and Service II) due to non-composite dead loads ($in.^4$ and $in.^3$).

$I_c(n)$, $S_c(n)$: Composite moment of inertia and section modulus of the steel and deck based upon the modular ratio, "n", used for computing f_s (Total-Strength I, and Service II) in uncracked sections, due to short-term composite live loads ($in.^4$ and $in.^3$).

$I_c(3n)$, $S_c(3n)$: Composite moment of inertia and section modulus of the steel and deck based upon 3 times the modular ratio, "3n", used for computing f_s (Total-Strength I, and Service II) in uncracked sections, due to long-term composite (superimposed) dead loads ($in.^4$ and $in.^3$).

$I_c(cr)$, $S_c(cr)$: Composite moment of inertia and section modulus of the steel and longitudinal deck reinforcement, used for computing f_s (Total-Strength I and Service II) in cracked sections, due to both short-term composite live loads and long-term composite dead loads ($in.^4$ and $in.^3$).

DC1: Un-factored non-composite dead load (kips/ft.).

M_{DC1}: Un-factored moment due to non-composite dead load (kip-ft.).

DC2: Un-factored long-term composite (superimposed excluding future wearing surface) dead load (kips/ft.).

M_{DC2}: Un-factored moment due to long-term composite (superimposed excluding future wearing surface) dead load (kip-ft.).

DW: Un-factored long-term composite (superimposed future wearing surface only) dead load (kips/ft.).

M_{DW}: Un-factored moment due to long-term composite (superimposed future wearing surface only) dead load (kip-ft.).

M_{LL+IM}: Un-factored live load moment plus dynamic load allowance (impact) ((kip-ft.).

M_u (Strength I): Factored design moment (kip-ft.).
$1.25\ (M_{DC1} + M_{DC2}) + 1.5\ M_{DW} + 1.75\ M_{LL+IM}$

$\phi_f M_n$: Compact composite positive moment capacity computed according to Article 6.10.7.1 or non-slender neg. moment capacity according to Art. A6.1.1 or A6.1.2 (kip-ft.).

f_s DC1: Un-factored stress at edge of flange for controlling steel flange due to vertical non-composite dead loads as calculated below (ksi).
M_{DC1} / S_{nc}

f_s DC2: Un-factored stress at edge of flange for controlling steel flange due to vertical composite dead loads as calculated below (ksi).
M_{DC2} / $S_c(3n)$ or M_{DC2} / $S_c(cr)$ as applicable.

f_s DW: Un-factored stress at edge of flange for controlling steel flange due to vertical composite future wearing surface loads as calculated below (ksi).
M_{DW} / $S_c(3n)$ or M_{DW} / $S_c(cr)$ as applicable.

f_s (LL+IM): Un-factored stress at edge of flange for controlling steel flange due to vertical composite live plus impact loads as calculated below (ksi).
M_{LL+IM} / $S_c(n)$ or M_{LL+IM} / $S_c(cr)$ as applicable.

f_s (Service II): Sum of stresses as computed below (ksi).
$f_{sDC1} + f_{sDC2} + f_{sDW} + 1.3\ f_s(LL+IM)$

$0.95R_hF_{yf}$: Composite stress capacity for Service II loading according to Article 6.10.4.2 (ksi).

V_f: Maximum factored shear range in composite portion of span computed according to Article 6.10.10.

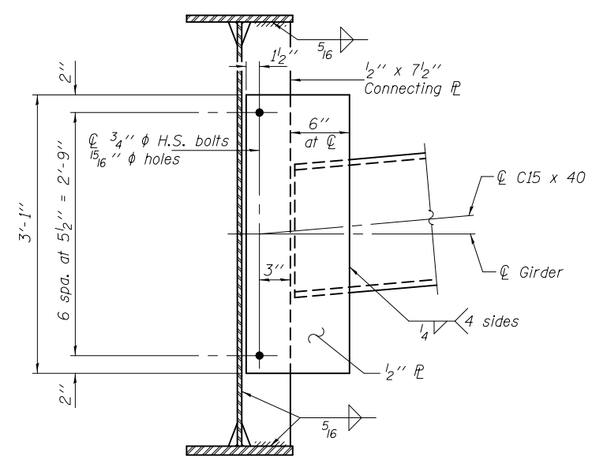

DIAPHRAGM D

(45 Required)

Notes: Two hardened washers shall be required for all oversized holes in diaphragms.

Alternate channels C15x50 are permitted to facilitate material acquisition. Calculated weight of structural steel is based on C15x40 sections. The alternate, if utilized, shall be provided at no cost to the department.

Load carrying components designated "NTR" shall conform to the Impact Testing Requirement, Zone 2.

All splice plates except fill plates shall be AASHTO M 270 Grade 50 steel unless otherwise noted.

*TOP OF WEB ELEVATIONS

Location	℄ Brg. N. Abut.	℄ Splice 1	℄ Brg. Pier	℄ Splice 2	℄ Brg. S. Abut.
Girder 1	568.92	569.65	569.66	569.67	568.98
Girder 2	569.03	569.76	569.76	569.76	569.06
Girder 3	569.15	569.86	569.86	569.86	569.13
Girder 4	569.23	569.94	569.93	569.92	569.19
Girder 5	569.15	569.84	569.83	569.82	569.07
Girder 6	569.08	569.75	569.73	569.71	568.95

*For fabrication use only.

DESIGNED - Dewey H. Coultas	EXAMINED	DATE - OCTOBER 9, 2014	STATE OF ILLINOIS DEPARTMENT OF TRANSPORTATION
CHECKED - Frank W. Sharpe	ACTING ENGINEER OF BRIDGE DESIGN		
DRAWN - h.t. duong	PASSED	REVISED	
CHECKED - DHC/FWS	ACTING ENGINEER OF BRIDGES AND STRUCTURES	REVISED	

STRUCTURAL STEEL DETAILS
STRUCTURE NO. 032-0124
SHEET NO. 17 OF 24 SHEETS

F.A.U. RTE.	SECTION	COUNTY	TOTAL SHEETS	SHEET NO.
5966	(32-2) HBR-6	GRUNDY	98	64

CONTRACT NO. 66B27

ILLINOIS FED. AID PROJECT