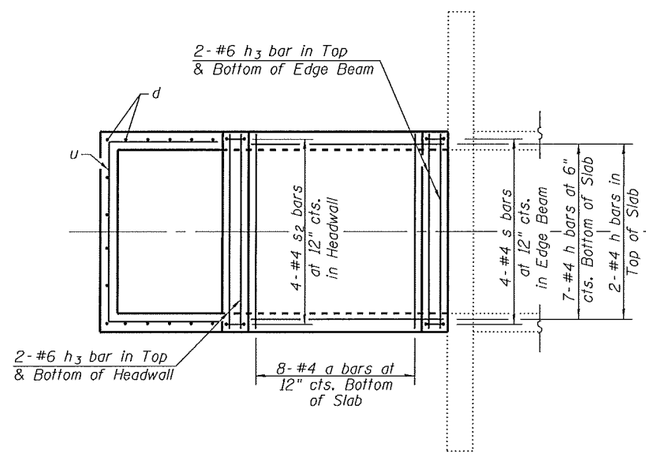

LEFT EXTENSION

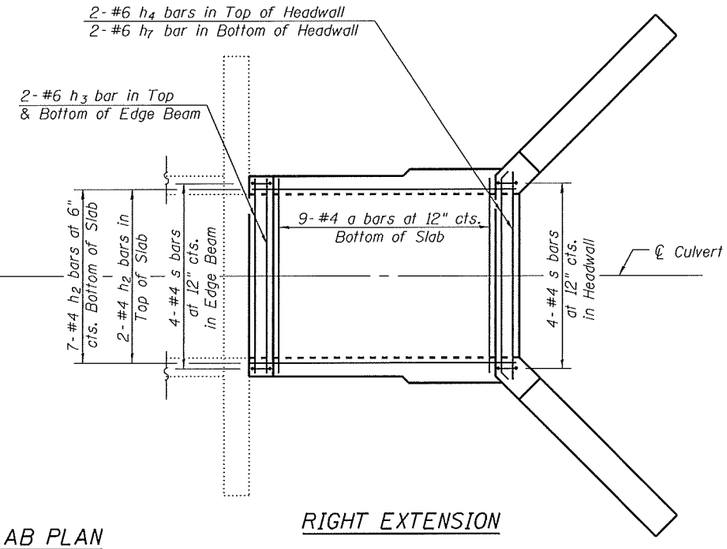

TOP SLAB PLAN
SHOWING REINFORCEMENT
(v, v_1, h_5 & h_6 bars not shown for clarity)

RIGHT EXTENSION

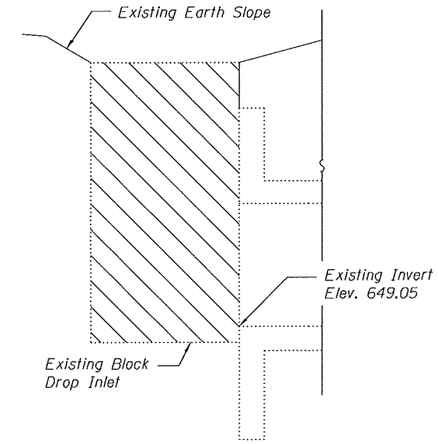

EXISTING INLET ELEVATION
(North End of Existing Culvert)

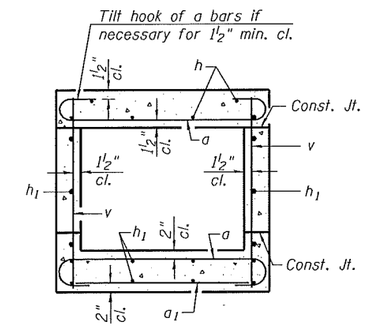

SECTION A-A

Indicates Limits of Existing Block Drop Inlet Removal to be paid for as Removal of Existing Structures, see Roadway Plans.

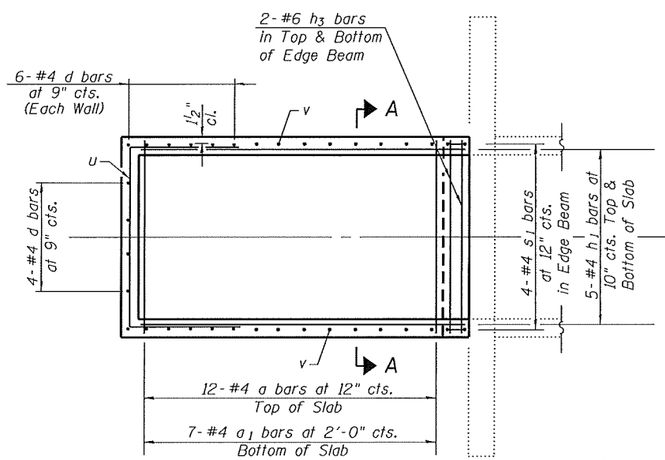

LEFT EXTENSION

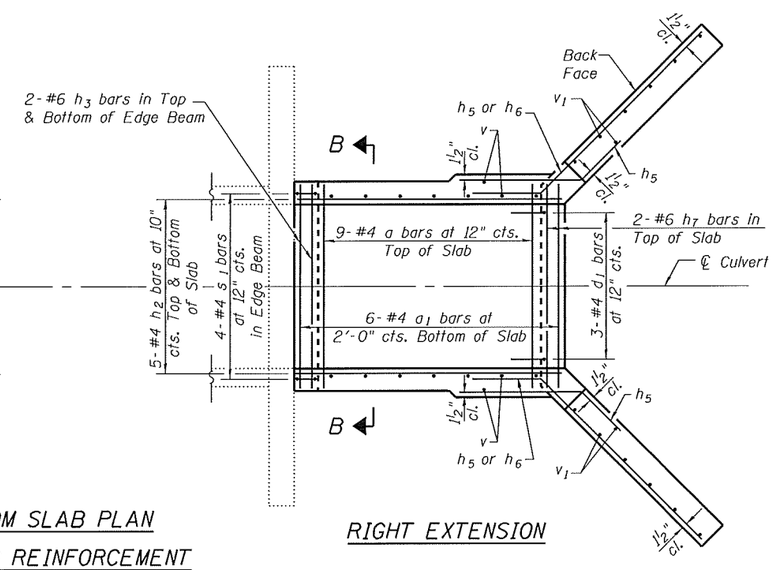

BOTTOM SLAB PLAN
SHOWING REINFORCEMENT

RIGHT EXTENSION

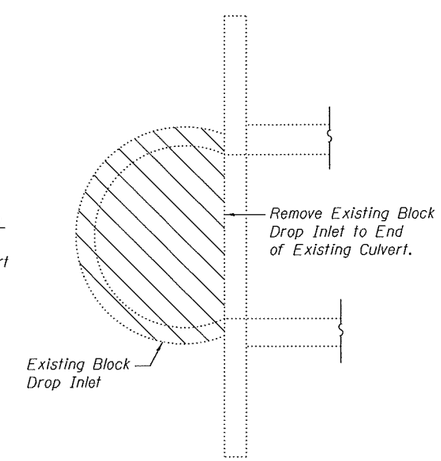

EXISTING INLET PLAN
(North End of Existing Culvert)

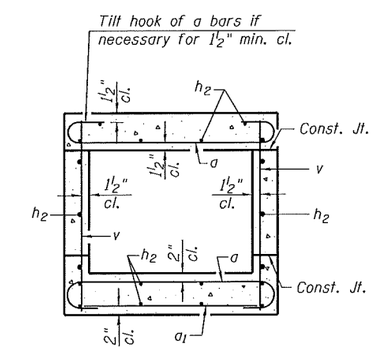

SECTION B-B

Note:
For Elevation, Bar Bends, and Total Bill of Material see sheet 3 of 3.

FILE NAME = 290-69.78-76789-002.dgn

LOCHMUELLER GROUP
1323 S.W. BRADLEY P. SMITH DRIVE
TROY, ILLINOIS 62294
PHONE (618) 667-1403

USER NAME = jdinkelmann	DESIGNED - JD	REVISED -	
Illinois Design Firm Number 184.001670	CHECKED - BB	REVISED -	
PLOT SCALE =	DRAWN - WS	REVISED -	
PLOT DATE = 8/8/2014	CHECKED - CJF	REVISED -	

STATE OF ILLINOIS
DEPARTMENT OF TRANSPORTATION

BOX CULVERT EXTENSION DETAILS
STATION 290+69.78
SHEET NO. 2 OF 3 SHEETS

F.A.S. RTE.	SECTION	COUNTY	TOTAL SHEETS	SHEET NO.
752	101-2RS-1	JERSEY	438	228
		CONTRACT NO. 76789		
	ILLINOIS	FED. AID PROJECT		