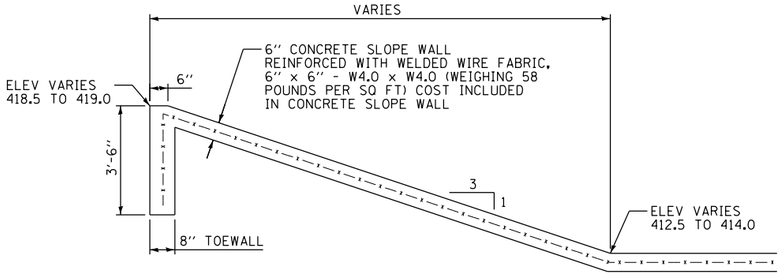

CONCRETE SLOPE WALL DETAIL – TYPICAL SECTION
NOT TO SCALE

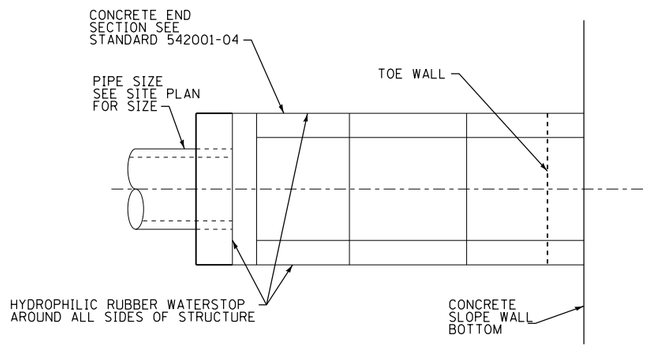

PLAN – END SECTION AT BOTTOM OF SLOPE WALL
NOT TO SCALE

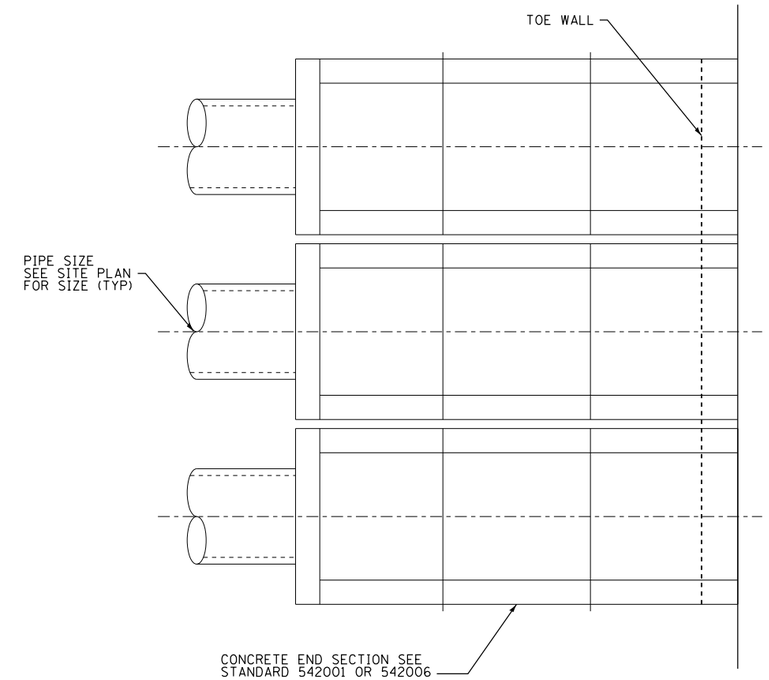

PLAN – END SECTION AT TOP OF SLOPE WALL
NOT TO SCALE

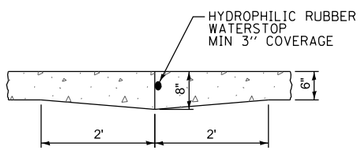

TYPICAL SLOPE WALL CONSTRUCTION JOINT DETAIL
NOT TO SCALE

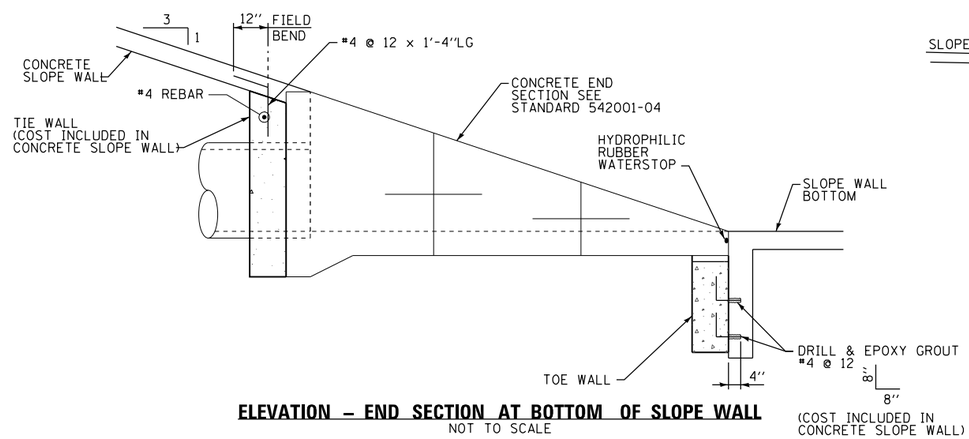

ELEVATION – END SECTION AT BOTTOM OF SLOPE WALL
NOT TO SCALE

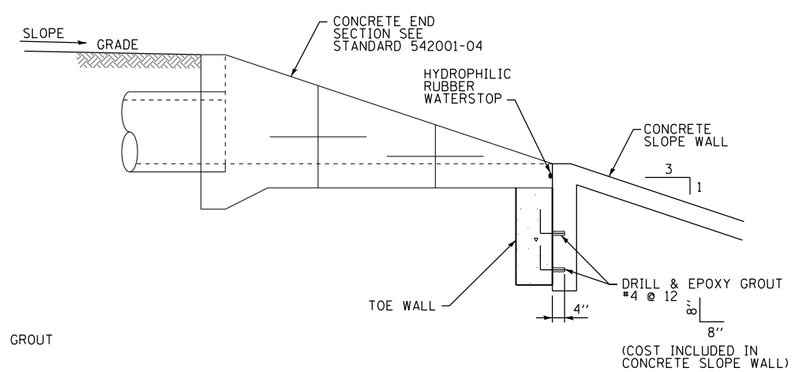

ELEVATION – END SECTION AT TOP OF SLOPE WALL
NOT TO SCALE

FILE NAME = Q:\Files\110023\Work Order 3 MO Ave Ph2\CADD Sheets\D876G99-sht-misc.dgn

KLINGNER & ASSOCIATES, P.C. Engineers · Architects · Surveyors	USER NAME = seb	DESIGNED - SEB	REVISED -	STATE OF ILLINOIS DEPARTMENT OF TRANSPORTATION	MISCELLANEOUS DETAILS – CONCRETE SLOPE WALL MISSOURI AVENUE DEEP WELL FACILITY	F.A.I. RTE.	SECTION	COUNTY	TOTAL SHEETS / SHEET NO.
		DRAWN - BGJ	REVISED -			64	82-4T-1	ST. CLAIR	185 / 56
	PLOT SCALE = 0.1667 ' / in.	CHECKED -	REVISED -					CONTRACT NO. 76G99	
	PLOT DATE = 8/23/2014	DATE -	REVISED -		SCALE: NONE / SHEET 1 OF 1 SHEETS / STA. TO STA.		ILLINOIS FED. AID PROJECT		