CONTRACT NO. 72997

F.A.P. RTE.	SECTION	COUNTY	TOTAL SHEETS	SHEET NO.
315	116(BR-1)	LOGAN	79	38
STA. 81+00		TO STA. 90+00		
FED. ROAD DIST. NO.	ILLINOIS	FED. AID PROJECT		

SHEET NO. 11
OF 15 SHEETS

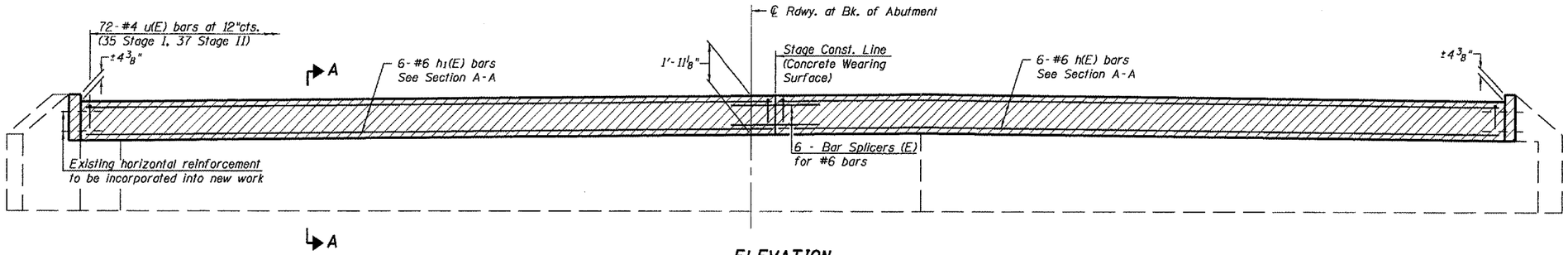

ELEVATION
(Looking West)

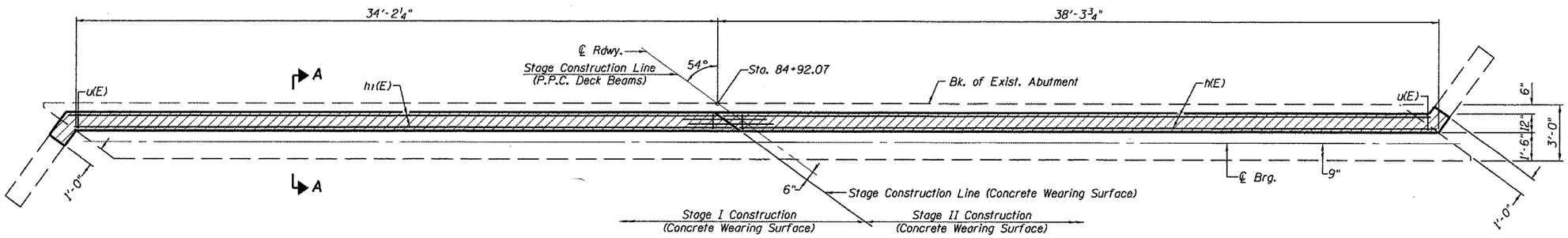

PLAN

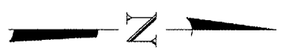

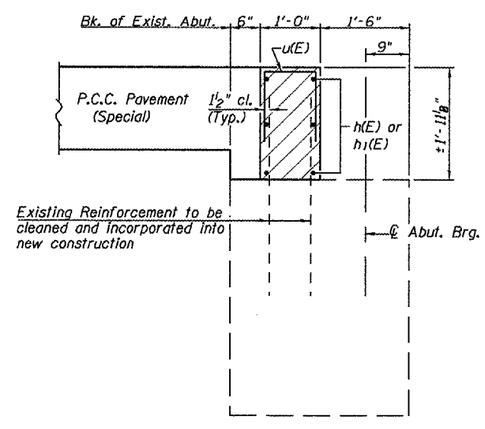

SECTION A-A
(Dimensions are at Rt. angles to abutment)

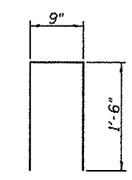

BAR u(E)

Notes: Hatched areas to be poured after Concrete Wearing Surface is in place.

WEST ABUTMENT
BILL OF MATERIAL

BAR	NO.	SIZE	LENGTH	SHAPE
h(E)	6	#6	36'-11"	——
h1(E)	6	#6	34'-4"	——
u(E)	72	#4	3'-9"	⊓
Reinforcement Bars, Epoxy Coated			Pound	825
Bar Splicers			Each	6
Concrete Substructure			Cu. Yd.	5.50

WEST ABUTMENT
F.A.P. ROUTE 315 - (U.S. 136)
OVER PRAIRIE CREEK DITCH
SECTION 116(BR-1)
LOGAN COUNTY
STA. 85+45.00
S.N. 054-0024

PLOT DATE = 7/9/2007
FILE NAME = a:\Projects\d552905\allen_henderson_final\sht 028-042.dgn
MODEL NAME = 092107-72997-000-000-011

ALLEN HENDERSON & ASSOCIATES, INC. CONSULTING CIVIL AND STRUCTURAL ENGINEERS SPRINGFIELD, IL. PHONE: (217) 544-8033 IL DESIGN FIRM NO. 184-001907