CONTRACT NO. 72997

F.A.P. RTE.	SECTION	COUNTY	TOTAL SHEETS	SHEET NO.
315	116(BR-2)	LOGAN	79	48
STA. 309+00		TO STA. 318+90		
FED. ROAD DIST. NO.	ILLINOIS	FED. AID PROJECT		

SHEET NO. 6 OF 16 SHEETS

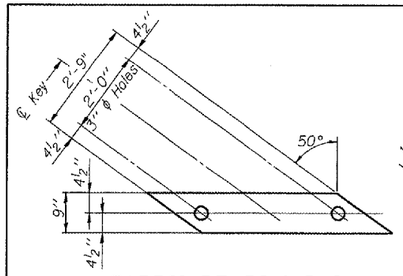

FABRIC BEARING PAD
(Interior)

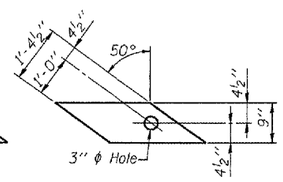

FABRIC BEARING PAD
(Exterior)

FIXED

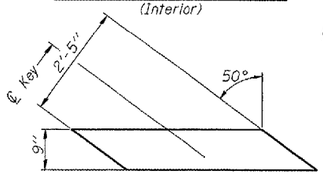

FABRIC BEARING PAD
(Interior)

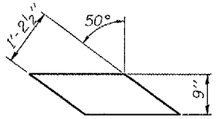

FABRIC BEARING PAD
(Exterior)

EXPANSION

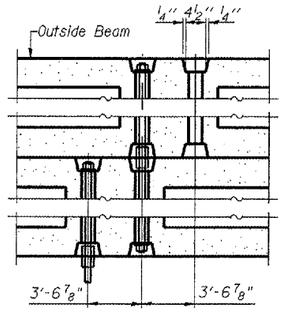

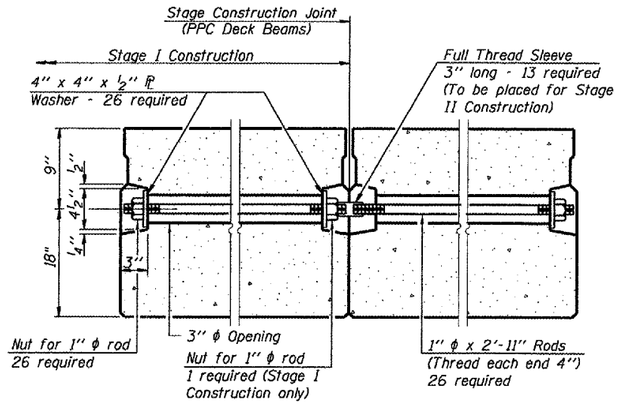

TYPICAL TRANSVERSE TIE ASSEMBLY

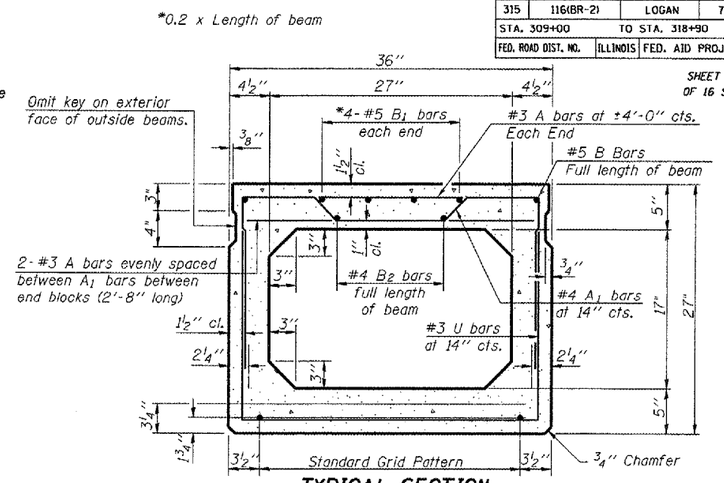

TYPICAL SECTION

16-½" ϕ Strands, Each Strand Stressed to 30,900 Lbs.
6-Strands 1¾" up, 8-Strands 3¼" up, 2-Strands 7½" up

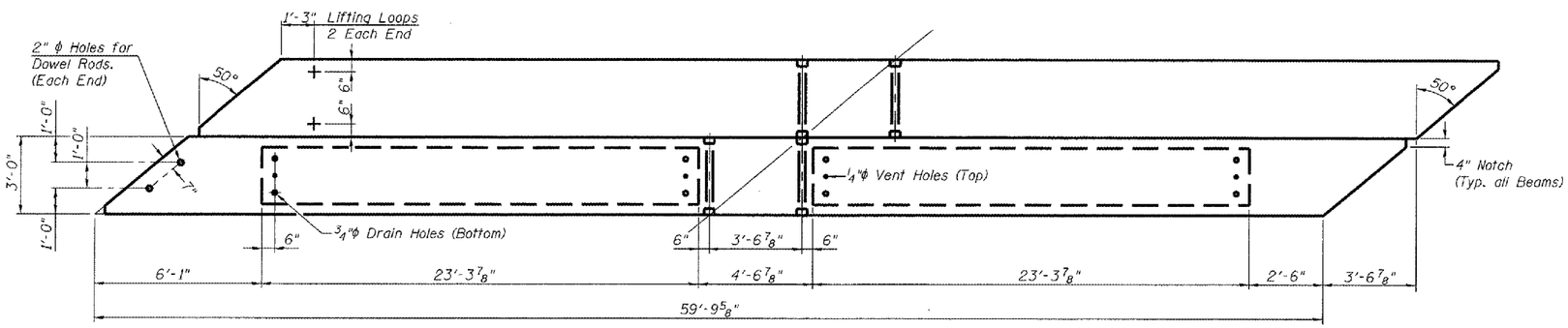

PLAN

Note:
Place strands symmetrically about ℄ of beam.

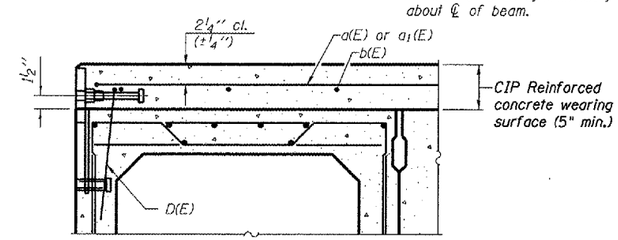

FASCIA BEAM

Notes:
The rail anchorage shall be cast with the beam and the wearing surface shall be cast in the field. Formwork necessary for the wearing surface may be secured utilizing the bottom rail anchorage inserts and or additional inserts cast into the beam. Drilling into the beam will not be permitted.

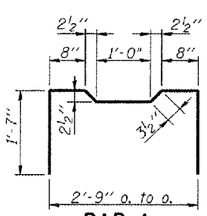

BAR A1

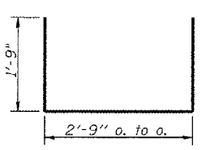

BARS U & U1

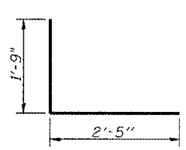

BAR D1

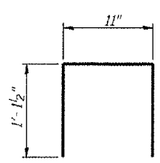

BAR D(E)

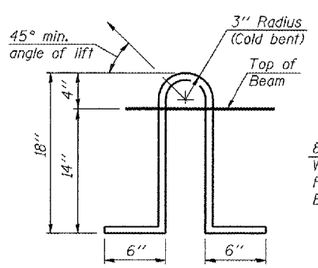

LIFTING LOOP DETAIL

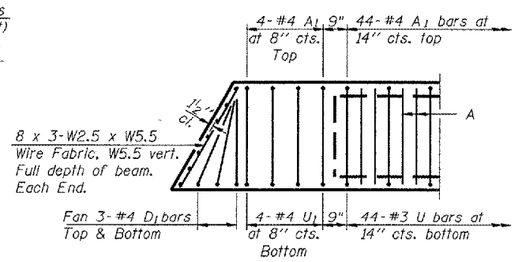

END PLAN

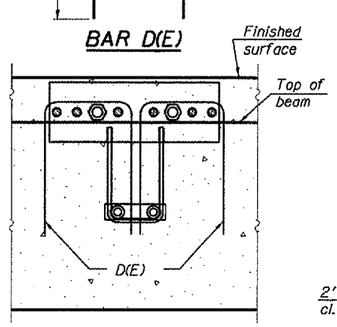

SECTION A-A

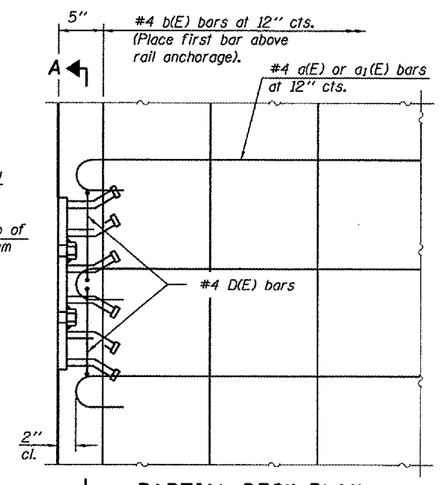

PARTIAL DECK PLAN AT RAIL ANCHORAGE

NOTES

Prestressing steel shall be uncoated high strength, low relaxation 7-wire strand, Grade 270.
The nominal diameter shall be ½" and the nominal cross-sectional area shall be 0.153 sq. in.
Lifting loops shall be 2-½" ϕ-270 ksi strands, as shown.
Non prestressing steel shall conform to ASTM A 706 Grade 60. (IL Modified). See Special Provisions.
The bearing seat surfaces shall be adjusted by shimming to assure firm and even bearing. Two ⅛" fabric adjusting shims of the dimensions of the Exterior Bearing Pad shall be provided for each bearing.
Keyway surfaces shall be cleaned to remove form oil or other bond breaking material prior to shipment of the beams. Cleaning shall be done by sandblasting the keyway areas between top of the beam and the bottom edge of the key.
Corrosion Inhibitor, according to Article 1020.05(b)(12) of the Standard Specifications, shall be used in the concrete for precast prestressed concrete deck beams.
Required Release Strength, f'ci, shall be 4000 p.s.i.
See Sheet 8 of 16 for rail anchorage loactions.
The 1" ϕ rods in the transverse tie assembly shall be tightened to a snug fit and the threads set. Pockets that receive transverse tie bar on outside shall be filled with grout after transverse assembly is in place.
Non-shrink grout shall be used in all longitudinal keyways and drilled dowel holes and between bottom of beams and top of pier and abutment.

BILL OF MATERIAL

Precast Prestressed Conc. Deck Bms. (27" Depth)	Sq. Ft.	2512

DECK BEAM DETAILS _ SPAN 2
F.A.P. ROUTE 315 - (U.S. 136)
OVER PRAIRIE CREEK
SECTION 116(BR-2)
LOGAN COUNTY
STA. 314+50.00
S.N. 054-0025

PLOT DATE = 7/9/2007
FILE NAME = c:\Projects\d652985\allen.henderson.fund\sht 843-858.dgn
MODEL NAME = 692187-72997-000-000-005