CONTRACT NO. 83985

F.A.U. RTE.	SECTION	COUNTY	TOTAL SHEETS	SHEET NO.
1512	05-00093-00-WR	DUPAGE	72	51
STA. 119+00		TO STA. 127+00		
FED. ROAD DIST. NO. 1 ILLINOIS		FED. AID PROJECT		

PROJECT NO.: M-8003 (699)

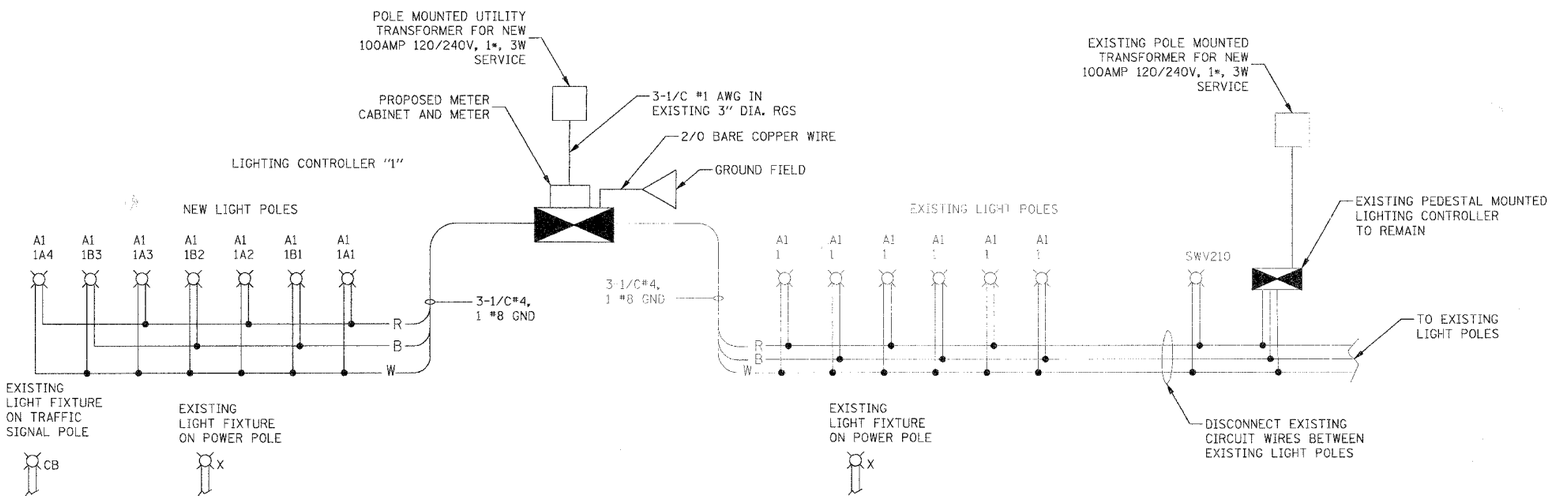

LEGEND

- SINGLE 150W HPS LUMINAIRE - 120V, DESIGNATION AS INDICATED
- LIGHTING CONTROLLER
- UTILITY TRANSFORMER
- B BLACK PHASE CONDUCTOR
- W WHITE NEUTRAL CONDUCTOR
- R RED PHASE CONDUCTOR
- G GREEN GROUND CONDUCTOR

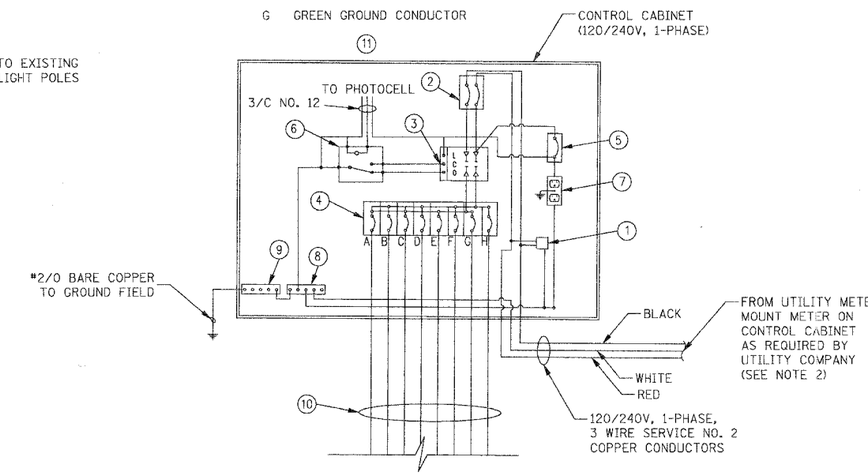

PROPOSED CONTROL CABINET TYPICAL SCHEMATIC DIAGRAM

NOTES:

1. THIS DIAGRAM IS GENERAL IN NATURE. THE CONTRACTOR SHALL SUPPLY SHOP DRAWINGS AND CATALOGUE CUTS FOR THE SPECIFIC EQUIPMENT TO BE USED TO THE VILLAGE FOR THEIR APPROVAL PRIOR TO THE START OF CONSTRUCTION.
2. AVAILABLE SHORT CIRCUIT CURRENT FROM UTILITY, APPROXIMATELY 15,000 KAIC

CONTROL CABINET LEGEND

1. 10,000 AMP SURGE ARRESTOR (ELECTRONIC GUARD, EG 240 RC BY INTERMATIC)
2. 100 AMP, 2 POLE MAIN CIRCUIT BREAKER, 240V, 22KAIC (TYPE "TEB" BY GENERAL ELECTRIC OR TYPE "FAL" BY SQUARE D)
3. 100 AMP, 2 POLE SINGLE THROW. ELECTRICALLY OPERATED, MECHANICALLY HELD CONTACTOR (GENERAL ELECTRIC OR SQUARE D)
4. EIGHT 40AMP, 1 POLE CIRCUIT BREAKERS, 240V, 22KAIC (TYPE "TEB" BY GENERAL ELECTRIC OR TYPE "FAL" BY SQUARE D)
5. 15AMP, 1 POLE CIRCUIT BREAKER, 240V, 22KAIC (TYPE "TEB" BY GENERAL ELECTRIC OR APPROVED EQUAL)
6. CONTROL RELAY, 120 V COIL, CONTACTS RATED 10A AT 120 VAC, HERMETICALLY SEALED
7. 15AMP, 120V, DUPLEX GFCI OUTLET
8. 1" X 12" NEUTRAL STRIP LABELED "NEUTRAL" AND JOINED TO THE GROUND STRIP WITH A BONDING JUMPER
9. 1" X 12" GROUND STRIP LABELED "GROUND" AND PAINTED GREEN
10. 1 #8 GROUND WIRE REQUIRED FOR EACH CIRCUIT. GROUND WIRE NOT SHOWN FOR SAKE OF CLARITY
11. PHOTOCELL MOUNTED ON POLE TOP OF NEAREST LIGHT POLE. PHOTOCELL AND 3/C NO. 12 TO CONROLLER INCLUDED IN LIGHTING CONTROLLER PAY ITEM.

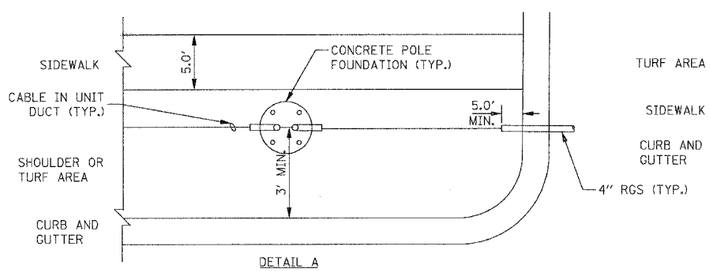

DETAIL A

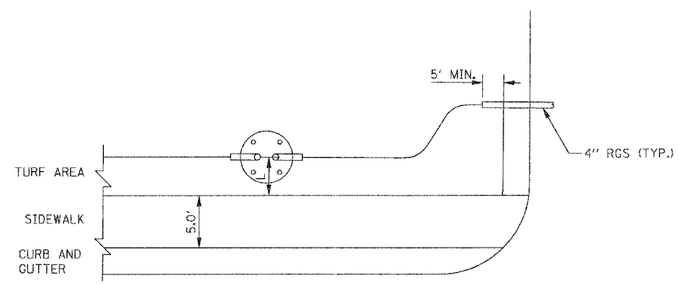

DETAIL C L= 1.0' OR AS DIRECTED BY THE ENGINEER

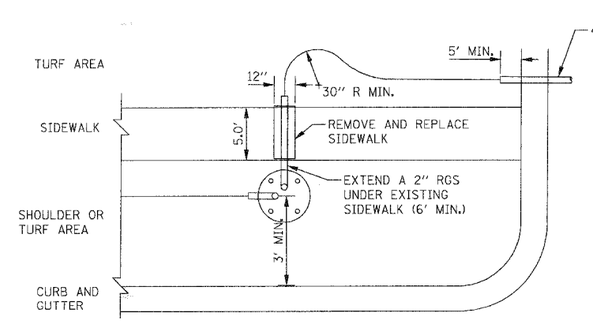

DETAIL B

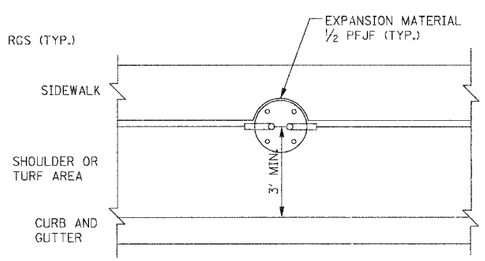

DETAIL D

NOTES:

1. CONDUIT SHALL BE INSTALLED MINIMUM 2'-0" FROM PAVEMENT EDGE.
2. CONTRACTOR SHALL MAKE AN EFFORT TO INSTALL RGS CONDUITS (UNDER DRIVEWAYS OR ROADWAY) AT THE SAME SIDE OF THE SIDEWALK AS THE POLE FOUNDATION (DETAIL A).
3. WHEN IT IS NECESSARY TO CROSS THE EXISTING SIDEWALK, CONTRACTOR SHALL INSTALL A 4" RGS CONDUIT PERPENDICULAR TO THE SIDEWALK (DETAIL B).
4. WHEN THE LOCATION OF A POLE FOUNDATION FALLS COMPLETELY WITHIN THE EXISTING SIDEWALK, THE CONTRACTOR SHALL CONSTRUCT THE FOUNDATION AT THE SIDE OF THE SIDEWALK AWAY FROM THE ROAD (DETAIL C). WHEN PARTIAL OVERLAP OCCURS, THE CONTRACTOR SHALL CONSTRUCT THE POLE FOUNDATION AS SHOWN ON DETAIL D.
5. THE LOCATIONS SHOWN IN THE DETAILS ARE APPROXIMATE AND SHALL BE FIELD COORDINATED DURING CONSTRUCTION.

TYPICAL CONDUIT INSTALLATION DETAILS NEAR INTERSECTIONS

PLAN: SURVEYED / PLOTTED / ALIGNMENT CHECKED / BASE MAP CHECKED / CADD FILE NAME / NOTE BOOK / NO. / BY / DATE

PROFILE: SURVEYED / PLOTTED / GRADES CHECKED / BASE MAP CHECKED / STRUCTURE NOTATIONS CHKD / NOTE BOOK / NO. / BY / DATE

PLOT DATE = $DATE$
FILE NAME = $FILEL$
PLOT SCALE = $SCALEL$
PLOT SCALE = $SCALEB$
USER NAME = $USERN$

REVISIONS	
NAME	DATE

ILLINOIS DEPARTMENT OF TRANSPORTATION

VILLAGE OF WESTMONT
59TH STREET RECONSTRUCTION

ELECTRICAL DETAILS
SHEET 3 OF 5

SCALE: N.T.S. DRAWN BY: FO
DATE: 09/21/07 CHECKED BY: DEM

E-10 | 10 OF 12