ROUTE NO.	SECTION	COUNTY	TOTAL SHEETS	SHEET NUMBER
ILLINOIS ROUTE 1	06-00063-00-SW	EDGAR	28	27

F.H.W.A. REG. | ILLINOIS | PROJECT TE-0005(83)

CONTRACT NO. 91375

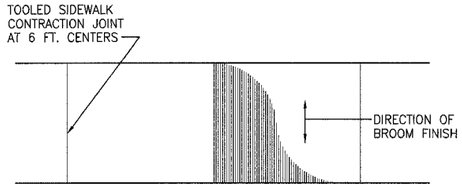

SIDEWALK FINISHING

(PRONOUNCED EDGING)
NO SCALE

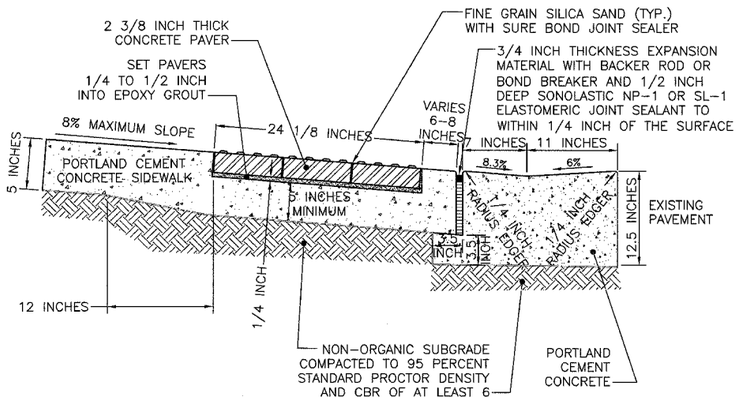

DETECTABLE WARNING SURFACE AND DEPRESSED BARRIER CURB AT SIDEWALK RAMPS

NO SCALE

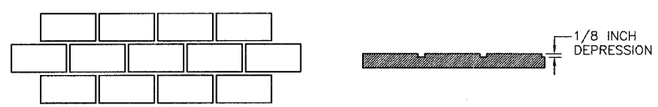

BRICK MOLD TEMPLET
4 INCH x 8 INCH OPENING
1/2 INCH WIDE FRAME

PLAN VIEW

SIDE VIEW

DETAIL OF BRICK MOLD

NO SCALE

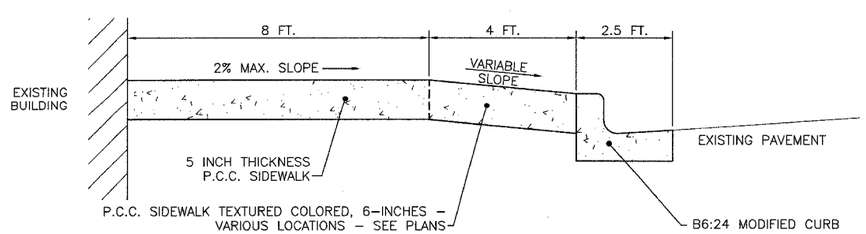

TYPICAL SIDEWALK CROSS-SECTION

NO SCALE

PORTLAND CEMENT CONCRETE PAVEMENT NOTES

1. EXPANSION MATERIAL SHALL BE NATURAL GREY HOMEX 300 MANUFACTURED BY THE HOMOSITE CO. OR APPROVED EQUAL.
2. JOINT SEALANT SHALL BE SONOLASTIC NP-1 JOINT FILLER MANUFACTURED BY SONNEBORN. JOINTS SHALL BE SEALED TO WITHIN 1/8 INCH OF THE SURFACE.

PORTLAND CEMENT CONCRETE CURB NOTES

1. JOINT SEALANT SHALL BE SONOLASTIC NP-1 JOINT FILLER MANUFACTURED BY SONNEBORN. JOINTS SHALL BE SEALED TO WITHIN 1/8 INCH OF THE FINISHED SURFACE.
2. ALL SAW CUTS SHALL BE MADE WITHIN 8 HOURS OF THE PLACEMENT OF THE CONCRETE.

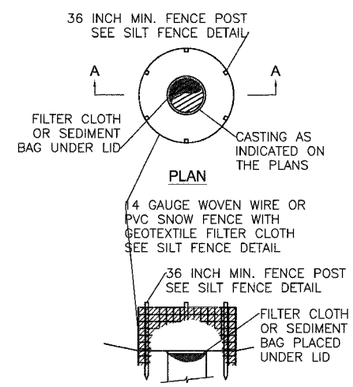

SECTION A - A

INLET EROSION CONTROL

NO SCALE

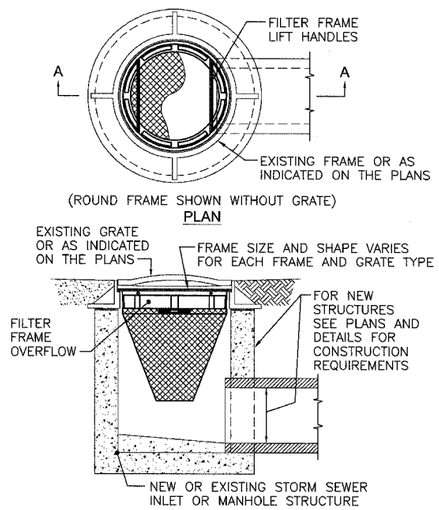

SECTION A - A

NOTES:

1. FILTER FRAMES FOR SEDIMENT BAGS SHALL BE SHAPED TO FIT INTO THE REQUIRED INLET OR MANHOLE FRAME AND GRATES. THE FILTER FRAME SHALL HAVE AN OVERFLOW FEATURE. THE SEDIMENT BAGS SHALL HAVE A SUPPORTING NET CAPABLE OF SUPPORTING A FULL SEDIMENT BAG.
2. CONTRACTOR WILL BE REQUIRED TO CHECK AND EMPTY SEDIMENT BAGS AFTER EACH RAIN AND AT SUCH INTERVALS NEEDED TO CONTROL SILT BUILDUP. THE CONTRACTOR SHALL REPLACE ANY DAMAGED SEDIMENT BAGS WHEN DISCOVERED.

STORM SEWER STRUCTURE SEDIMENT BAG INSTALLATION

NO SCALE

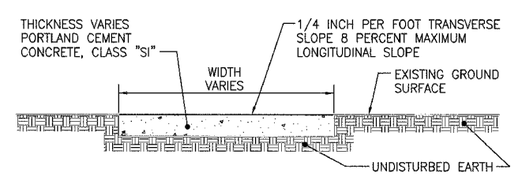

NOTES:

1. 3/4 INCH THICKNESS PREMOLDED EXPANSION JOINT SHALL BE PLACED AT 48 FOOT INTERVALS.
2. SIDEWALK SHALL BE HAND GROOVED 1 INCH DEEP AT INTERVALS DESIGNATED BY THE ENGINEER AND EDGED WITH AN EDGING TOOL.

TYPICAL SIDEWALK CROSS SECTION

NO SCALE

REVISIONS	
NAME	DATE

ILLINOIS DEPARTMENT OF TRANSPORTATION

2008 STREETSCAPE IMPROVEMENT PROJECT
CITY OF PARIS, ILLINOIS

DETAILS AND NOTES

SCALE: AS NOTED | DRAWN BY: SDS
DATE: 101207 | DESIGNED BY: MCG/ELC

© 2007 ALL RIGHTS RESERVED
BERNS, CLANCY AND ASSOCIATES, P.C.

JOB: 5556-12 | DATE: 101207
FILE: 5556-S27.DWG