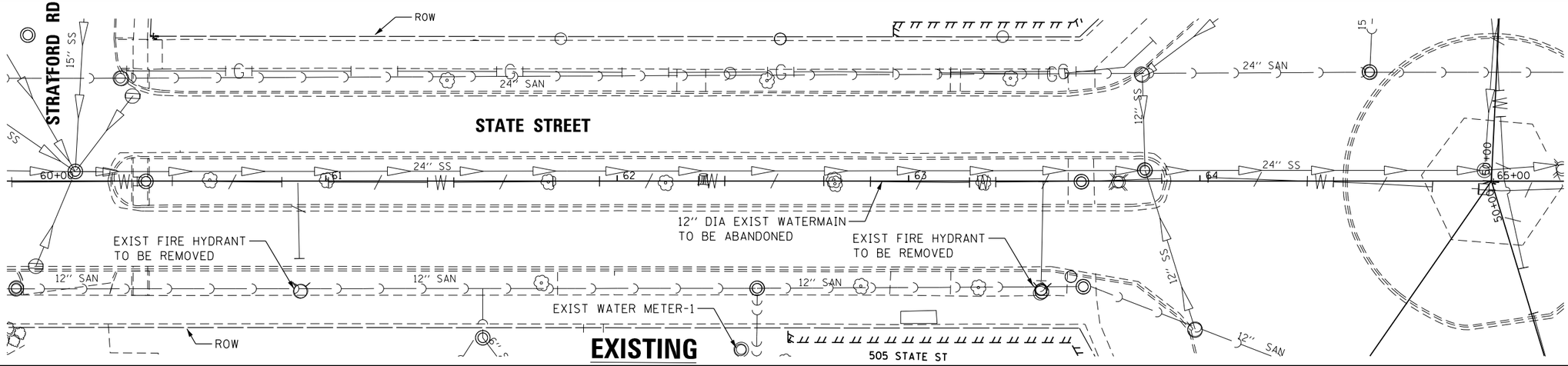

EXISTING

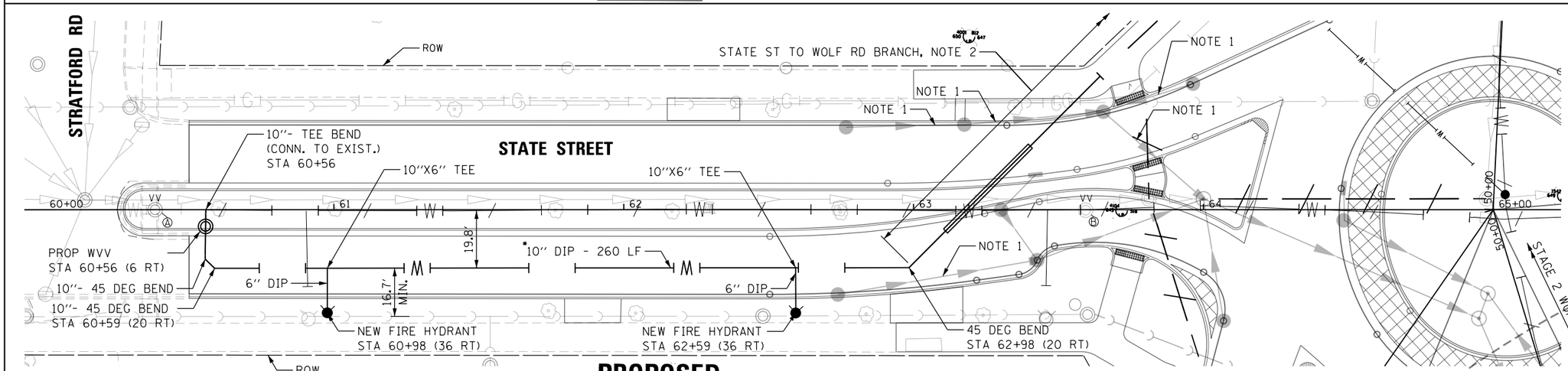

PROPOSED

NOTES

1. STORM SEWER IS TO BE CONSTRUCTED WITH STORM SEWER (WATERMAIN REQUIREMENT) SEE DRAINAGE PLANS AND SCHEDULE

2. SEE PROPOSED WATERMAIN PLAN AT ROUNDABOUT

3. SEE NOTE 2 AND 3 ON SHEET 96

4. ADDITIONAL PRESSURE CONNECTION TO EXISTING WATERMAIN HAS BEEN PROVIDED AND SHALL BE USED AS REQUIRED AT THE DISCRETION OF THE CITY OF DES PLAINES.

•LENGTH PROVIDED IS APPROXIMATE

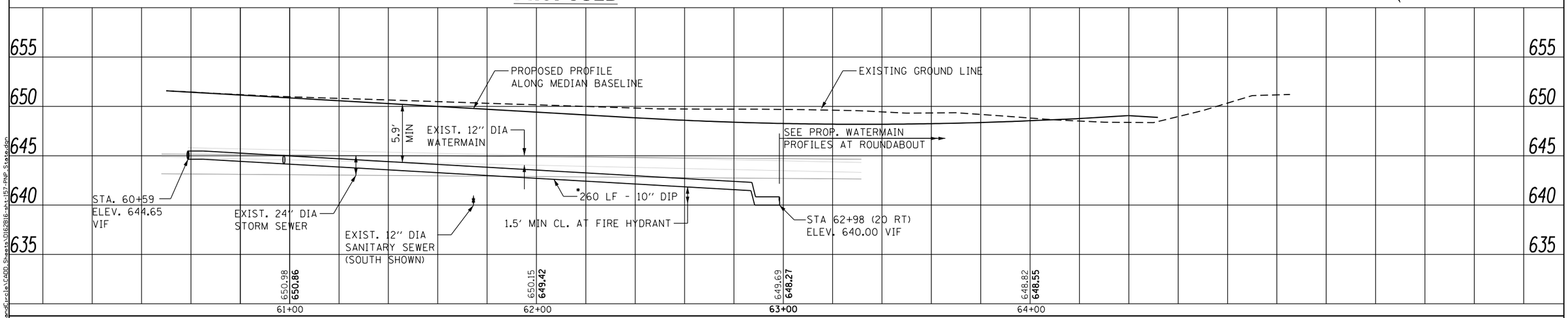

P:\1581-638 W07 CumberlandCircle\CADD Sheets\0162B16-sht-157-PNP-State.dgn

HBM ENGINEERING GROUP, LLC	USER NAME = Kendrabant	DESIGNED - MAA	REVISED -	STATE OF ILLINOIS DEPARTMENT OF TRANSPORTATION	PROP. WATERMAIN PLAN AND PROFILE STATE ST
		DRAWN - MAA, SK	REVISED -		
	PLOT SCALE = 40.0000 ' / in.	CHECKED - JMG	REVISED -		
	PLOT DATE = 12/1/2017	DATE - 05/10/2017	REVISED -		SCALE: SHEET 8 OF 10 SHEETS STA. TO STA.

F.A.P. RTE.	SECTION	COUNTY	TOTAL SHEETS	SHEET NO.
339	583-R	COOK	186	101
		CONTRACT NO. 62B16		
		ILLINOIS FED. AID PROJECT		

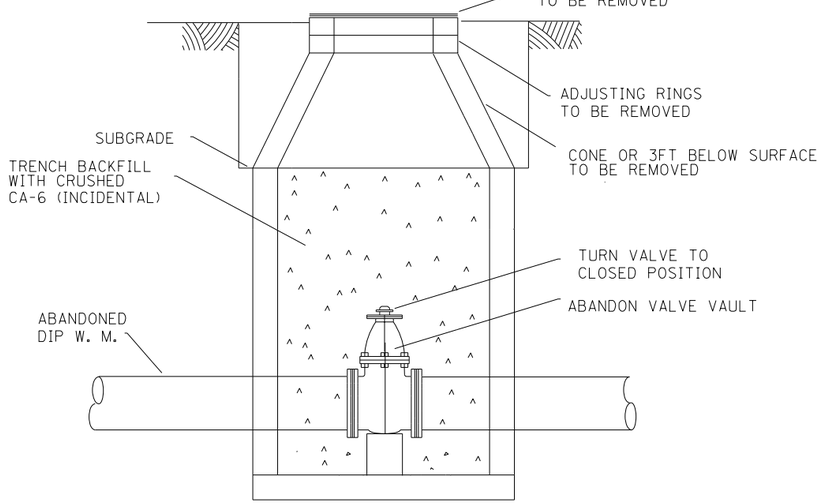

VALVE VAULT ABANDONMENT DETAIL

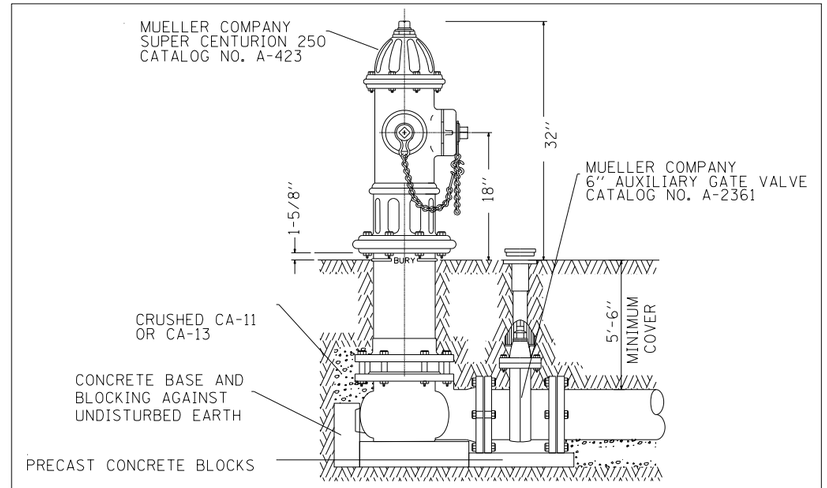

TYPICAL HYDRANT INSTALLATION

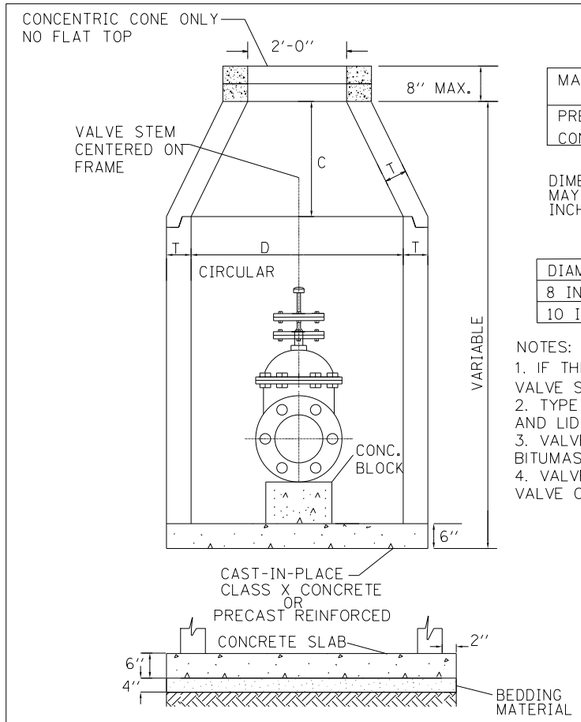

MATERIAL FOR WALLS	D	C	T (MIN.)
PRECAST REINFORCED	4'-0"	2'-6"	4"
CONCRETE RISERS	5'-0"	3'-9"	5"

DIMENSION C FOR PRECAST REINFORCED CONCRETE RISERS MAY VARY FROM THE DIMENSION GIVEN TO PLUS SIX INCHES.

DIAMETER OF WATER MAIN	D
8 INCHES AND UNDER	4'-0"
10 INCHES AND OVER	5'-0"

NOTES:
1. IF THE VALVE STEM IS GREATER THAN 5' IN DEPTH, A VALVE STEM EXTENSION TO 5' IS REQUIRED.
2. TYPE A VALVE VAULT SHALL BE PROVIDED WITH FRAME AND LID AS SHOWN IN GENERAL NOTES.
3. VALVE VAULT JOINTS SHALL BE SEALED WITH BITUMASTIC JOINTS.
4. VALVE SHALL BE MUELLER A-2360 RESILIENT SEAT VALVE ONLY.

STANDARD DESIGN FOR VALVE VAULT (TYPE A)

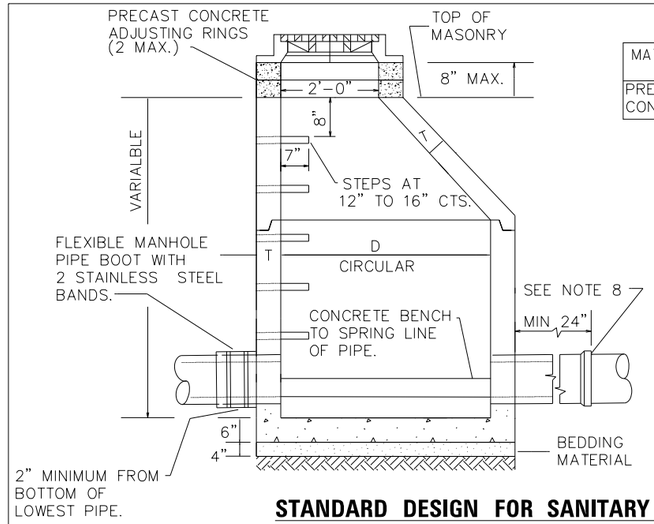

MATERIAL FOR WALLS	D	T (MAX.)
PRECAST REINFORCED	4'-0"	4"
CONCRETE RISERS	5'-0"	5"

NOTES:
1. FRAME, ADJUSTING RINGS, & ALL MANHOLE SECTIONS TO BE JOINED WITH "E-Z-STICK MATERIALS," ASSHTO M198 TYPE B, PRESS SEAL CORP., FT. WAYNE, INDIANA OR APPROVED EQUAL.
2. SANITARY MANHOLE LIDS TO BE IMPRINTED WITH "CITY OF DES PLAINES SANITARY".
3. ALL MANHOLE SECTIONS SHALL BE PRECAST REINFORCED CONCRETE.
4. FRAME AND LID SHALL BE CLOSED AS SHOWN IN GENERAL NOTES.
5. ALL LIFTING HOLES SHALL BE SEALED WITH BITUMASTIC MATERIAL.
6. USE ECCENTRIC CONE ONLY.
7. BOTTOM SECTION SHALL BE MONOLITHIC WITH PRECAST FLEXIBLE BOOTS CONFORMING TO ASTM 923.
8. LENGTH OF SANITARY SEWER PIPE ADJACENT TO SANITARY MANHOLE SHALL BE A MINIMUM OF 24 INCHES IN LENGTH.
9. FRAMES AND LIDS FOR MANHOLES WITHIN THE FLOOD PLAIN SHALL BE WATER TIGHT, LOCKING LID TYPE.

STANDARD DESIGN FOR SANITARY MANHOLE

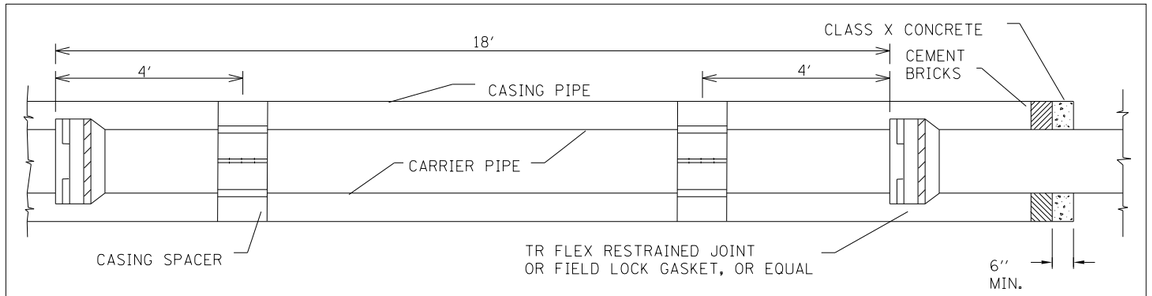

CARRIER PIPE & PIPE CASING BULKHEAD DETAIL

P:\1581-638 W07 Cumberland-Circle\CADD_Sheets\D162B16-sht-158-Details1.dgn

HBM ENGINEERING GROUP, LLC

USER NAME = Ken.drabant	DESIGNED -	REVISED - 12/01/2017	
	DRAWN -	REVISED -	
PLOT SCALE = 2:0.0000 ':' / in.	CHECKED -	REVISED -	
PLOT DATE = 12/1/2017	DATE - 10/17/2017	REVISED -	

STATE OF ILLINOIS
DEPARTMENT OF TRANSPORTATION

STANDARD WATERMAIN AND SANITARY SEWER DETAILS

SCALE: | SHEET 9 OF 10 SHEETS | STA. TO STA.

F.A.P. RTE.	SECTION	COUNTY	TOTAL SHEETS	SHEET NO.
339	583-R	COOK	186	102
		CONTRACT NO. 62B16		
		ILLINOIS FED. AID PROJECT		

NOTE:
MATERIALS FOR SANITARY SERVICE SHALL BE AS SHOWN ON APPROVED PLAN.

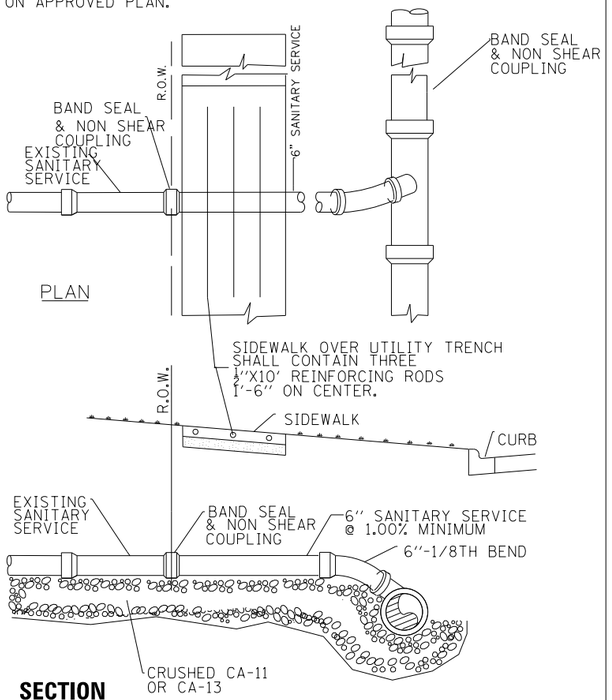

SECTION

SANITARY SERVICE SEWER AND CONNECTION

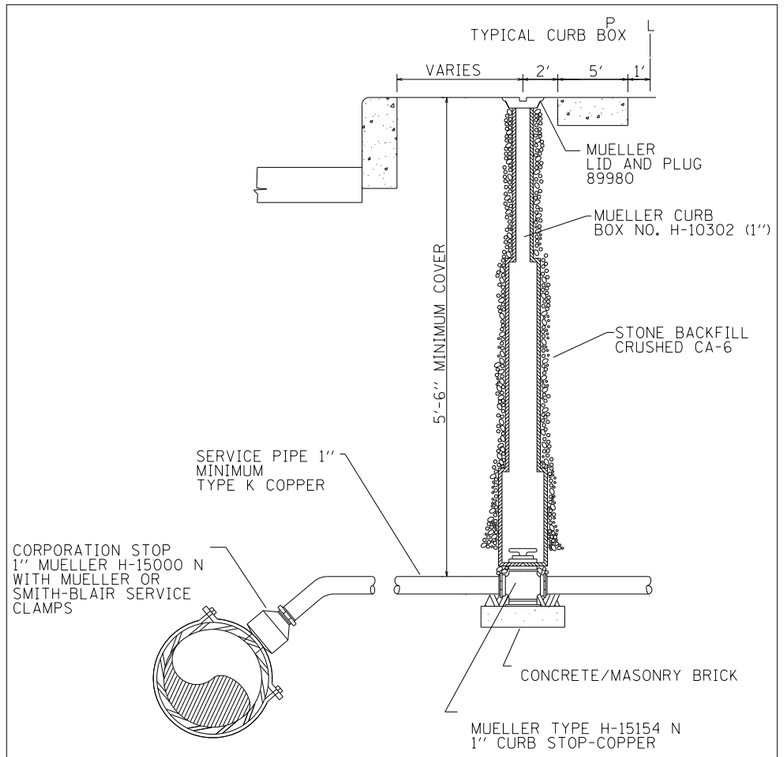

TYPICAL CURB BOX INSTALLATION
HOUSE WATER SERVICE

NOTE: COPPER PIPE & CURB STOP TO BE REMOVED WHEN NEW MAIN IS PLACED IN SERVICE.

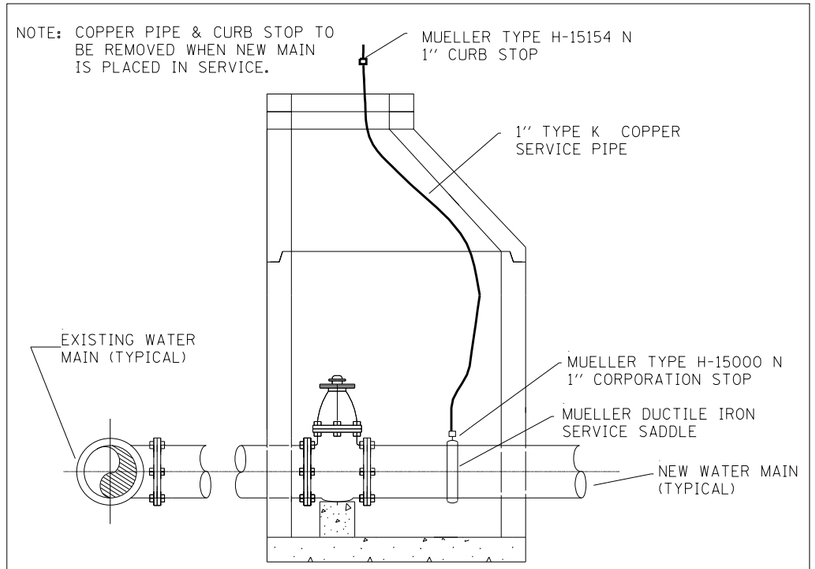

DISINFECTION/FLUSHING–TAP DETAIL– INCIDENTAL

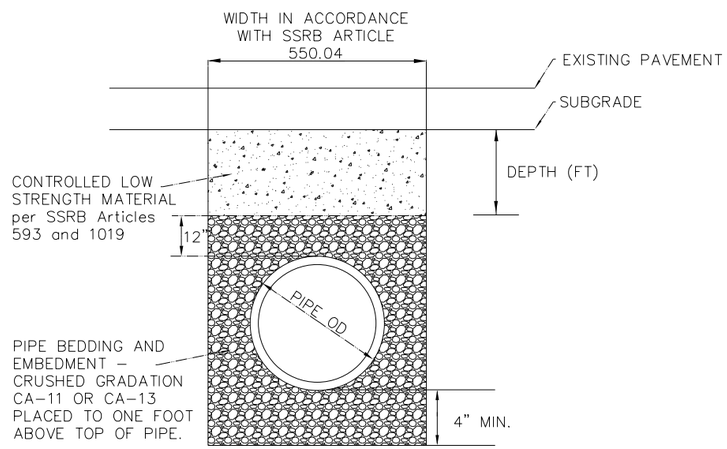

CONTROLLED LOW STRENGTH MATERIAL
TRENCH BACKFILL DETAIL
ALL PIPE TYPES

ALL TRENCH BACKFILL WILL BE MEASURED USING THE IDOT TRENCH BACKFILL TABLES

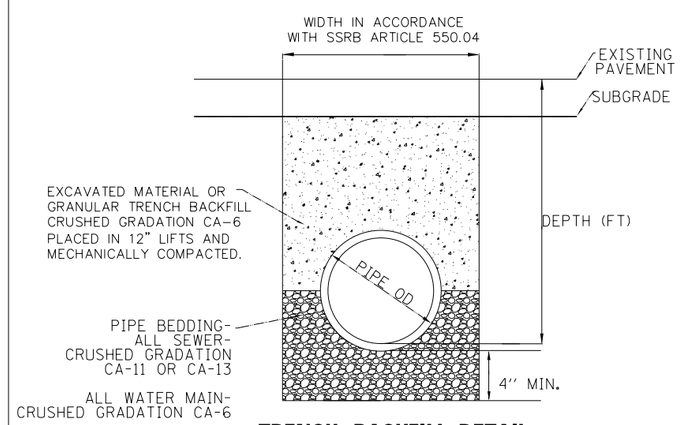

TRENCH BACKFILL DETAIL
ALL SEWER AND WATER (EXCEPT PVC)

ALL TRENCH BACKFILL WILL BE MEASURED USING THE IDOT TRENCH BACKFILL TABLES

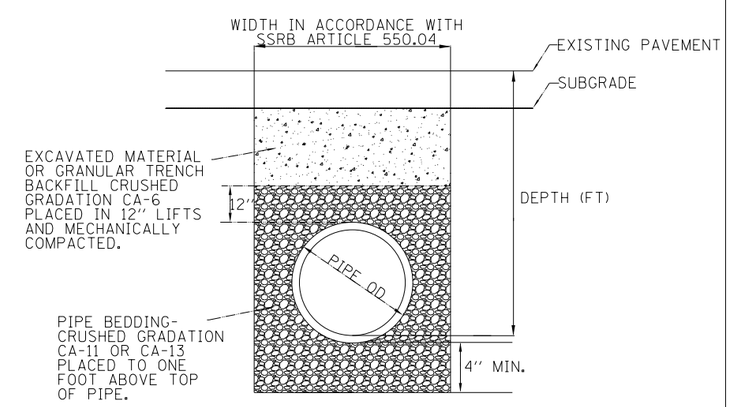

TRENCH BACKFILL DETAIL
PVC SEWER

P:\1501-630 W07 Cumberland-Circle\CADD\Sheets\D162B16-sht-159-Details2.dgn

HBM ENGINEERING GROUP, LLC	USER NAME = Ken.drabant	DESIGNED -	REVISED - 12/01/2017	STATE OF ILLINOIS DEPARTMENT OF TRANSPORTATION	STANDARD WATERMAIN AND SANITARY SEWER DETAILS	F.A.P. RTE.	SECTION	COUNTY	TOTAL SHEETS	SHEET NO.
		DRAWN -	REVISED -			339	583-R	COOK	186	103
	PLOT SCALE = 2:0.0000 ':' / in.	CHECKED -	REVISED -					CONTRACT NO. 62B16		
	PLOT DATE = 12/1/2017	DATE - 10/17/2017	REVISED -		SCALE: SHEET 10 OF 10 SHEETS STA. TO STA.		ILLINOIS	FED. AID PROJECT		

PARCEL NUMBER	OWNER	SHEET NUMBER	PROPERTY ACQUIRED BY
OKP0001TE	KB HOMES, LLC	2, 3	
OKP0002TE	HAROLD M. KONSTANTELOS AND KIKI KONSTANTELOS, HUSBAND AND WIFE, IN JOINT TENANCY	2, 3	
OKP0003TE	ELIZABETH R. ZARZYCKA, A SINGLE WOMAN	2, 3	
OKP0004TE	GEORGE J. THIRUNELLIPARAMBIL AND SALIMOLE PHILIP, HUSBAND AND WIFE, IN TENANCY BY THE ENTIRETY	2, 4	
OKP0005TE	CAREY T. SCHUG	2, 4	
OKP0006TE	ROY KANDA AND KAY KANDA, HIS WIFE, IN JOINT TENANCY	2, 4	
OKP0007TE	JOSE L. DIAZ AND TERESA DIAZ, MARRIED TO EACH OTHER, AS TENANTS IN COMMON	2, 4	
OKP0009 OKP0009TE	ROMANIAN BAPTIST CHURCH OF CHICAGO, AN ILLINOIS NOT-FOR-PROFIT CORPORATION	2, 5	
OKP0011 OKP0011TE	GHODRAT SARRAFI	2, 6	
OKP0012TE	GHODRAT SARRAFU	2, 6	

STATE OF ILLINOIS
DEPARTMENT OF TRANSPORTATION
DIVISION OF HIGHWAYS

PLAT OF HIGHWAYS

ROUTE: IL 58
SECTION:
COUNTY: COOK
LIMITS: AT WOLF ROAD
JOB NO.: R-90-007-14

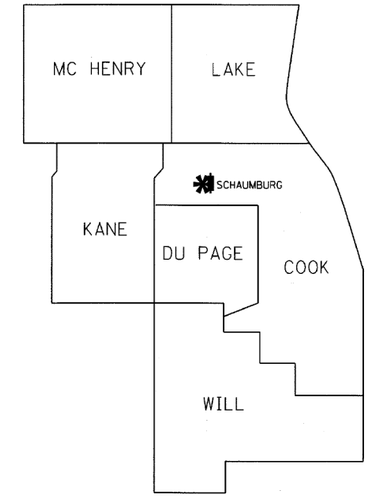

DISTRICT HEADQUARTERS: –
LOCATION OF SECTION INDICATED THUS: –

PRINTED BY THE AUTHORITY OF THE STATE OF ILLINOIS

SECTION 7
RANGE 12 EAST

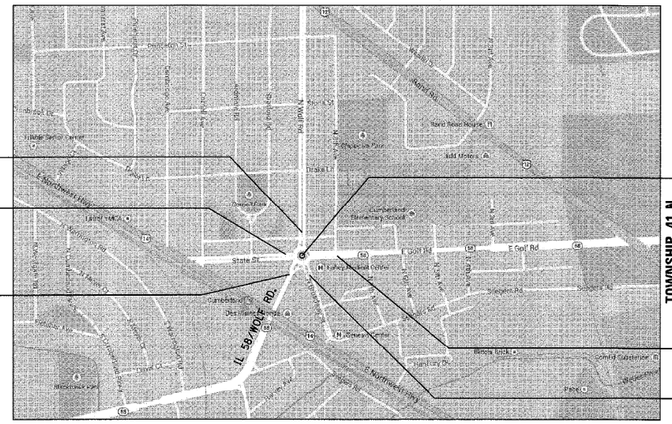
N
TOWNSHIP 41 N
IL 58 / WOLF RD.
Golf Rd
E Golf Rd
State St
Broadway Ave
Illinois Route
Hard Road House
Add Motors
Cumberland
Elementary School
Illinois Tollway
Des Plaines River
Illinois Route
Illinois Tollway
Illinois Tollway
Illinois Tollway

PART OF THE SE 1/4 OF SECTION 7, TWP. 41 N., R. 12 E. OF THE 3RD. P.M., IN COOK COUNTY, ILLINOIS.

PROJECT COORDINATES
ILLINOIS STATE PLANE, EAST ZONE, NAD 83 (2007)

STATION	NORTHING	EASTING
WOLF		
100+00	1,962,446.60	1,099,149.59
100+80	1,962,520.22	1,099,180.92
101+24	1,962,562.31	1,099,168.24
102+12.52	1,962,650.09	1,099,158.29
104+09.06	1,962,846.63	1,099,157.87
58E		
200+00	1,962,446.60	1,099,149.59
200+83.12	1,962,417.15	1,099,227.32
201+83.12	1,962,433.12	1,099,272.59
202+25.08	1,962,451.19	1,099,364.45
204+10.25	1,962,459.90	1,099,549.42
BWAY		
300+00	1,961,878.71	1,099,343.42
304+11.40	1,962,266.01	1,099,204.70
305+05.82	1,962,348.96	1,099,160.30
306+04.05	1,962,446.61	1,099,149.59
58S		
400+00	1,961,913.77	1,098,875.82
403+77.55	1,962,255.95	1,099,035.36
404+56.23	1,962,329.18	1,099,064.01
405+26.93	1,962,396.52	1,099,085.54
406+08.24	1,962,446.61	1,099,149.59
SS1		
500+00	1,962,433.39	1,098,695.68
502+41.06	1,962,445.33	1,098,940.43
503+06.64	1,962,453.34	1,099,005.47
503+49.05	1,962,466.74	1,099,045.59
503+81.88	1,962,480.99	1,099,075.16
504+63.87	1,962,446.61	1,099,149.59
CIRCLE		
600+00	1,962,495.37	1,099,170.34
600+12.76	1,962,489.02	1,099,181.37
600+51.04	1,962,466.06	1,099,212.00
601+40.57	1,962,388.48	1,099,182.84
602+19.57	1,962,401.62	1,099,111.56
602+72.71	1,962,451.31	1,099,096.80
603+72.57	1,962,495.37	1,099,170.34

CP #1 FD 5/8" IR
N. 1,962,446.589
E. 1,099,149.561

CP #2 FD 1/2" IP
N. 1,962,473.524
E. 1,098,687.675

PROP. CURVE P_PGLWOLF1-1
PI STA. = 101+02.03
Δ = 7° 55' 38" (RT)
D = 18° 01' 03"
R = 318.00'
T = 22.03'
L = 44.00'
E = 0.76'
P.C. STA. = 100+80.00
P.C.C. STA. = 101+24.00

PROP. CURVE P_PGLWOLF1-2
PI STA. = 101+68.44
Δ = 12° 40' 49" (RT)
D = 14° 19' 26"
R = 400.00'
T = 44.44'
L = 88.53'
E = 2.46'
P.C.C. STA. = 101+24.00
P.T. STA. = 102+12.52

PROP. CURVE P_PGLCIRCLE-1
PI STA. = 600+06.41
Δ = 13° 47' 27" (RT)
D = 108° 06' 19"
R = 53.00'
T = 6.41'
L = 12.76'
E = 0.39'
P.C. STA. = 600+00.00
P.T. STA. = 600+12.76

PROP. CURVE P_PGLCIRCLE-2
PI STA. = 601+04.14
Δ = 77° 24' 46" (RT)
D = 86° 27' 22"
R = 66.27'
T = 53.11'
L = 89.54'
E = 18.65'
P.C. STA. = 600+51.04
P.C.C. STA. = 601+40.57

PROP. CURVE P_PGLSS1-1
PI STA. = 502+73.90
Δ = 8° 21' 00" (LT)
D = 12° 43' 57"
R = 450.00'
T = 32.85'
L = 65.58'
E = 1.20'
P.C. STA. = 502+41.06
P.C.C. STA. = 503+06.64

PROP. CURVE P_PGLSS1-2
PI STA. = 503+27.96
Δ = 14° 33' 06" (LT)
D = 34° 18' 32"
R = 167.00'
T = 21.32'
L = 42.41'
E = 1.36'
P.C.C. STA. = 503+06.64
P.T. STA. = 503+49.05

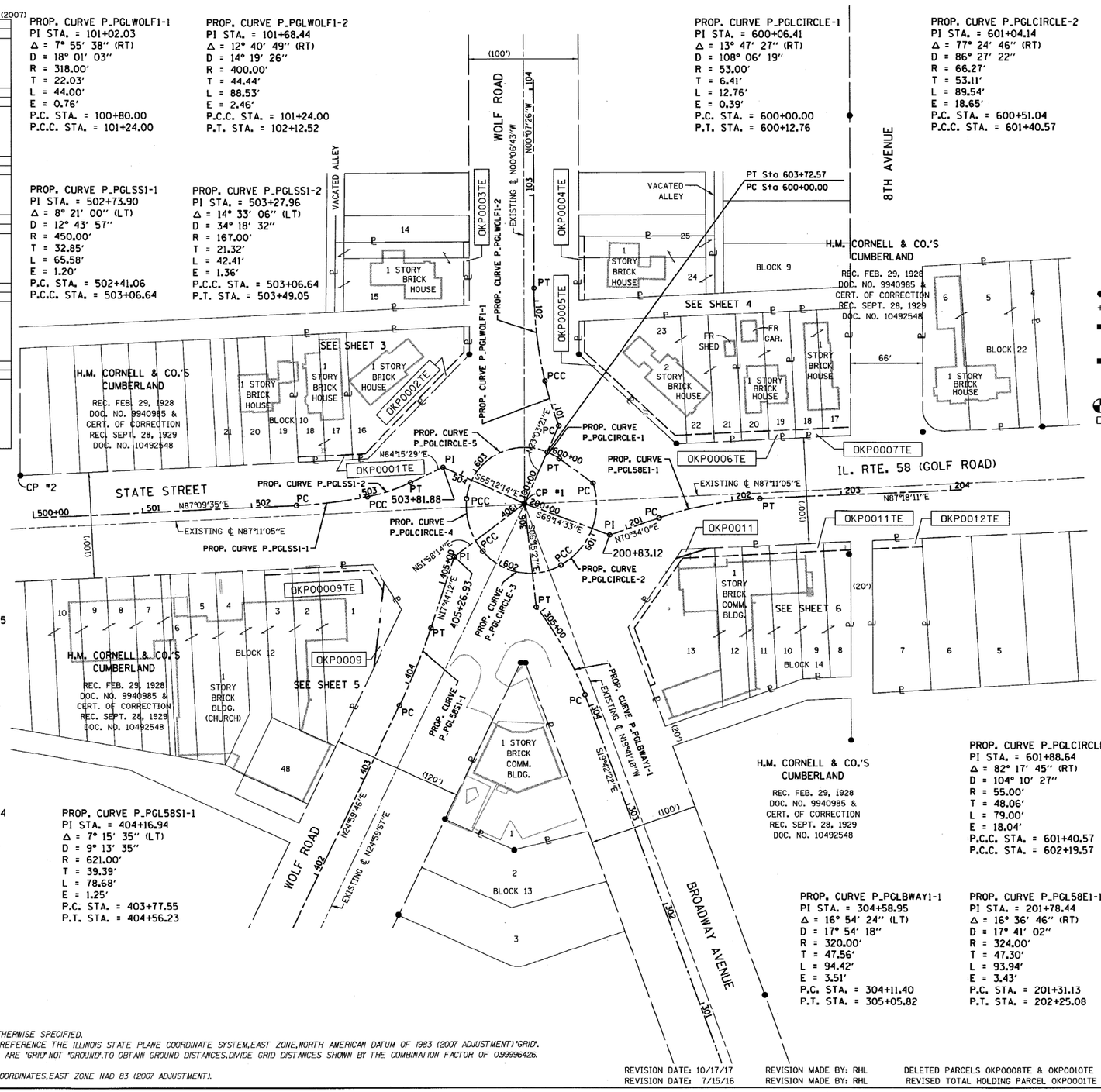

PROP. CURVE P_PGLCIRCLE-5
PI STA. = 603+45.60
Δ = 107° 57' 33" (RT)
D = 108° 06' 19"
R = 53.00'
T = 72.89'
L = 99.86'
E = 37.12'
P.C.C. STA. = 602+72.71
P.T. STA. = 603+72.57

PROP. CURVE P_PGLCIRCLE-4
PI STA. = 602+47.49
Δ = 43° 29' 25" (RT)
D = 81° 51' 04"
R = 70.00'
T = 27.92'
L = 53.13'
E = 5.36'
P.C.C. STA. = 602+19.57
P.C.C. STA. = 602+72.71

PROP. CURVE P_PGL58S1-1
PI STA. = 404+16.94
Δ = 7° 15' 35" (LT)
D = 9° 13' 35"
R = 621.00'
T = 39.39'
L = 78.68'
E = 1.25'
P.C. STA. = 403+77.55
P.T. STA. = 404+56.23

PROP. CURVE P_PGLCIRCLE-3
PI STA. = 601+88.64
Δ = 82° 17' 45" (RT)
D = 104° 10' 27"
R = 55.00'
T = 48.06'
L = 79.00'
E = 18.04'
P.C.C. STA. = 601+40.57
P.C.C. STA. = 602+19.57

PROP. CURVE P_PGLBWAY1-1
PI STA. = 304+58.95
Δ = 16° 54' 24" (LT)
D = 17° 54' 18"
R = 320.00'
T = 47.56'
L = 94.42'
E = 3.51'
P.C. STA. = 304+11.40
P.T. STA. = 305+05.82

PROP. CURVE P_PGL58E1-1
PI STA. = 201+78.44
Δ = 16° 36' 46" (RT)
D = 17° 41' 02"
R = 324.00'
T = 47.30'
L = 93.94'
E = 3.43'
P.C. STA. = 201+31.13
P.T. STA. = 202+25.08

LEGEND

SECTION CORNER
QUARTER SECTION CORNER
SECTION / QUARTER SECTION LINE
PLATTED LOT LINES
PROPERTY (DEED) LINE
APPARENT PROPERTY LINE
EXISTING CENTERLINE
PROPOSED CENTERLINE
EXISTING RIGHT OF WAY LINE
PROPOSED RIGHT OF WAY LINE
EXISTING EASEMENT
PROPOSED EASEMENT
EXISTING ACCESS CONTROL LINE
PROPOSED ACCESS CONTROL LINE
MEASURED DIMENSION
COMPUTED DIMENSION
RECORDED DIMENSION
EXISTING BUILDING

GRAPHIC SCALE FEET
SCALE: 1"= 50'

IRON PIPE OR ROD FOUND
CUT CROSS FOUND OR SET
'MAG' NAIL SET
5 / 8" REBAR SET

STAKING OF PROPOSED RIGHT OF WAY. SET DIVISION OF HIGHWAYS SURVEY MARKER TO MONUMENT THE POSITION SHOWN. IDENTIFIED BY INSCRIPTION DATA AND SURVEYORS REGISTRATION NUMBER.

STAKING OF PROPOSED RIGHT OF WAY IN CULTIVATED AREAS. BURIED 5/8 INCH METAL ROD 20 INCHES BELOW GROUND TO MARK FUTURE SURVEY MARKER POSITION IDENTIFIED BY COLORED PLASTIC CAP BEARING SURVEYORS REGISTRATION NUMBER.

PERMANENT SURVEY MARKER, I.D.O.T. STANDARD 2135 (TO BE SET BY OTHERS)

RIGHT OF WAY STAKING PROPOSED TO BE SET

STATE OF ILLINOIS)
)SS
COUNTY OF KANE)

THIS IS TO CERTIFY THAT I, REJENA LYON, AN ILLINOIS PROFESSIONAL LAND SURVEYOR, HAVE SURVEYED THE PLAT OF HIGHWAYS SHOWN HEREON IN SECTIONS 7, TOWNSHIP 41 NORTH, RANGE 12 EAST OF THE THIRD PRINCIPAL MERIDIAN, COOK COUNTY, THAT THE SURVEY IS TRUE AND COMPLETE AS SHOWN TO THE BEST OF MY KNOWLEDGE AND BELIEF, THAT THE PLAT CORRECTLY REPRESENTS SAID SURVEY, THAT ALL MONUMENTS FOUND AND ESTABLISHED ARE OF PERMANENT QUALITY AND OCCUPY THE POSITIONS SHOWN THEREON AND THAT THE MONUMENTS ARE SUFFICIENT TO ENABLE THE SURVEY TO BE RETRACED, MADE FOR THE DEPARTMENT OF TRANSPORTATION, STATE OF ILLINOIS.

REJENA H. LYON 3302 PROFESSIONAL LAND SURVEYOR STATE OF ILLINOIS ELGIN, ILLINOIS

DATED AT Elgin, ILLINOIS THIS 25th DAY OF October 2017 A.D.

Rejena H. Lyon

ILLINOIS PROFESSIONAL LAND SURVEYOR NO. 3302
LICENSE EXPIRATION DATE: NOV. 30, 2018

THIS PROFESSIONAL SERVICE CONFORMS TO THE CURRENT ILLINOIS MINIMUM STANDARDS FOR A BOUNDARY SURVEY, FOR THAT PART SHOWN AS PROPOSED RIGHT-OF-WAY.

FIELD WORK COMPLETED 9/8/2014.

HAMPTON, LENZINI AND RENWICK, INC.
CIVIL ENGINEERS· STRUCTURAL ENGINEERS· LAND SURVEYORS
380 SHEPARD DRIVE
ELGIN, ILLINOIS 60123
847.697.6700 www.hlrengineering.com
184.000959
ILLINOIS PROFESSIONAL DESIGN FIRM LS / PE / SE CORPORATION
JOB: 14.0117.230

ALL DIMENSIONS ARE MEASURED UNLESS OTHERWISE SPECIFIED.
BEARINGS AND DISTANCES SHOWN HEREON REFERENCE THE ILLINOIS STATE PLANE COORDINATE SYSTEM, EAST ZONE, NORTH AMERICAN DATUM OF 1983 (2007 ADJUSTMENT) "GRID".
ALL MEASURED AND CALCULATED DISTANCES ARE "GRID" NOT "GROUND". TO OBTAIN GROUND DISTANCES, DIVIDE GRID DISTANCES SHOWN BY THE COMBINATION FACTOR OF 0.99996426.
AREAS SHOWN ON THIS PLAT ARE GROUND.
COORDINATES ARE ILLINOIS STATE PLANE COORDINATES, EAST ZONE NAD 83 (2007 ADJUSTMENT).

REVISION DATE: 10/17/17 REVISION MADE BY: RHL DELETED PARCELS OKP0008TE & OKP0010TE
REVISION DATE: 7/15/16 REVISION MADE BY: RHL REVISED TOTAL HOLDING PARCEL OKP0001TE

IDOT USE ONLY

PLAT OF HIGHWAYS
STATE OF ILLINOIS
DEPARTMENT OF TRANSPORTATION
IL 58

LIMITS: AT WOLF ROAD COUNTY: COOK
SECTION: JOB NO.: R-90-007-14
STA. 500+00 TO STA. 204+00
SCALE: 1" = 50' SHEET 2 OF 6 SHEETS

BUREAU OF LAND ACQUISITION
201 WEST CENTER COURT
SCHAUMBURG, ILLINOIS 60196

P:\1581-630 WO7 CumberlandCircle\CADD Sheets\D162B16-sht-281-r-oaplat.2dgn

HBM ENGINEERING GROUP, LLC

USER NAME = Kendrabant	DESIGNED -	REVISED - 12/01/2017
	DRAWN -	REVISED -
PLOT SCALE = 2.0000 ' / in.	CHECKED -	REVISED -
PLOT DATE = 12/1/2017	DATE - 10/17/2017	REVISED -

STATE OF ILLINOIS
DEPARTMENT OF TRANSPORTATION

IL RTE 58 (GOLF RD) AT WOLF RD
PLAT OF HIGHWAY (SHEET 2 OF 6)

SCALE: SHEET 2 OF 6 SHEETS STA. TO STA.

F.A.P. RTE.	SECTION	COUNTY	TOTAL SHEETS	SHEET NO.
339	583-R	COOK	186	105
		CONTRACT NO. 62B16		
		ILLINOIS FED. AID PROJECT		

PART OF THE SE 1/4 OF SECTION 7, TWP. 41 N., R. 12 E. OF THE 3RD. P.M., IN COOK COUNTY, ILLINOIS.

PROP. CURVE P_PGLWOLF1-1
PI STA. = 101+02.03
Δ = 7° 55' 38" (RT)
D = 18° 01' 03"
R = 318.00'
T = 22.03'
L = 44.00'
E = 0.76'
P.C. STA. = 100+80.00
P.C.C. STA. = 101+24.00

PROP. CURVE P_PGLWOLF1-2
PI STA. = 101+68.44
Δ = 12° 40' 49" (RT)
D = 14° 19' 26"
R = 400.00'
T = 44.44'
L = 88.53'
E = 2.46'
P.C.C. STA. = 101+24.00
P.T. STA. = 102+12.52

PROP. CURVE P_PGLSS1-1
PI STA. = 502+73.90
Δ = 8° 21' 00" (LT)
D = 12° 43' 57"
R = 450.00'
T = 32.85'
L = 65.58'
E = 1.20'
P.C. STA. = 502+41.06
P.C.C. STA. = 503+06.64

PROP. CURVE P_PGLSS1-2
PI STA. = 503+27.96
Δ = 14° 33' 06" (LT)
D = 34° 18' 32"
R = 167.00'
T = 21.32'
L = 42.41'
E = 1.36'
P.C.C. STA. = 503+06.64
P.T. STA. = 503+49.05

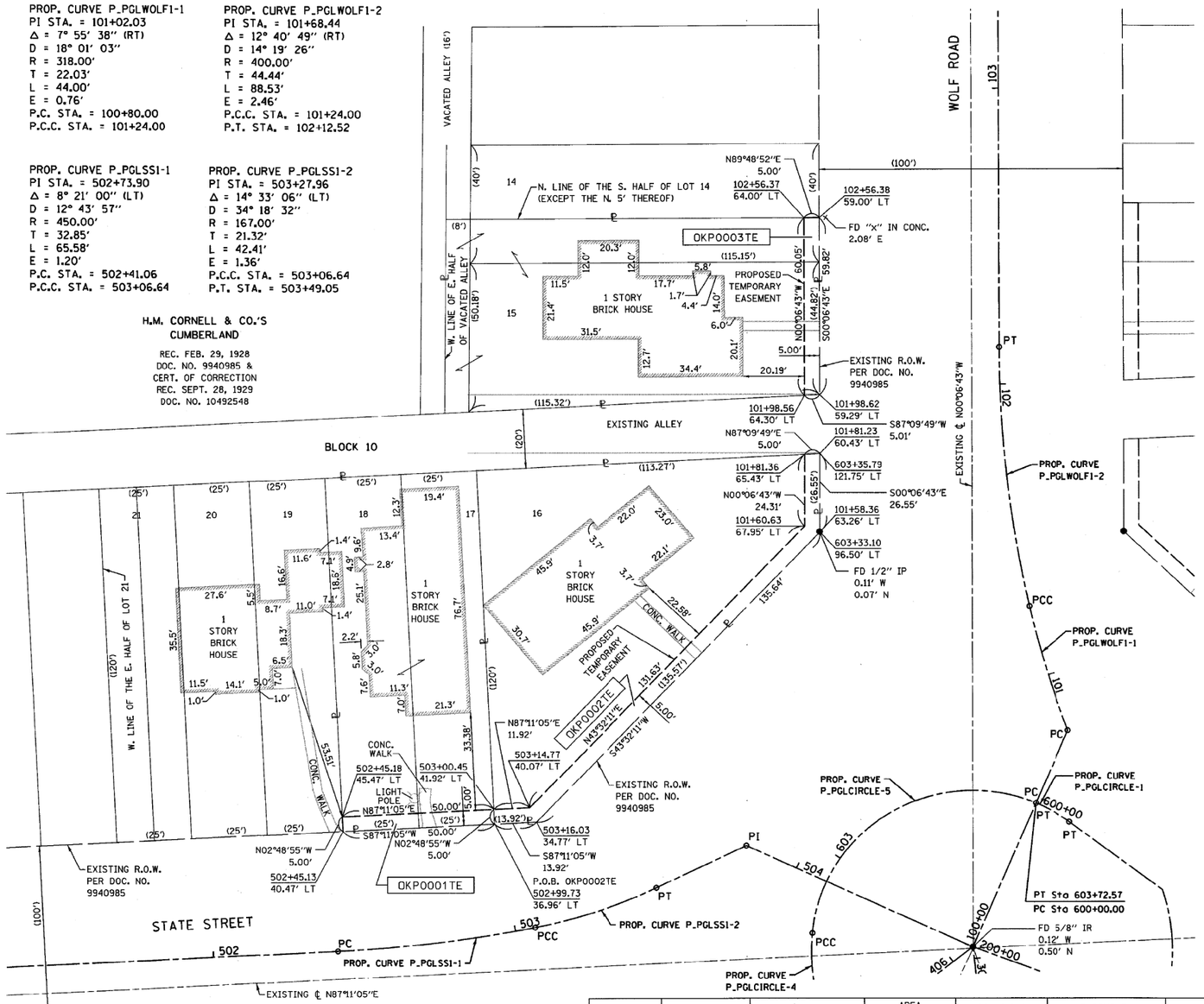

PROP. CURVE P_PGLCIRCLE-1
PI STA. = 600+06.41
Δ = 13° 47' 27" (RT)
D = 108° 06' 19"
R = 53.00'
T = 6.41'
L = 12.76'
E = 0.39'
P.C. STA. = 600+00.00
P.T. STA. = 600+12.76

PROP. CURVE P_PGLCIRCLE-4
PI STA. = 602+47.49
Δ = 43° 29' 25" (RT)
D = 81° 51' 04"
R = 70.00'
T = 27.92'
L = 53.13'
E = 5.36'
P.C.C. STA. = 602+19.57
P.C.C. STA. = 602+72.71

PROP. CURVE P_PGLCIRCLE-5
PI STA. = 603+45.60
Δ = 107° 57' 33" (RT)
D = 108° 06' 19"
R = 53.00'
T = 72.89'
L = 99.86'
E = 37.12'
P.C.C. STA. = 602+72.71
P.T. STA. = 603+72.57

LEGEND

SECTION CORNER
QUARTER SECTION CORNER

SECTION / QUARTER SECTION LINE
PLATTED LOT LINES
PROPERTY (DEED) LINE
APPARENT PROPERTY LINE
EXISTING CENTERLINE
PROPOSED CENTERLINE
EXISTING RIGHT OF WAY LINE
PROPOSED RIGHT OF WAY LINE
EXISTING EASEMENT
PROPOSED EASEMENT
EXISTING ACCESS CONTROL LINE
PROPOSED ACCESS CONTROL LINE
129.32' MEASURED DIMENSION
129.32' (COMP) COMPUTED DIMENSION
(129.32') RECORDED DIMENSION
EXISTING BUILDING

GRAPHIC SCALE FEET
SCALE: 1"= 50'

IRON PIPE OR ROD FOUND
'MAG' NAIL SET
CUT CROSS FOUND OR SET
5 / 8" REBAR SET

STAKING OF PROPOSED RIGHT OF WAY. SET DIVISION OF HIGHWAYS SURVEY MARKER TO MONUMENT THE POSITION SHOWN. IDENTIFIED BY INSCRIPTION DATA AND SURVEYORS REGISTRATION NUMBER.

STAKING OF PROPOSED RIGHT OF WAY IN CULTIVATED AREAS. BURIED 5/8 INCH METAL ROD 20 INCHES BELOW GROUND TO MARK FUTURE SURVEY MARKER POSITION IDENTIFIED BY COLORED PLASTIC CAP BEARING SURVEYORS REGISTRATION NUMBER.

PERMANENT SURVEY MARKER, I.D.O.T. STANDARD 2135 (TO BE SET BY OTHERS)

RIGHT OF WAY STAKING PROPOSED TO BE SET

STATE OF ILLINOIS)
)SS
COUNTY OF KANE)

THIS IS TO CERTIFY THAT I, REJENA LYON, AN ILLINOIS PROFESSIONAL LAND SURVEYOR, HAVE SURVEYED THE PLAT OF HIGHWAYS SHOWN HEREON IN SECTIONS 7, TOWNSHIP 41 NORTH, RANGE 12 EAST OF THE THIRD PRINCIPAL MERIDIAN, COOK COUNTY, THAT THE SURVEY IS TRUE AND COMPLETE AS SHOWN TO THE BEST OF MY KNOWLEDGE AND BELIEF, THAT THE PLAT CORRECTLY REPRESENTS SAID SURVEY, THAT ALL MONUMENTS FOUND AND ESTABLISHED ARE OF PERMANENT QUALITY AND OCCUPY THE POSITIONS SHOWN THEREON AND THAT THE MONUMENTS ARE SUFFICIENT TO ENABLE THE SURVEY TO BE RETRACED, MADE FOR THE DEPARTMENT OF TRANSPORTATION, STATE OF ILLINOIS.

REJENA H. LYON 3302 PROFESSIONAL LAND SURVEYOR STATE OF ILLINOIS ELGIN, ILLINOIS

DATED AT Elgin, ILLINOIS THIS 25th DAY OF October 2017 A.D.

ILLINOIS PROFESSIONAL LAND SURVEYOR NO. 3302
LICENSE EXPIRATION DATE: NOV. 30, 2018

THIS PROFESSIONAL SERVICE CONFORMS TO THE CURRENT ILLINOIS MINIMUM STANDARDS FOR A BOUNDARY SURVEY, FOR THAT PART SHOWN AS PROPOSED RIGHT-OF-WAY.

FIELD WORK COMPLETED 9/8/2014.

HAMPTON, LENZINI AND RENWICK, INC.
CIVIL ENGINEERS · STRUCTURAL ENGINEERS · LAND SURVEYORS
380 SHEPARD DRIVE
ELGIN, ILLINOIS 60123
847.697.6700 www.hlrengineering.com
184.000959
ILLINOIS PROFESSIONAL DESIGN FIRM LS / PE / SE CORPORATION
JOB: 14.0117.230

PARCEL NUMBER	TOTAL HOLDING	AREA TAKEN	AREA PREVIOUSLY USED	REMAINING AREA	EASEMENT AREA	PIN
OKP0001TE	0.138 Ac±	NA	NA	0.138 Ac±	0.006 Ac (250 SF)±	09-07-410-042 09-07-410-041
OKP0002TE	0.204 Ac±	NA	NA	0.204 Ac±	0.020 Ac±	09-07-410-043
OKP0003TE	0.177 Ac±	NA	NA	0.177 Ac±	0.007 Ac (300 SF)±	09-07-410-063

ALL DIMENSIONS ARE MEASURED UNLESS OTHERWISE SPECIFIED.
BEARINGS AND DISTANCES SHOWN HEREON REFERENCE THE ILLINOIS STATE PLANE COORDINATE SYSTEM, EAST ZONE, NORTH AMERICAN DATUM OF 1983 (2007 ADJUSTMENT) "GRID".
ALL MEASURED AND CALCULATED DISTANCES ARE "GRID" NOT "GROUND". TO OBTAIN GROUND DISTANCES, DIVIDE GRID DISTANCES SHOWN BY THE COMBINATION FACTOR OF 0.99996426.
AREAS SHOWN ON THIS PLAT ARE GROUND.
COORDINATES ARE ILLINOIS STATE PLANE COORDINATES, EAST ZONE NAD 83 (2007 ADJUSTMENT).

REVISION DATE: 7/15/16 REVISION MADE BY: RHL REVISED TOTAL HOLDING PARCEL OKP0001TE

IDOT USE ONLY

PLAT OF HIGHWAYS
STATE OF ILLINOIS
DEPARTMENT OF TRANSPORTATION
IL 58

LIMITS: AT WOLF ROAD COUNTY: COOK
SECTION: JOB NO.: R-90-007-14
STA. 90+00 TO STA. 97+00
SCALE: 1" = 20' SHEET 3 OF 6 SHEETS

BUREAU OF LAND ACQUISITION
201 WEST CENTER COURT
SCHAUMBURG, ILLINOIS 60196

P:\1581-638 W07 Cumberland Circle\CADD Sheets\D162B16-sht-202-roplat.3dgn

HBM ENGINEERING GROUP, LLC

USER NAME = Kendrabant	DESIGNED -	REVISED - 12/01/2017
	DRAWN -	REVISED -
PLOT SCALE = 2.0000 ' / in.	CHECKED -	REVISED -
PLOT DATE = 12/1/2017	DATE - 10/17/2017	REVISED -

STATE OF ILLINOIS
DEPARTMENT OF TRANSPORTATION

IL RTE 58 (GOLF RD) AT WOLF RD
PLAT OF HIGHWAY (SHEET 3 OF 6)
SCALE: SHEET 3 OF 6 SHEETS STA. TO STA.

F.A.P. RTE.	SECTION	COUNTY	TOTAL SHEETS	SHEET NO.
339	583-R	COOK	186	106
		CONTRACT NO. 62B16		
		ILLINOIS FED. AID PROJECT		

PART OF THE SE 1/4 OF SECTION 7, TWP. 41 N., R. 12 E. OF THE 3RD. P.M., IN COOK COUNTY, ILLINOIS.

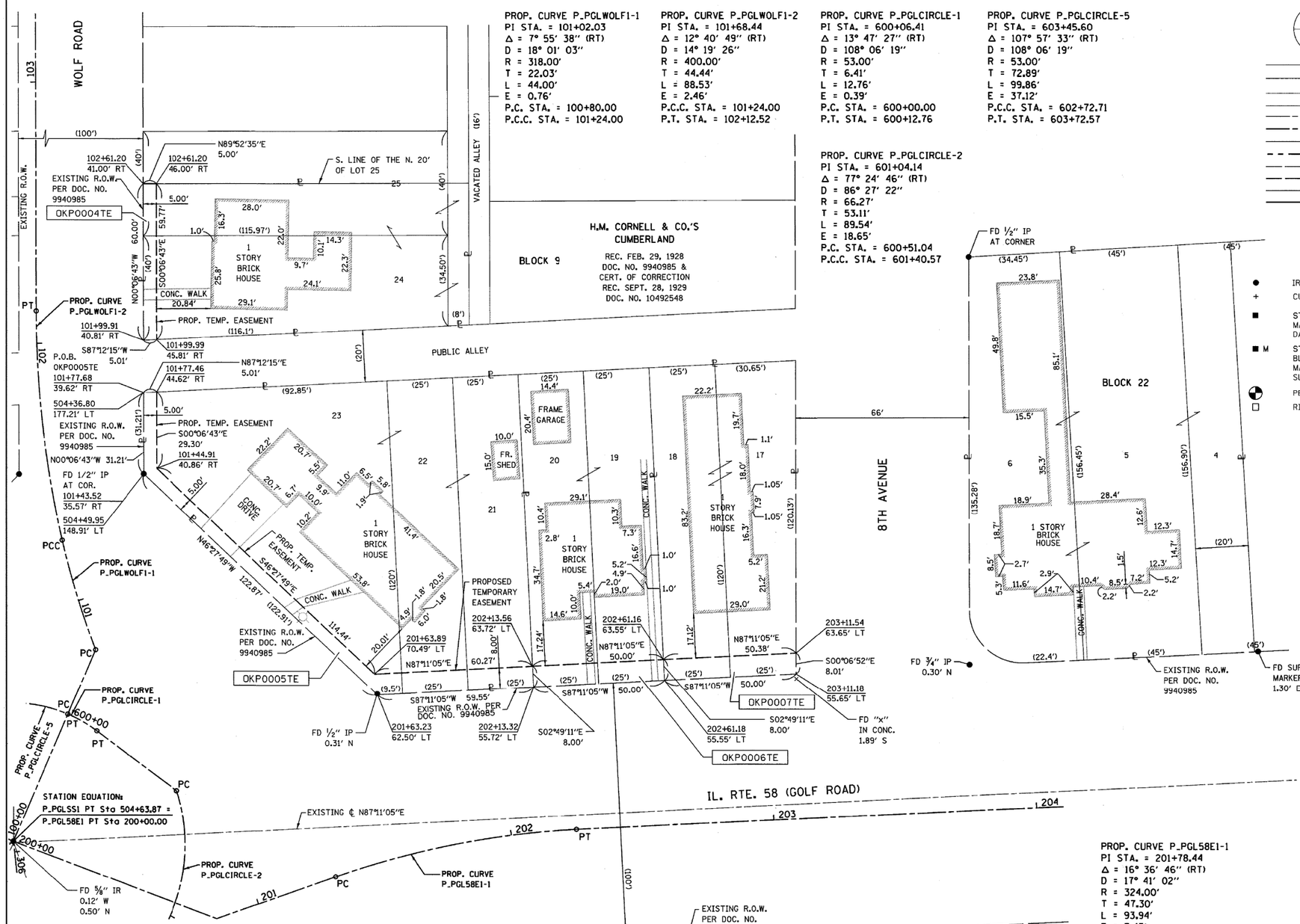

PROP. CURVE P_PGLWOLF1-1
PI STA. = 101+02.03
Δ = 7° 55' 38" (RT)
D = 18° 01' 03"
R = 318.00'
T = 22.03'
L = 44.00'
E = 0.76'
P.C. STA. = 100+80.00
P.C.C. STA. = 101+24.00

PROP. CURVE P_PGLWOLF1-2
PI STA. = 101+68.44
Δ = 12° 40' 49" (RT)
D = 14° 19' 26"
R = 400.00'
T = 44.44'
L = 88.53'
E = 2.46'
P.C.C. STA. = 101+24.00
P.T. STA. = 102+12.52

PROP. CURVE P_PGLCIRCLE-1
PI STA. = 600+06.41
Δ = 13° 47' 27" (RT)
D = 108° 06' 19"
R = 53.00'
T = 6.41'
L = 12.76'
E = 0.39'
P.C. STA. = 600+00.00
P.T. STA. = 600+12.76

PROP. CURVE P_PGLCIRCLE-5
PI STA. = 603+45.60
Δ = 107° 57' 33" (RT)
D = 108° 06' 19"
R = 53.00'
T = 72.89'
L = 99.86'
E = 37.12'
P.C.C. STA. = 602+72.71
P.T. STA. = 603+72.57

PROP. CURVE P_PGLCIRCLE-2
PI STA. = 601+04.14
Δ = 77° 24' 46" (RT)
D = 86° 27' 22"
R = 66.27'
T = 53.11'
L = 89.54'
E = 18.65'
P.C. STA. = 600+51.04
P.C.C. STA. = 601+40.57

PROP. CURVE P_PGL58E1-1
PI STA. = 201+78.44
Δ = 16° 36' 46" (RT)
D = 17° 41' 02"
R = 324.00'
T = 47.30'
L = 93.94'
E = 3.43'
P.C. STA. = 201+31.13
P.T. STA. = 202+25.08

LEGEND

SECTION CORNER

QUARTER SECTION CORNER

SECTION / QUARTER SECTION LINE
PLATTED LOT LINES
PROPERTY (DEED) LINE
APL — APPARENT PROPERTY LINE
EXISTING CENTERLINE
PROPOSED CENTERLINE
EXISTING RIGHT OF WAY LINE
PROPOSED RIGHT OF WAY LINE
EXISTING EASEMENT
PROPOSED EASEMENT
AC — EXISTING ACCESS CONTROL LINE
AC — PROPOSED ACCESS CONTROL LINE
129.32' MEASURED DIMENSION
129.32' (COMP) COMPUTED DIMENSION
(129.32') RECORDED DIMENSION
EXISTING BUILDING

N

GRAPHIC SCALE FEET
0 20'
SCALE: 1"= 20'

● IRON PIPE OR ROD FOUND
⊕ 'MAG' NAIL SET
+ CUT CROSS FOUND OR SET
○ 5 / 8" REBAR SET

■ STAKING OF PROPOSED RIGHT OF WAY. SET DIVISION OF HIGHWAYS SURVEY MARKER TO MONUMENT THE POSITION SHOWN. IDENTIFIED BY INSCRIPTION DATA AND SURVEYORS REGISTRATION NUMBER.

■ M STAKING OF PROPOSED RIGHT OF WAY IN CULTIVATED AREAS. BURIED 5/8 INCH METAL ROD 20 INCHES BELOW GROUND TO MARK FUTURE SURVEY MARKER POSITION IDENTIFIED BY COLORED PLASTIC CAP BEARING SURVEYORS REGISTRATION NUMBER.

PERMANENT SURVEY MARKER, I.D.O.T. STANDARD 2135 (TO BE SET BY OTHERS)

RIGHT OF WAY STAKING PROPOSED TO BE SET

REJENA H. LYON
3302
PROFESSIONAL LAND SURVEYOR
STATE OF ILLINOIS
ELGIN, ILLINOIS

STATE OF ILLINOIS)
)SS
COUNTY OF KANE)

THIS IS TO CERTIFY THAT I, REJENA LYON, AN ILLINOIS PROFESSIONAL LAND SURVEYOR, HAVE SURVEYED THE PLAT OF HIGHWAYS SHOWN HEREON IN SECTIONS 7, TOWNSHIP 41 NORTH, RANGE 12 EAST OF THE THIRD PRINCIPAL MERIDIAN, COOK COUNTY, THAT THE SURVEY IS TRUE AND COMPLETE AS SHOWN TO THE BEST OF MY KNOWLEDGE AND BELIEF, THAT THE PLAT CORRECTLY REPRESENTS SAID SURVEY, THAT ALL MONUMENTS FOUND AND ESTABLISHED ARE OF PERMANENT QUALITY AND OCCUPY THE POSITIONS SHOWN THEREON AND THAT THE MONUMENTS ARE SUFFICIENT TO ENABLE THE SURVEY TO BE RETRACED, MADE FOR THE DEPARTMENT OF TRANSPORTATION, STATE OF ILLINOIS.

DATED AT Elgin, ILLINOIS THIS 25th DAY OF October 20 17 A.D.

Rejena H. Lyon

ILLINOIS PROFESSIONAL LAND SURVEYOR NO. 3302
LICENSE EXPIRATION DATE: NOV. 30, 2018

THIS PROFESSIONAL SERVICE CONFORMS TO THE CURRENT ILLINOIS MINIMUM STANDARDS FOR A BOUNDARY SURVEY, FOR THAT PART SHOWN AS PROPOSED RIGHT-OF-WAY.

FIELD WORK COMPLETED 9/8/2014.

HAMPTON, LENZINI AND RENWICK, INC.
CIVIL ENGINEERS- STRUCTURAL ENGINEERS- LAND SURVEYORS
380 SHEPARD DRIVE
ELGIN, ILLINOIS 60123
847.697.6700 www.hlrengineering.com
184.000959
ILLINOIS PROFESSIONAL DESIGN FIRM LS / PE / SE CORPORATION
JOB: 14.0117.230

PARCEL NUMBER	TOTAL HOLDING	AREA TAKEN	AREA PREVIOUSLY USED	REMAINING AREA	EASEMENT AREA	PIN
OKP0004TE	0.163 Ac±	NA	NA	0.163 Ac±	0.007 Ac (299 SF)±	09-07-411-058
OKP0005TE	0.311 Ac±	NA	NA	0.311 Ac±	0.028 Ac±	09-07-411-035 09-07-411-034 09-07-411-033
OKP0006TE	0.138 Ac±	NA	NA	0.138 Ac±	0.009 Ac (400 SF)±	09-07-411-036 09-07-411-037
OKP0007TE	0.146 Ac±	NA	NA	0.146 Ac±	0.009 Ac (402 SF)±	09-07-411-039 09-07-411-038

ALL DIMENSIONS ARE MEASURED UNLESS OTHERWISE SPECIFIED.
BEARINGS AND DISTANCES SHOWN HEREON REFERENCE THE ILLINOIS STATE PLANE COORDINATE SYSTEM, EAST ZONE, NORTH AMERICAN DATUM OF 1983 (2007 ADJUSTMENT) 'GRID'.
ALL MEASURED AND CALCULATED DISTANCES ARE 'GRID' NOT 'GROUND'. TO OBTAIN GROUND DISTANCES, DIVIDE GRID DISTANCES SHOWN BY THE COMBINATION FACTOR OF 0.99996426.
AREAS SHOWN ON THIS PLAT ARE GROUND.
COORDINATES ARE ILLINOIS STATE PLANE COORDINATES, EAST ZONE NAD 83 (2007 ADJUSTMENT).

REVISION DATE: 10/17/17 REVISION MADE BY: RHL DELETED PARCEL OKP0008TE
REVISION DATE: 04/21/16 REVISION MADE BY: RHL CORRECTED AREA OF PARCEL OKP0004

IDOT USE ONLY

PLAT OF HIGHWAYS
STATE OF ILLINOIS
DEPARTMENT OF TRANSPORTATION
IL 58

LIMITS: AT WOLF ROAD COUNTY: COOK
SECTION: JOB NO.: R-90-007-14
STA. 90+00 TO STA. 97+00
SCALE: 1" = 20' SHEET 4 OF 6 SHEETS

BUREAU OF LAND ACQUISITION
201 WEST CENTER COURT
SCHAUMBURG, ILLINOIS 60196

P:\1501-630 W07 Cumberland-Circle\CADD Sheets\D162B16-sht-203-couplet-4.dgn

HBM ENGINEERING GROUP, LLC

USER NAME = Kendrabant	DESIGNED -	REVISED - 12/01/2017
	DRAWN -	REVISED -
PLOT SCALE = 2.0000 ' / in.	CHECKED -	REVISED -
PLOT DATE = 12/1/2017	DATE - 10/17/2017	REVISED -

STATE OF ILLINOIS
DEPARTMENT OF TRANSPORTATION

IL RTE 58 (GOLF RD) AT WOLF RD
PLAT OF HIGHWAY (SHEET 4 OF 6)

SCALE: SHEET 4 OF 6 SHEETS STA. TO STA.

F.A.P. RTE.	SECTION	COUNTY	TOTAL SHEETS	SHEET NO.
339	583-R	COOK	186	107

CONTRACT NO. 62B16
ILLINOIS FED. AID PROJECT

PART OF THE SE 1/4 OF SECTION 7, TWP. 41 N., R. 12 E. OF THE 3RD. P.M., IN COOK COUNTY, ILLINOIS.

STATE OF ILLINOIS)
)SS
COUNTY OF KANE)

THIS IS TO CERTIFY THAT I, REJENA LYON, AN ILLINOIS PROFESSIONAL LAND SURVEYOR, HAVE SURVEYED THE PLAT OF HIGHWAYS SHOWN HEREON IN SECTIONS 7, TOWNSHIP 41 NORTH, RANGE 12 EAST OF THE THIRD PRINCIPAL MERIDIAN, COOK COUNTY, THAT THE SURVEY IS TRUE AND COMPLETE AS SHOWN TO THE BEST OF MY KNOWLEDGE AND BELIEF, THAT THE PLAT CORRECTLY REPRESENTS SAID SURVEY, THAT ALL MONUMENTS FOUND AND ESTABLISHED ARE OF PERMANENT QUALITY AND OCCUPY THE POSITIONS SHOWN THEREON AND THAT THE MONUMENTS ARE SUFFICIENT TO ENABLE THE SURVEY TO BE RETRACED, MADE FOR THE DEPARTMENT OF TRANSPORTATION, STATE OF ILLINOIS.

REJENA H. LYON
3302
PROFESSIONAL LAND SURVEYOR STATE OF ILLINOIS
ELGIN, ILLINOIS

DATED AT Elgin, ILLINOIS THIS 25th DAY OF October 2017 A.D.

Rejena H. Lyon

ILLINOIS PROFESSIONAL LAND SURVEYOR NO. 3302
LICENSE EXPIRATION DATE: NOV. 30, 2018

THIS PROFESSIONAL SERVICE CONFORMS TO THE CURRENT ILLINOIS MINIMUM STANDARDS FOR A BOUNDARY SURVEY, FOR THAT PART SHOWN AS PROPOSED RIGHT-OF-WAY.

FIELD WORK COMPLETED 9/8/2014.

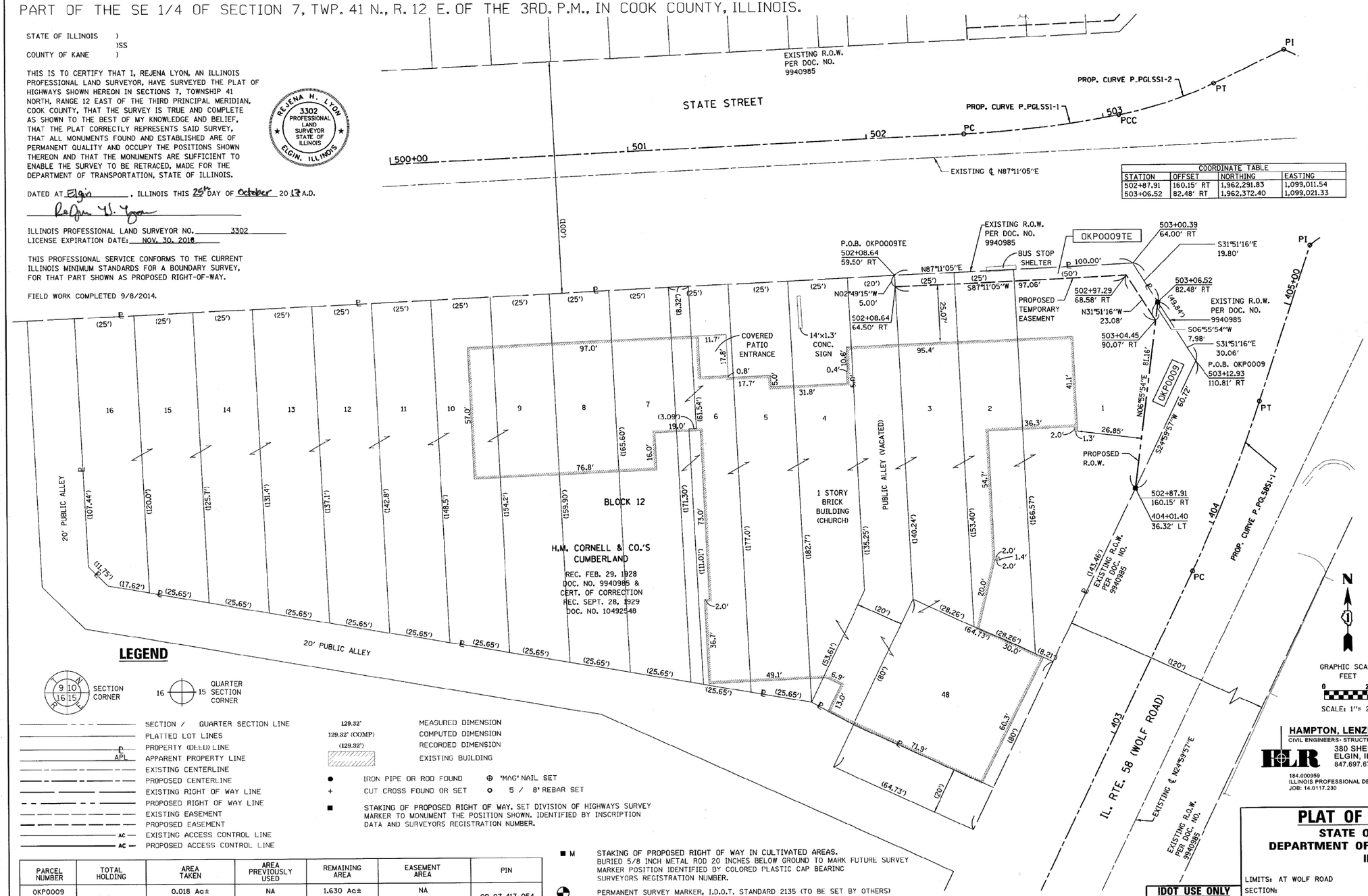

COORDINATE TABLE			
STATION	OFFSET	NORTHING	EASTING
502+87.91	160.15' RT	1,962,291.83	1,099,011.54
503+06.52	82.48' RT	1,962,372.40	1,099,021.33

PROP. CURVE P_PGLSS1-1
PI STA. = 502+73.90
Δ = 8° 21' 00" (LT)
D = 12° 43' 57"
R = 450.00'
T = 32.85'
L = 65.58'
E = 1.20'
P.C. STA. = 502+41.06
P.C.C. STA. = 503+06.64

PROP. CURVE P_PGLSS1-2
PI STA. = 503+27.96
Δ = 14° 33' 06" (LT)
D = 34° 18' 32"
R = 167.00'
T = 21.32'
L = 42.41'
E = 1.36'
P.C.C. STA. = 503+06.64
P.T. STA. = 503+49.05

PROP. CURVE P_PGL58S1-1
PI STA. = 404+16.94
Δ = 7° 15' 35" (LT)
D = 9° 13' 35"
R = 621.00'
T = 39.39'
L = 78.68'
E = 1.25'
P.C. STA. = 403+77.55
P.T. STA. = 404+56.23

PROP. CURVE P_PGLCIRCLE-4
PI STA. = 602+47.49
Δ = 43° 29' 25" (RT)
D = 81° 51' 04"
R = 70.00'
T = 27.92'
L = 53.13'
E = 5.36'
P.C.C. STA. = 602+19.57
P.C.C. STA. = 602+72.71

PROP. CURVE P_PGLCIRCLE-5
PI STA. = 603+45.60
Δ = 107° 57' 33" (RT)
D = 108° 06' 19"
R = 53.00'
T = 72.89'
L = 99.86'
E = 37.12'
P.C.C. STA. = 602+72.71
P.T. STA. = 603+72.57

LEGEND

SECTION CORNER — QUARTER SECTION CORNER

	SECTION / QUARTER SECTION LINE	129.32'	MEASURED DIMENSION
	PLATTED LOT LINES	129.32' (COMP)	COMPUTED DIMENSION
P	PROPERTY (DEED) LINE	(129.32')	RECORDED DIMENSION
APL	APPARENT PROPERTY LINE		EXISTING BUILDING
	EXISTING CENTERLINE		
	PROPOSED CENTERLINE		
	EXISTING RIGHT OF WAY LINE		
	PROPOSED RIGHT OF WAY LINE		
	EXISTING EASEMENT		
	PROPOSED EASEMENT		
AC	EXISTING ACCESS CONTROL LINE		
AC	PROPOSED ACCESS CONTROL LINE		

● IRON PIPE OR ROD FOUND
⊕ "MAG" NAIL SET
+ CUT CROSS FOUND OR SET
○ 5 / 8" REBAR SET
■ STAKING OF PROPOSED RIGHT OF WAY. SET DIVISION OF HIGHWAYS SURVEY MARKER TO MONUMENT THE POSITION SHOWN. IDENTIFIED BY INSCRIPTION DATA AND SURVEYORS REGISTRATION NUMBER.

■ M STAKING OF PROPOSED RIGHT OF WAY IN CULTIVATED AREAS. BURIED 5/8 INCH METAL ROD 20 INCHES BELOW GROUND TO MARK FUTURE SURVEY MARKER POSITION IDENTIFIED BY COLORED PLASTIC CAP BEARING SURVEYORS REGISTRATION NUMBER.

PERMANENT SURVEY MARKER, I.D.O.T. STANDARD 2135 (TO BE SET BY OTHERS)

RIGHT OF WAY STAKING PROPOSED TO BE SET

PARCEL NUMBER	TOTAL HOLDING	AREA TAKEN	AREA PREVIOUSLY USED	REMAINING AREA	EASEMENT AREA	PIN
OKP0009	1.648 Ac±	0.018 Ac±	NA	1.630 Ac±	NA	09-07-417-054
OKP0009TE		NA	NA	NA	0.014 Ac±	

ALL DIMENSIONS ARE MEASURED UNLESS OTHERWISE SPECIFIED.
BEARINGS AND DISTANCES SHOWN HEREON REFERENCE THE ILLINOIS STATE PLANE COORDINATE SYSTEM, EAST ZONE, NORTH AMERICAN DATUM OF 1983 (2007 ADJUSTMENT) "GRID".
ALL MEASURED AND CALCULATED DISTANCES ARE "GRID" NOT "GROUND". TO OBTAIN GROUND DISTANCES, DIVIDE GRID DISTANCES SHOWN BY THE COMBINATION FACTOR OF 0.99996426.
AREAS SHOWN ON THIS PLAT ARE GROUND.
COORDINATES ARE ILLINOIS STATE PLANE COORDINATES, EAST ZONE NAD 83 (2007 ADJUSTMENT).

REVISION DATE: / / REVISION MADE BY:

HAMPTON, LENZINI AND RENWICK, INC.
CIVIL ENGINEERS · STRUCTURAL ENGINEERS · LAND SURVEYORS
380 SHEPARD DRIVE
ELGIN, ILLINOIS 60123
847.697.6700 www.hlrengineering.com
184.000959
ILLINOIS PROFESSIONAL DESIGN FIRM LS / PE / SE CORPORATION
JOB: 14.0117.230

PLAT OF HIGHWAYS
STATE OF ILLINOIS
DEPARTMENT OF TRANSPORTATION
IL 58

LIMITS: AT WOLF ROAD — COUNTY: COOK
SECTION: — JOB NO.: R-90-007-14
STA. 500+00 TO STA. 504+00
SCALE: 1" = 20' — SHEET 5 OF 6 SHEETS

IDOT USE ONLY

BUREAU OF LAND ACQUISITION
201 WEST CENTER COURT
SCHAUMBURG, ILLINOIS 60196

PART OF THE SE 1/4 OF SECTION 7, TWP. 41 N., R. 12 E. OF THE 3RD. P.M., IN COOK COUNTY, ILLINOIS.

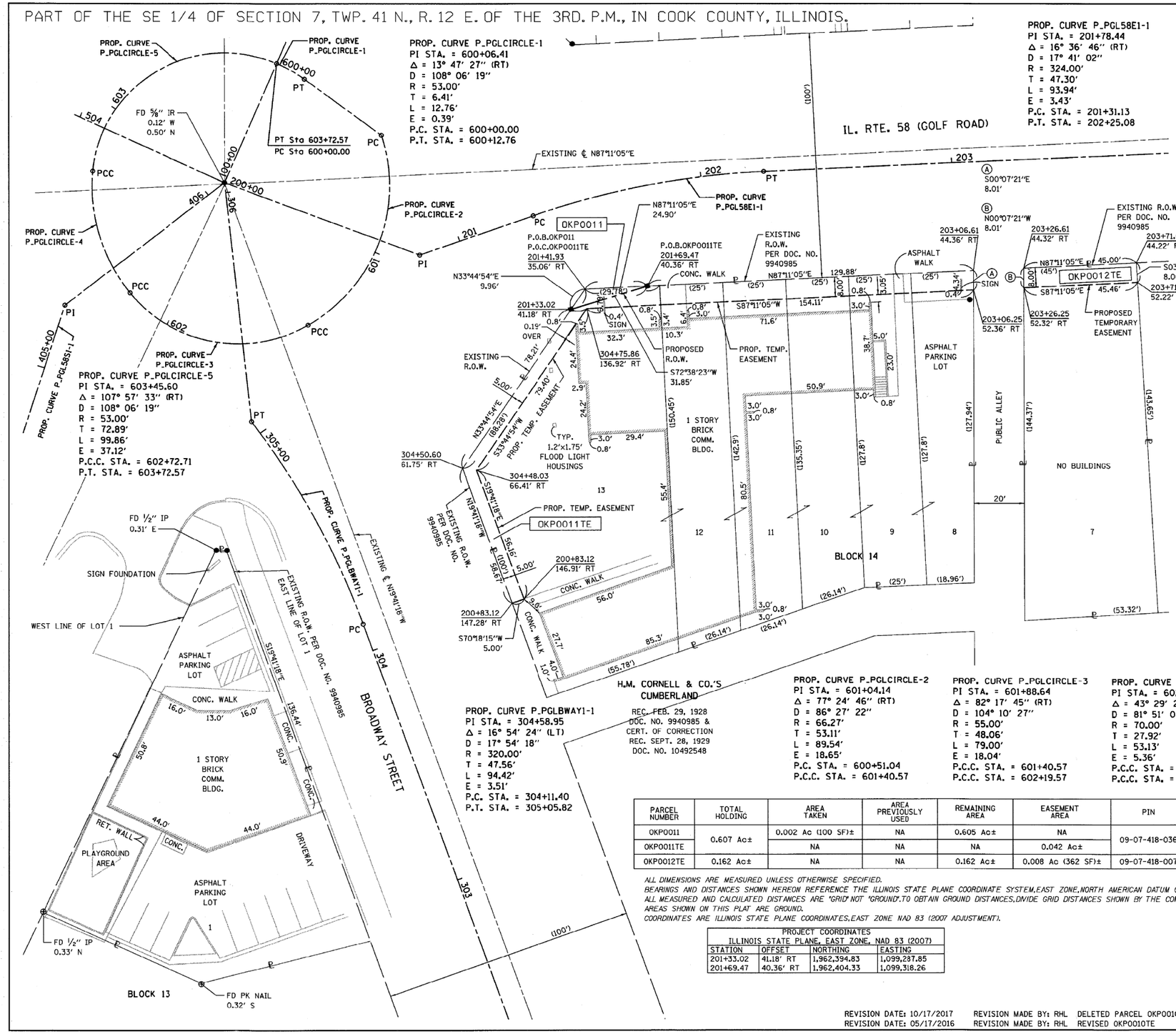

PARCEL NUMBER	TOTAL HOLDING	AREA TAKEN	AREA PREVIOUSLY USED	REMAINING AREA	EASEMENT AREA	PIN
0KP0011	0.607 Ac±	0.002 Ac (100 SF)±	NA	0.605 Ac±	NA	09-07-418-036
0KP0011TE		NA	NA	NA	0.042 Ac±	
0KP0012TE	0.162 Ac±	NA	NA	0.162 Ac±	0.008 Ac (362 SF)±	09-07-418-007

ALL DIMENSIONS ARE MEASURED UNLESS OTHERWISE SPECIFIED.
BEARINGS AND DISTANCES SHOWN HEREON REFERENCE THE ILLINOIS STATE PLANE COORDINATE SYSTEM, EAST ZONE, NORTH AMERICAN DATUM OF 1983 (2007 ADJUSTMENT) "GRID".
ALL MEASURED AND CALCULATED DISTANCES ARE "GRID" NOT "GROUND". TO OBTAIN GROUND DISTANCES, DIVIDE GRID DISTANCES SHOWN BY THE COMBINATION FACTOR OF 0.99996426.
AREAS SHOWN ON THIS PLAT ARE GROUND.
COORDINATES ARE ILLINOIS STATE PLANE COORDINATES, EAST ZONE NAD 83 (2007 ADJUSTMENT).

PROJECT COORDINATES ILLINOIS STATE PLANE, EAST ZONE, NAD 83 (2007)			
STATION	OFFSET	NORTHING	EASTING
201+33.02	41.18' RT	1,962,394.83	1,099,287.85
201+69.47	40.36' RT	1,962,404.33	1,099,318.26

LEGEND

SECTION CORNER
QUARTER SECTION CORNER

SECTION / QUARTER SECTION LINE
PLATTED LOT LINES
PROPERTY (DEED) LINE
APPARENT PROPERTY LINE
EXISTING CENTERLINE
PROPOSED CENTERLINE
EXISTING RIGHT OF WAY LINE
PROPOSED RIGHT OF WAY LINE
EXISTING EASEMENT
PROPOSED EASEMENT
EXISTING ACCESS CONTROL LINE
PROPOSED ACCESS CONTROL LINE
MEASURED DIMENSION
COMPUTED DIMENSION
RECORDED DIMENSION
EXISTING BUILDING

N

GRAPHIC SCALE
FEET
0 20'
SCALE: 1"= 20'

IRON PIPE OR ROD FOUND
CUT CROSS FOUND OR SET
"MAG" NAIL SET
5 / 8" REBAR SET

STAKING OF PROPOSED RIGHT OF WAY. SET DIVISION OF HIGHWAYS SURVEY MARKER TO MONUMENT THE POSITION SHOWN. IDENTIFIED BY INSCRIPTION DATA AND SURVEYORS REGISTRATION NUMBER.

STAKING OF PROPOSED RIGHT OF WAY IN CULTIVATED AREAS. BURIED 5/8 INCH METAL ROD 20 INCHES BELOW GROUND TO MARK FUTURE SURVEY MARKER POSITION IDENTIFIED BY COLORED PLASTIC CAP BEARING SURVEYORS REGISTRATION NUMBER.

PERMANENT SURVEY MARKER, I.D.O.T. STANDARD 2135 (TO BE SET BY OTHERS)

RIGHT OF WAY STAKING PROPOSED TO BE SET

REJENA H. LYON
3302
PROFESSIONAL LAND SURVEYOR
STATE OF ILLINOIS
ELGIN, ILLINOIS

STATE OF ILLINOIS)
)SS
COUNTY OF KANE)

THIS IS TO CERTIFY THAT I, REJENA LYON, AN ILLINOIS PROFESSIONAL LAND SURVEYOR, HAVE SURVEYED THE PLAT OF HIGHWAYS SHOWN HEREON IN SECTIONS 7, TOWNSHIP 41 NORTH, RANGE 12 EAST OF THE THIRD PRINCIPAL MERIDIAN, COOK COUNTY, THAT THE SURVEY IS TRUE AND COMPLETE AS SHOWN TO THE BEST OF MY KNOWLEDGE AND BELIEF, THAT THE PLAT CORRECTLY REPRESENTS SAID SURVEY, THAT ALL MONUMENTS FOUND AND ESTABLISHED ARE OF PERMANENT QUALITY AND OCCUPY THE POSITIONS SHOWN THEREON AND THAT THE MONUMENTS ARE SUFFICIENT TO ENABLE THE SURVEY TO BE RETRACED, MADE FOR THE DEPARTMENT OF TRANSPORTATION, STATE OF ILLINOIS.

DATED AT Elgin, ILLINOIS THIS 25th DAY OF October 20 17 A.D.

Rejena H. Lyon

ILLINOIS PROFESSIONAL LAND SURVEYOR NO. 3302
LICENSE EXPIRATION DATE: NOV. 30, 2018

THIS PROFESSIONAL SERVICE CONFORMS TO THE CURRENT ILLINOIS MINIMUM STANDARDS FOR A BOUNDARY SURVEY, FOR THAT PART SHOWN AS PROPOSED RIGHT-OF-WAY.

FIELD WORK COMPLETED 9/8/2014.
UPDATED PARCEL 10 5/17/2016.

HAMPTON, LENZINI AND RENWICK, INC.
CIVIL ENGINEERS• STRUCTURAL ENGINEERS• LAND SURVEYORS
380 SHEPARD DRIVE
ELGIN, ILLINOIS 60123
847.697.6700 www.hlrengineering.com
184.000959
ILLINOIS PROFESSIONAL DESIGN FIRM LS / PE / SE CORPORATION
JOB: 14.0117.230

REVISION DATE: 10/17/2017 REVISION MADE BY: RHL DELETED PARCEL OKP0010TE
REVISION DATE: 05/17/2016 REVISION MADE BY: RHL REVISED OKP0010TE

IDOT USE ONLY

PLAT OF HIGHWAYS

STATE OF ILLINOIS
DEPARTMENT OF TRANSPORTATION
IL 58

LIMITS: AT WOLF ROAD COUNTY: COOK
SECTION: JOB NO.: R-90-007-14
STA. 200+00 TO STA. 203+00
SCALE: 1" = 20' SHEET 6 OF 6 SHEETS

BUREAU OF LAND ACQUISITION
201 WEST CENTER COURT
SCHAUMBURG, ILLINOIS 60196

P:\1581-638 W07 Cumberland\Circle\CADD_Sheets\D162B16-sht-205-roughs.dgn

HBM ENGINEERING GROUP, LLC

USER NAME = Kendrabant	DESIGNED -	REVISED - 12/01/2017	
	DRAWN -	REVISED -	
PLOT SCALE = 2.0000 ' / in.	CHECKED -	REVISED -	
PLOT DATE = 12/1/2017	DATE - 10/17/2017	REVISED -	

STATE OF ILLINOIS
DEPARTMENT OF TRANSPORTATION

IL RTE 58 (GOLF RD) AT WOLF RD
PLAT OF HIGHWAY (SHEET 6 OF 6)

SCALE: SHEET 6 OF 6 SHEETS STA. TO STA.

F.A.P. RTE.	SECTION	COUNTY	TOTAL SHEETS	SHEET NO.
339	583-R	COOK	186	109
		CONTRACT NO. 62B16		
		ILLINOIS FED. AID PROJECT		

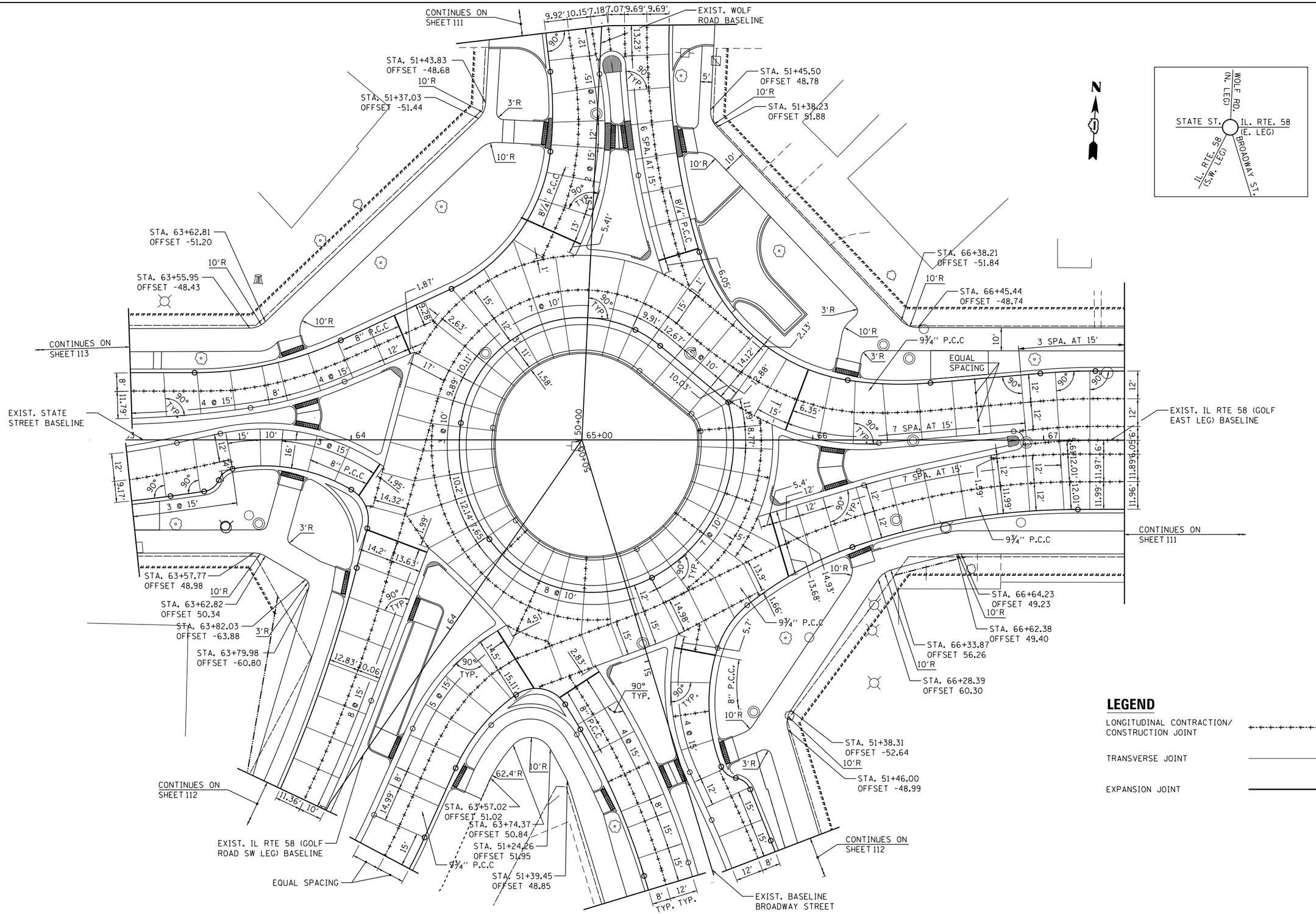

P:\1501-638 W07 CumberlandCircle\CADD-Sheets\D162B16-sht-211-jointing04-RoundAbout.dgn

HBM ENGINEERING GROUP, LLC

USER NAME = Ken.drabant	DESIGNED - KJD	REVISED - 12/01/2017	
	DRAWN - KJD	REVISED -	
PLOT SCALE = 40.0000 ' / in.	CHECKED - JMG	REVISED -	
PLOT DATE = 12/1/2017	DATE - 10/17/2017	REVISED -	

STATE OF ILLINOIS
DEPARTMENT OF TRANSPORTATION

ROADWAY JOINTING PLAN
ROUNDABOUT

SCALE: | SHEET 1 OF 4 SHEETS | STA. TO STA.

F.A.P. RTE.	SECTION	COUNTY	TOTAL SHEETS	SHEET NO.
339	583-R	COOK	186	110

CONTRACT NO. 62B16

ILLINOIS FED. AID PROJECT

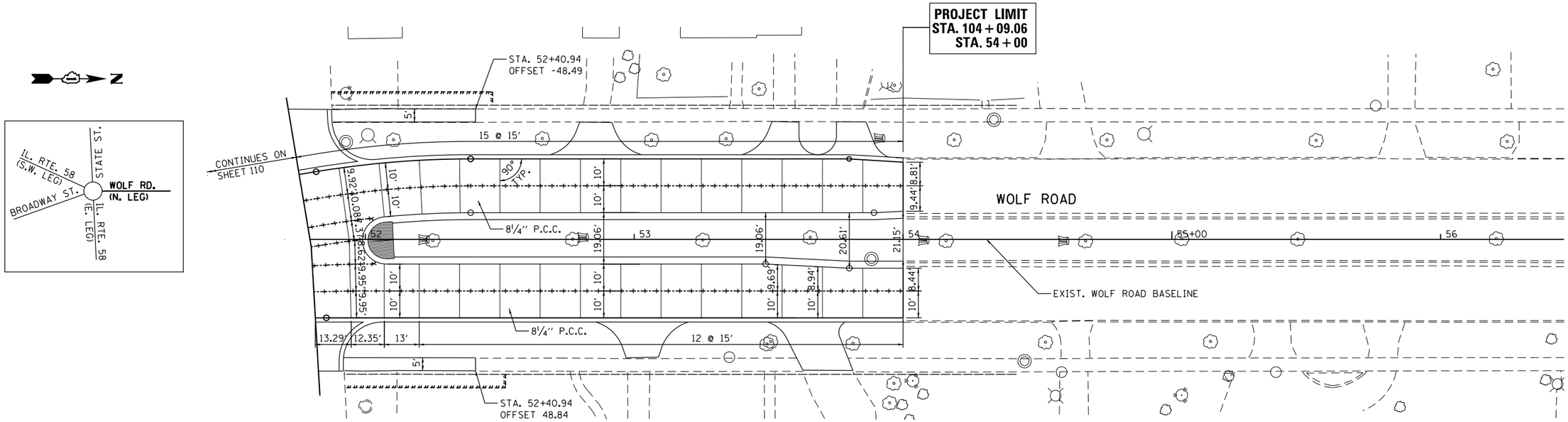

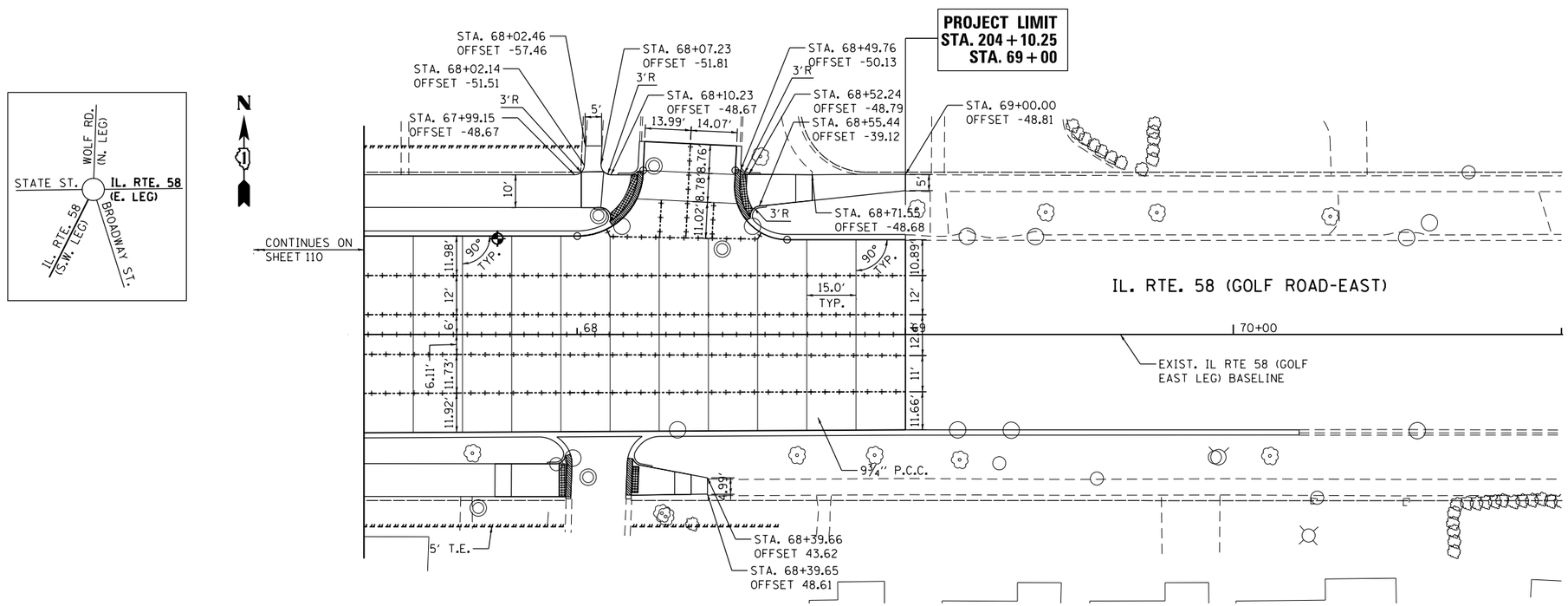

LEGEND

LONGITUDINAL CONTRACTION/ CONSTRUCTION JOINT

TRANSVERSE JOINT

EXPANSION JOINT

P:\1581-638 W07 Cumberland-Circle\CADD_Sheets\D162B16-sht-212-jointing01_Wolf&GolfEast.dgn

HBM ENGINEERING GROUP, LLC

USER NAME = Kendrabant	DESIGNED - KJD	REVISED - 12/01/2017	
	DRAWN - KJD	REVISED -	
PLOT SCALE = 40.0000 ' / in.	CHECKED - JMG	REVISED -	
PLOT DATE = 12/1/2017	DATE - 10/17/2017	REVISED -	

STATE OF ILLINOIS
DEPARTMENT OF TRANSPORTATION

ROADWAY JOINTING PLAN
WOLF RD. & GOLF RD. (EAST)

SCALE: | SHEET 2 OF 4 SHEETS | STA. TO STA.

F.A.P. RTE.	SECTION	COUNTY	TOTAL SHEETS	SHEET NO.
339	583-R	COOK	186	111
		CONTRACT NO. 62B16		
		ILLINOIS FED. AID PROJECT		

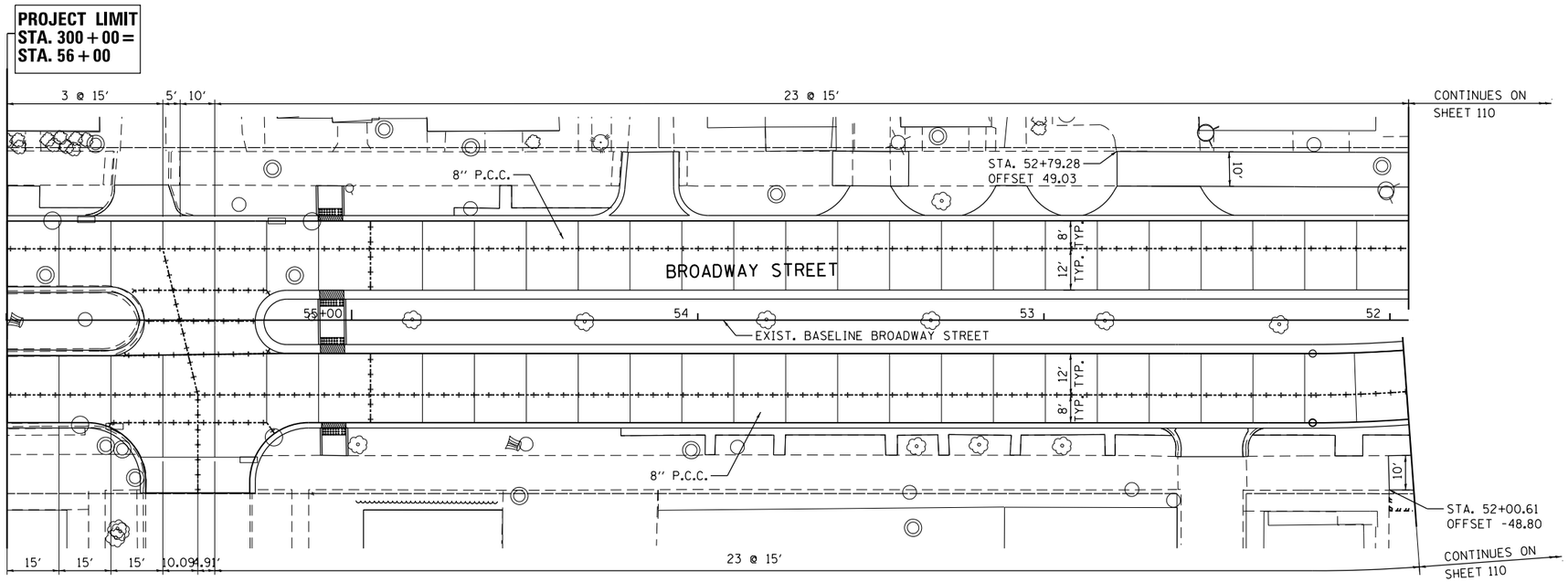

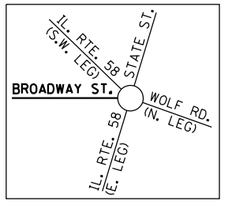

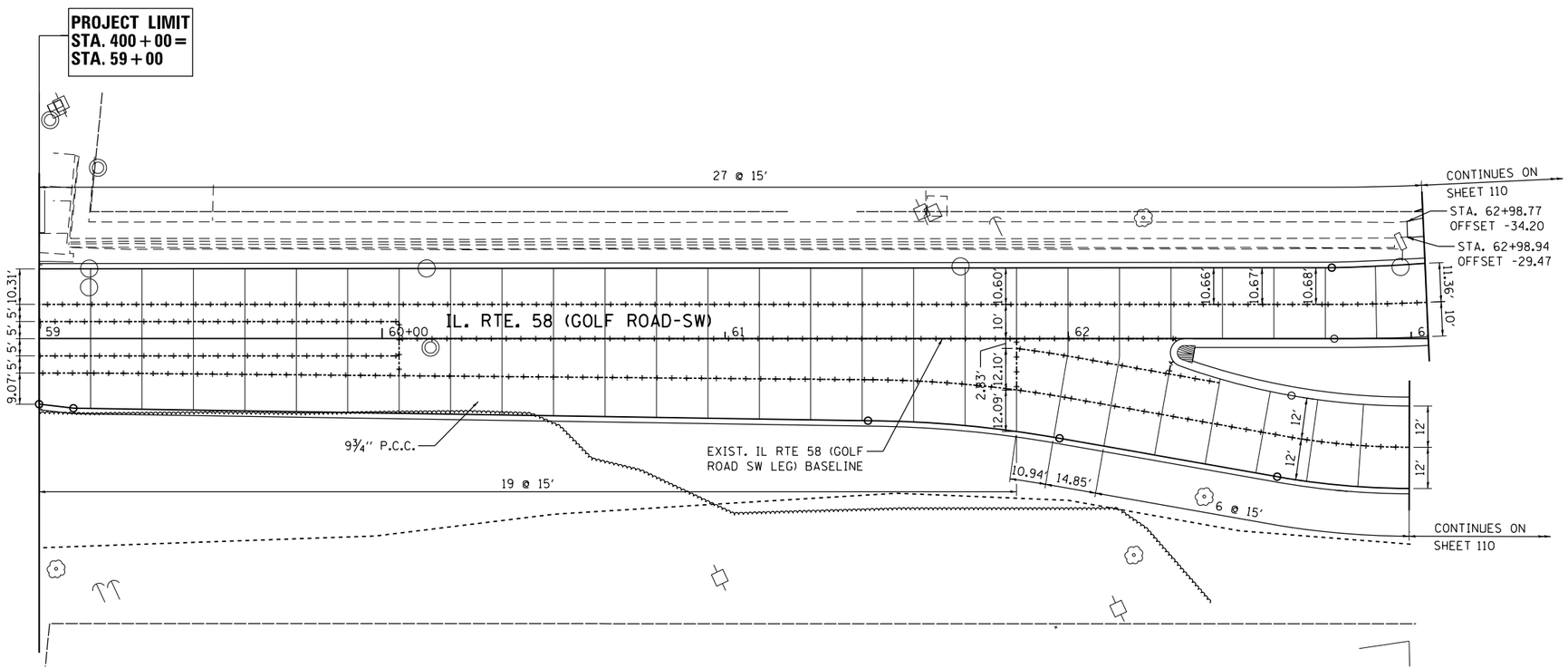

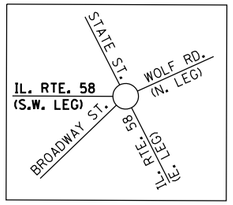

LEGEND

LONGITUDINAL CONTRACTION/ CONSTRUCTION JOINT

TRANSVERSE JOINT

EXPANSION JOINT

P:\1501-630_W07_Cumberland&Jurcile\CADD_Sheets\D162B16-sht-213-roadway02-Broadway&Golf-SW.dgn

HBM ENGINEERING GROUP, LLC

USER NAME = Kendrabant	DESIGNED - KJD	REVISED - 12/01/2017	
	DRAWN - KJD	REVISED -	
PLOT SCALE = 40.0000 ' / in.	CHECKED - JMG	REVISED -	
PLOT DATE = 12/1/2017	DATE - 10/17/2017	REVISED -	

STATE OF ILLINOIS
DEPARTMENT OF TRANSPORTATION

ROADWAY JOINTING PLAN
BROADWAY ST. & GOLF RD. (WEST)

SCALE: | SHEET 3 OF 4 SHEETS | STA. TO STA.

F.A.P. RTE.	SECTION	COUNTY	TOTAL SHEETS	SHEET NO.
339	583-R	COOK	186	112

CONTRACT NO. 62B16

ILLINOIS FED. AID PROJECT

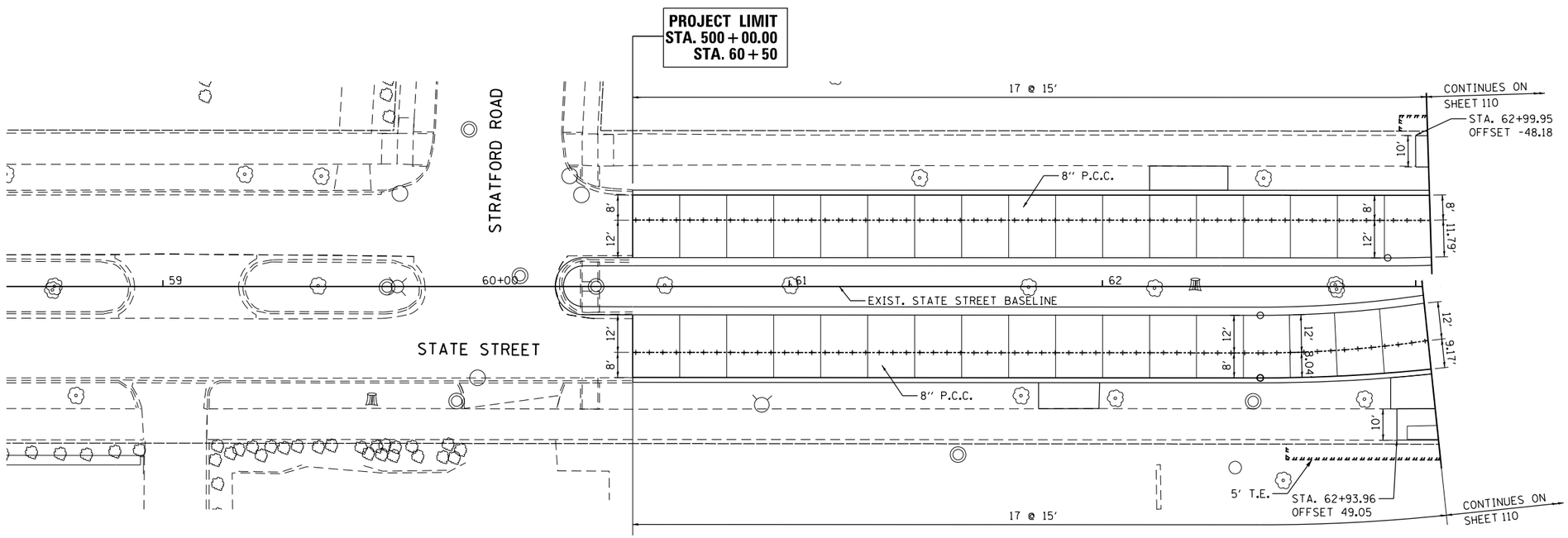

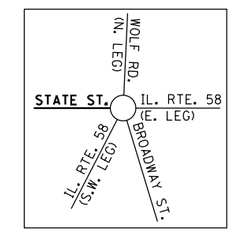

LEGEND

LONGITUDINAL CONTRACTION/ CONSTRUCTION JOINT

TRANSVERSE JOINT

EXPANSION JOINT

P:\1501-630 W07 CumberlandCircle\CADD_Sheets\D162B16-sht-214-jointing03_State.dgn

HBM ENGINEERING GROUP, LLC	USER NAME = Kendrabant	DESIGNED - KJD	REVISED - 12/01/2017	STATE OF ILLINOIS DEPARTMENT OF TRANSPORTATION	ROADWAY JOINTING PLAN STATE ST.	F.A.P. RTE.	SECTION	COUNTY	TOTAL SHEETS / SHEET NO.
		DRAWN - KJD	REVISED -			339	583-R	COOK	186 / 113
	PLOT SCALE = 40.0000 ' / in.	CHECKED - JMG	REVISED -			CONTRACT NO. 62B16			
	PLOT DATE = 12/1/2017	DATE - 10/17/2017	REVISED -		SCALE: SHEET 4 OF 4 SHEETS STA. TO STA.	ILLINOIS FED. AID PROJECT			

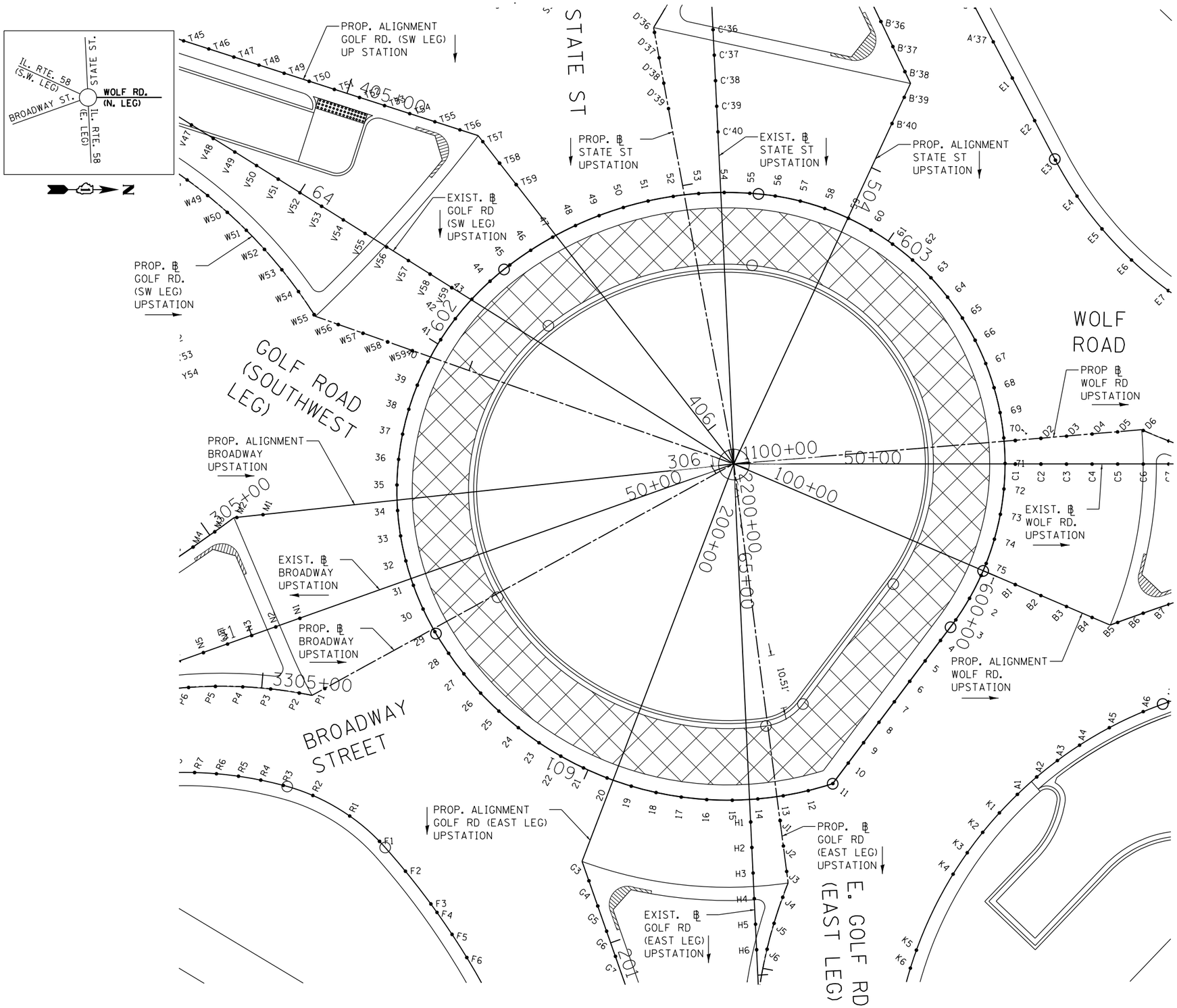
STATE ST
IL. RTE. 58 (S.W. LEG)
STATE ST.
WOLF RD. (N. LEG)
BROADWAY ST.
IL. RTE. 58 (E. LEG)
N
PROP. ALIGNMENT GOLF RD. (SW LEG) UP STATION
PROP. ℄ STATE ST UPSTATION
EXIST. ℄ STATE ST UPSTATION
PROP. ALIGNMENT STATE ST UPSTATION
EXIST. ℄ GOLF RD (SW LEG) UPSTATION
PROP. ℄ GOLF RD. (SW LEG) UPSTATION
GOLF ROAD (SOUTHWEST LEG)
WOLF ROAD
PROP ℄ WOLF RD UPSTATION
EXIST. ℄ WOLF RD. UPSTATION
PROP. ALIGNMENT WOLF RD. UPSTATION
PROP. ALIGNMENT BROADWAY UPSTATION
EXIST. ℄ BROADWAY UPSTATION
PROP. ℄ BROADWAY UPSTATION
BROADWAY STREET
PROP. ALIGNMENT GOLF RD (EAST LEG) UPSTATION
PROP. ℄ GOLF RD (EAST LEG) UPSTATION
EXIST. ℄ GOLF RD (EAST LEG) UPSTATION
E. GOLF RD (EAST LEG)
1100+00
50+00
100+00
200+00
300+00
400+00
500+00
600+00
700+00
800+00
900+00
1000+00
1100+00
1200+00
1300+00
1400+00
1500+00
1600+00
1700+00
1800+00
1900+00
2000+00
2100+00
2200+00
2300+00
2400+00
2500+00
2600+00
2700+00
2800+00
2900+00
3000+00
3100+00
3200+00
3300+00
3400+00
3500+00
3600+00
3700+00
3800+00
3900+00
4000+00

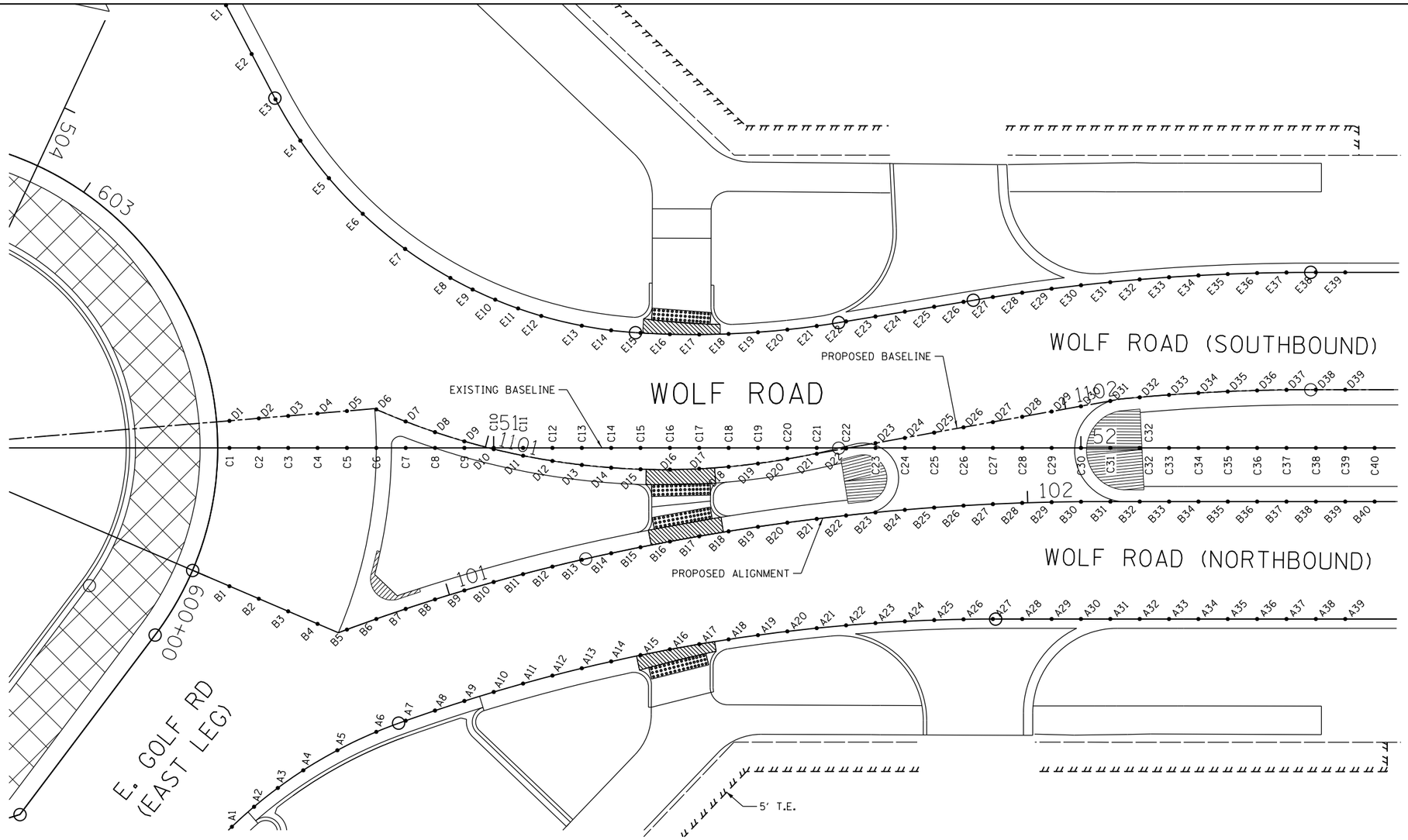

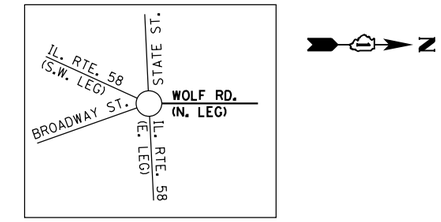

PAVEMENT LAYOUT SCHEDULE

POINT	*STATION	OFFSET	***STATION	ELEVATION
D1	50+55.00	4.61 LT	1100+55.19	N/A
D2	50+60.00	5.03 LT	1100+60.21	N/A
D3	50+65.00	5.45 LT	1100+65.23	N/A
D4	50+70.00	5.87 LT	1100+70.25	N/A
D5	50+75.00	6.29 LT	1100+75.26	N/A
D6	50+80.00	6.56 LT	1100+80.31	649.24
D7	50+85.00	4.50 LT	1100+85.71	649.22
D8	50+90.00	2.69 LT	1100+91.03	649.21
D9	50+95.00	1.13 LT	1100+96.27	649.19
D10	51+00.00	0.21 RT	1101+01.45	649.17
D11	51+05.00	1.32 RT	1101+06.57	649.17
D12	51+10.00	2.22 RT	1101+11.65	649.17
D13	51+15.00	2.90 RT	1101+16.70	649.18
D14	51+20.00	3.37 RT	1101+21.72	649.19
D15	51+25.00	3.64 RT	1101+26.73	649.22
D16	51+30.00	3.70 RT	1101+31.73	649.25
D17	51+35.00	3.56 RT	1101+36.73	649.28
D18	51+40.00	3.21 RT	1101+41.74	649.33
D19	51+45.00	2.65 RT	1101+46.77	649.38
D20	51+50.00	1.88 RT	1101+51.83	649.44
D21	51+55.00	0.99 RT	1101+56.91	649.51
D22	51+60.00	0.09 RT	1101+61.99	649.58
D23	51+65.00	0.81 LT	1101+67.07	649.67
D24	51+70.00	1.71 LT	1101+72.15	649.76
D25	51+75.00	2.61 LT	1101+77.23	649.85
D26	51+80.00	3.51 LT	1101+82.31	649.96
D27	51+85.00	4.40 LT	1101+87.39	650.07
D28	51+90.00	5.30 LT	1101+92.47	650.19
D29	51+95.00	6.20 LT	1101+97.55	650.32
D30	52+00.00	7.10 LT	1102+02.63	650.45
D31	52+05.00	8.00 LT	1102+07.71	650.59
D32	52+10.00	8.63 LT	1102+12.76	650.73
D33	52+15.00	9.03 LT	1102+17.77	650.86
D34	52+20.00	9.36 LT	1102+22.78	651.00
D35	52+25.00	9.61 LT	1102+27.79	651.13
D36	52+30.00	9.79 LT	1102+32.79	651.27
D37	52+35.00	9.89 LT	1102+37.79	651.41
D38	52+40.00	9.91 LT	1102+42.79	651.54
D39	52+45.00	9.91 LT	1102+47.79	651.68

*STATIONS MEASURED ALONG EXISTING BASELINE
**STATIONS MEASURED ALONG PROPOSED ALIGNMENT
***STATIONS MEASURED ALONG PROPOSED BASELINE

PAVEMENT LAYOUT SCHEDULE

POINT	*STATION	OFFSET	**STATION	ELEVATION
B1	50+55.00	23.55 RT	100+59.83	N/A
B2	50+60.00	25.69 RT	100+65.27	N/A
B3	50+65.00	27.83 RT	100+70.71	N/A
B4	50+70.00	29.97 RT	100+76.15	N/A
B5	50+75.00	30.94 RT	100+81.56	649.16
B6	50+80.00	29.14 RT	100+86.87	649.14
B7	50+85.00	27.43 RT	100+92.16	649.12
B8	50+90.00	25.81 RT	100+97.41	649.11
B9	50+95.00	24.28 RT	101+02.64	649.09
B10	51+00.00	22.84 RT	101+07.84	649.09
B11	51+05.00	21.49 RT	101+13.02	649.09
B12	51+10.00	20.23 RT	101+18.18	649.10
B13	51+15.00	19.05 RT	101+23.32	649.12
B14	51+20.00	17.95 RT	101+28.44	649.15
B15	51+25.00	16.91 RT	101+33.54	649.18
B16	51+30.00	15.95 RT	101+38.64	649.22
B17	51+35.00	15.04 RT	101+43.72	649.27
B18	51+40.00	14.21 RT	101+48.79	649.32
B19	51+45.00	13.44 RT	101+53.85	649.39
B20	51+50.00	12.73 RT	101+58.90	649.46

PAVEMENT LAYOUT SCHEDULE

POINT	*STATION	OFFSET	**STATION	ELEVATION
B21	51+55.00	12.09 RT	101+63.94	649.54
B22	51+60.00	11.51 RT	101+68.97	649.62
B23	51+65.00	11.00 RT	101+74.00	649.71
B24	51+70.00	10.54 RT	101+79.02	649.81
B25	51+75.00	10.16 RT	101+84.03	649.92
B26	51+80.00	9.83 RT	101+89.04	650.03
B27	51+85.00	9.57 RT	101+94.05	650.15
B28	51+90.00	9.37 RT	101+99.05	650.28
B29	51+95.00	9.23 RT	102+04.06	650.41
B30	52+00.00	9.16 RT	102+09.06	650.55
B31	52+05.00	9.14 RT	102+14.06	650.69
B32	52+10.00	9.14 RT	102+19.06	650.82
B33	52+15.00	9.14 RT	102+24.06	650.96
B34	52+20.00	9.14 RT	102+29.06	651.09
B35	52+25.00	9.14 RT	102+34.06	651.23
B36	52+30.00	9.14 RT	102+39.06	651.37
B37	52+35.00	9.14 RT	102+44.06	651.50
B38	52+40.00	9.14 RT	102+49.06	651.64
B39	52+45.00	9.14 RT	102+54.06	651.78
B40	52+50.00	9.14 RT	102+59.06	651.91

PAVEMENT LAYOUT SCHEDULE

POINT	*STATION	NORTHING	EASTING
C1	50+55.00	1,962,501.61	1,099,149.47
C2	50+60.00	1,962,506.61	1,099,149.46
C3	50+65.00	1,962,511.61	1,099,149.45
C4	50+70.00	1,962,516.61	1,099,149.44
C5	50+75.00	1,962,521.61	1,099,149.43
C6	50+80.00	1,962,526.61	1,099,149.42
C7	50+85.00	1,962,531.61	1,099,149.41
C8	50+90.00	1,962,536.61	1,099,149.39
C9	50+95.00	1,962,541.61	1,099,149.38
C10	51+00.00	1,962,546.61	1,099,149.37
C11	51+05.00	1,962,551.61	1,099,149.36
C12	51+10.00	1,962,556.61	1,099,149.35
C13	51+15.00	1,962,561.61	1,099,149.34
C14	51+20.00	1,962,566.61	1,099,149.33
C15	51+25.00	1,962,571.61	1,099,149.32
C16	51+30.00	1,962,576.61	1,099,149.31
C17	51+35.00	1,962,581.61	1,099,149.30
C18	51+40.00	1,962,586.61	1,099,149.29
C19	51+45.00	1,962,591.61	1,099,149.28
C20	51+50.00	1,962,596.61	1,099,149.26

PAVEMENT LAYOUT SCHEDULE

POINT	*STATION	NORTHING	EASTING
C21	51+55.00	1,962,601.61	1,099,149.25
C22	51+60.00	1,962,606.61	1,099,149.24
C23	51+65.00	1,962,611.61	1,099,149.23
C24	51+70.00	1,962,616.61	1,099,149.22
C25	51+75.00	1,962,621.61	1,099,149.21
C26	51+80.00	1,962,626.61	1,099,149.20
C27	51+85.00	1,962,631.61	1,099,149.19
C28	51+90.00	1,962,636.61	1,099,149.18
C29	51+95.00	1,962,641.61	1,099,149.17
C30	52+00.00	1,962,646.61	1,099,149.16
C31	52+05.00	1,962,651.61	1,099,149.15
C32	52+10.00	1,962,656.61	1,099,149.14
C33	52+15.00	1,962,661.61	1,099,149.12
C34	52+20.00	1,962,666.61	1,099,149.11
C35	52+25.00	1,962,671.61	1,099,149.10
C36	52+30.00	1,962,676.61	1,099,149.09
C37	52+35.00	1,962,681.61	1,099,149.08
C38	52+40.00	1,962,686.61	1,099,149.07
C39	52+45.00	1,962,691.61	1,099,149.06
C40	52+50.00	1,962,696.61	1,099,149.05

P:\1501-638 W67 CumberlandCircle\CADD Sheets\0162B16-sht-238-intersec01-wolf.dgn

HBM ENGINEERING GROUP, LLC

USER NAME = Kendrabant	DESIGNED - MAA	REVISED - 12/01/2017
	DRAWN - MAA	REVISED -
PLOT SCALE = 20.0000 ' / in.	CHECKED - JMG	REVISED -
PLOT DATE = 12/1/2017	DATE - 10/17/2017	REVISED -

STATE OF ILLINOIS
DEPARTMENT OF TRANSPORTATION

SPLITTER ISLAND AND EDGE OF PAVEMENT DETAILS
WOLF ROAD

SCALE: | SHEET 2 OF 9 SHEETS | STA. | TO STA.

F.A.P. RTE.	SECTION	COUNTY	TOTAL SHEETS	SHEET NO.
339	583-R	COOK	186	115

CONTRACT NO. 62B16
ILLINOIS FED. AID PROJECT

PAVEMENT LAYOUT SCHEDULE
WOLF ROAD

POINT	*STATION	OFFSET	**STATION	OFFSET	ELEVATION
A1	50+55.41	64.55 RT			648.95
A2	50+59.19	61.13 RT			648.97
A3	50+63.24	57.92 RT			649.00
A4	50+67.57	54.92 RT			648.97
A5	50+73.37	51.51 RT			648.95
A6	50+80.00	48.37 RT	100+80.11	18.08 RT	648.80
A7	50+85.00	46.46 RT	100+85.78	18.00 RT	648.78
A8	50+90.00	44.74 RT	100+91.39	18.00 RT	648.76
A9	50+95.00	43.11 RT	100+96.96	18.00 RT	648.75
A10	51+00.00	41.57 RT	101+02.51	18.00 RT	648.73
A11	51+05.00	40.13 RT	101+08.02	18.00 RT	648.73
A12	51+10.00	38.79 RT	101+13.51	18.00 RT	648.73
A13	51+15.00	37.54 RT	101+18.98	18.00 RT	648.74
A14	51+20.00	36.37 RT	101+24.41	18.00 RT	648.77
A15	51+25.00	35.30 RT	101+29.77	18.01 RT	648.79
A16	51+30.00	34.31 RT	101+35.10	18.04 RT	648.83
A17	51+35.00	33.42 RT	101+40.42	18.09 RT	648.88
A18	51+40.00	32.61 RT	101+45.73	18.15 RT	648.93
A19	51+45.00	31.88 RT	101+51.02	18.24 RT	648.99
A20	51+50.00	31.25 RT	101+56.30	18.34 RT	649.05
A21	51+55.00	30.69 RT	101+61.57	18.46 RT	649.13
A22	51+60.00	30.22 RT	101+66.84	18.60 RT	649.21
A23	51+65.00	29.84 RT	101+72.09	18.75 RT	649.30
A24	51+70.00	29.54 RT	101+77.35	18.93 RT	649.40
A25	51+75.00	29.32 RT	101+82.60	19.12 RT	649.51
A26	51+80.00	29.19 RT	101+87.85	19.33 RT	649.61
A27	51+85.00	29.14 RT	101+93.10	19.55 RT	649.74
A28	51+90.00	29.14 RT	101+98.35	19.76 RT	649.86
A29	51+95.00	29.14 RT	102+03.61	19.91 RT	650.00
A30	52+00.00	29.14 RT	102+08.87	19.98 RT	650.14
A31	52+05.00	29.14 RT	102+14.06	20.00 RT	650.29
A32	52+10.00	29.14 RT	102+19.06	20.00 RT	650.42
A33	52+15.00	29.14 RT	102+24.06	20.00 RT	650.56
A34	52+20.00	29.14 RT	102+29.06	20.00 RT	650.69
A35	52+25.00	29.14 RT	102+34.06	20.00 RT	650.83
A36	52+30.00	29.14 RT	102+39.06	20.00 RT	650.97
A37	52+35.00	29.14 RT	102+44.06	20.00 RT	651.10
A38	52+40.00	29.14 RT	102+49.06	20.00 RT	651.24
A39	52+45.00	29.14 RT	102+54.06	20.00 RT	651.38

PAVEMENT LAYOUT SCHEDULE
WOLF ROAD

POINT	*STATION	OFFSET	**STATION	OFFSET	ELEVATION
E1	50+54.42	75.43 LT			648.89
E2	50+58.78	67.12 LT			648.98
E3	50+62.84	59.40 LT			649.05
E4	50+67.07	52.36 LT			649.10
E5	50+71.94	45.96 LT			649.13
E6	50+77.71	39.88 LT			649.10
E7	50+84.91	33.90 LT			649.05
E8	50+92.63	28.96 LT	1100+83.57	25.55 LT	648.97
E9	50+96.41	26.99 LT	1100+88.91	25.06 LT	648.95
E10	51+00.26	25.26 LT	1100+94.18	24.63 LT	648.89
E11	51+04.16	23.76 LT	1100+99.38	24.26 LT	648.82
E12	51+08.10	22.49 LT	1101+04.53	23.94 LT	648.76
E13	51+15.00	20.82 LT	1101+13.33	23.53 LT	648.70
E14	51+20.00	20.04 LT	1101+19.58	23.33 LT	648.72
E15	51+25.00	19.59 LT	1101+25.78	23.21 LT	648.75
E16	51+30.00	19.37 LT	1101+31.96	23.07 LT	648.79
E17	51+35.00	19.32 LT	1101+38.11	22.84 LT	648.84
E18	51+40.00	19.43 LT	1101+44.24	22.52 LT	648.90
E19	51+45.00	19.71 LT	1101+50.35	22.13 LT	648.98
E20	51+50.00	20.16 LT	1101+55.73	21.70 LT	649.06
E21	51+55.00	20.78 LT	1101+60.76	21.42 LT	649.13
E22	51+60.00	21.56 LT	1101+65.82	21.31 LT	649.21
E23	51+65.00	22.39 LT	1101+70.89	21.24 LT	649.31
E24	51+70.00	23.22 LT	1101+75.96	21.18 LT	649.41
E25	51+75.00	24.06 LT	1101+81.02	21.11 LT	649.51
E26	51+80.00	24.89 LT	1101+86.09	21.04 LT	649.62
E27	51+85.00	25.70 LT	1101+91.16	20.96 LT	649.74
E28	51+90.00	26.45 LT	1101+96.21	20.81 LT	649.86
E29	51+95.00	27.12 LT	1102+01.25	20.59 LT	650.00
E30	52+00.00	27.72 LT	1102+06.28	20.29 LT	650.14
E31	52+05.00	28.25 LT	1102+09.69	20.00 LT	650.24
E32	52+10.00	28.70 LT	1102+14.42	20.00 LT	650.37
E33	52+15.00	29.08 LT	1102+19.16	20.00 LT	650.50
E34	52+20.00	29.39 LT	1102+23.88	20.00 LT	650.63
E35	52+25.00	29.63 LT	1102+28.59	20.00 LT	650.76
E36	52+30.00	29.80 LT	1102+33.32	20.00 LT	650.89
E37	52+35.00	29.89 LT	1102+38.03	20.00 LT	651.01
E38	52+40.00	29.91 LT	1102+42.80	20.00 LT	651.14
E39	52+45.00	29.91 LT	1102+47.80	20.00 LT	651.28

*STATIONS MEASURED ALONG EXISTING BASELINE
**STATIONS MEASURED ALONG PROPOSED ALIGNMENT
***STATIONS MEASURED ALONG PROPOSED BASELINE

P:\1501-638 W07 CumberlandCircle\CADD_Sheets\D162B16-sht-231-intersec02-wolf.dgn

HBM ENGINEERING GROUP, LLC

USER NAME = Kendrabant	DESIGNED - MAA	REVISED - 12/01/2017	
	DRAWN - MAA	REVISED -	
PLOT SCALE = 20.0000 ' / in.	CHECKED - JMG	REVISED -	
PLOT DATE = 12/1/2017	DATE - 10/17/2017	REVISED -	

STATE OF ILLINOIS
DEPARTMENT OF TRANSPORTATION

SPLITTER ISLAND AND EDGE OF PAVEMENT DETAILS
WOLF ROAD

SCALE: SHEET 3 OF 9 SHEETS STA. TO STA.

F.A.P. RTE.	SECTION	COUNTY	TOTAL SHEETS	SHEET NO.
339	583-R	COOK	186	116

CONTRACT NO. 62B16
ILLINOIS FED. AID PROJECT

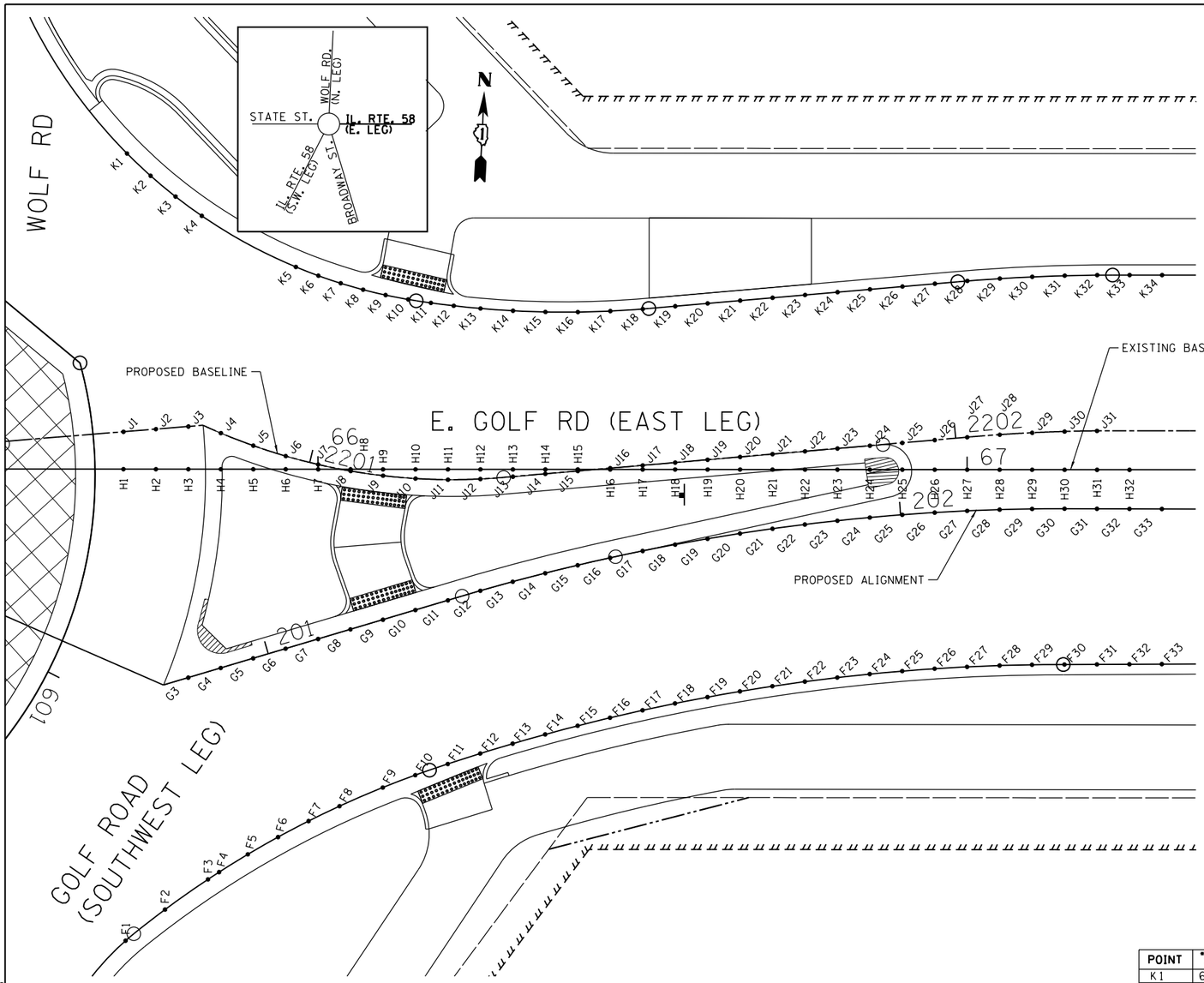

PAVEMENT LAYOUT SCHEDULE

POINT	*STATION	OFFSET	***STATION	ELEVATION
J1	65+70.00	5.75 LT	2200+70.24	
J2	65+75.00	6.16 LT	2200+75.25	
J3	65+80.00	6.58 LT	2200+80.27	
J4	65+85.00	5.56 LT	2200+85.53	
J5	65+90.00	3.64 LT	2200+90.89	
J6	65+95.00	2.03 LT	2200+96.14	648.77
J7	66+00.00	0.74 LT	2201+01.31	648.69
J8	66+05.00	0.26 RT	2201+06.41	648.62
J9	66+10.00	0.98 RT	2201+11.46	648.54
J10	66+15.00	1.42 RT	2201+16.48	648.46
J11	66+20.00	1.59 RT	2201+21.48	648.39
J12	66+25.00	1.48 RT	2201+26.48	648.31
J13	66+30.00	1.12 RT	2201+31.50	648.24
J14	66+35.00	0.68 RT	2201+36.52	648.17
J15	66+40.00	0.24 RT	2201+41.53	648.10

PAVEMENT LAYOUT SCHEDULE

POINT	*STATION	OFFSET	***STATION	ELEVATION
J16	66+45.00	0.19 LT	2201+46.55	648.04
J17	66+50.00	0.63 LT	2201+51.57	647.97
J18	66+55.00	1.07 LT	2201+56.59	647.91
J19	66+60.00	1.50 LT	2201+61.61	647.86
J20	66+65.00	1.94 LT	2201+66.63	647.80
J21	66+70.00	2.38 LT	2201+71.65	647.75
J22	66+75.00	2.81 LT	2201+76.67	647.71
J23	66+80.00	3.25 LT	2201+81.69	647.66
J24	66+85.00	3.69 LT	2201+86.71	647.62
J25	66+90.00	4.12 LT	2201+91.72	647.58
J26	66+95.00	4.56 LT	2201+96.74	647.54
J27	67+00.00	5.00 LT	2202+01.76	647.51
J28	67+05.00	5.40 LT	2202+06.78	647.47
J29	67+10.00	5.69 LT	2202+11.79	647.45
J30	67+15.00	5.89 LT	2202+16.79	647.42
J31	67+20.00	5.99 LT	2202+21.79	647.40

PAVEMENT LAYOUT SCHEDULE

POINT	*STATION	NORTHING	EASTING
H1	65+70.00	1,962,450.05	1,099,219.50
H2	65+75.00	1,962,450.30	1,099,224.50
H3	65+80.00	1,962,450.54	1,099,229.49
H4	65+85.00	1,962,450.79	1,099,234.49
H5	65+90.00	1,962,451.04	1,099,239.48
H6	65+95.00	1,962,451.28	1,099,244.47
H7	66+00.00	1,962,451.53	1,099,249.47
H8	66+05.00	1,962,451.77	1,099,254.46
H9	66+10.00	1,962,452.02	1,099,259.46
H10	66+15.00	1,962,452.27	1,099,264.45
H11	66+20.00	1,962,452.51	1,099,269.44
H12	66+25.00	1,962,452.76	1,099,274.44
H13	66+30.00	1,962,453.00	1,099,279.43
H14	66+35.00	1,962,453.25	1,099,284.43
H15	66+40.00	1,962,453.50	1,099,289.42
H16	66+45.00	1,962,453.74	1,099,294.41
H17	66+50.00	1,962,453.99	1,099,299.41
H18	66+55.00	1,962,454.23	1,099,304.40
H19	66+60.00	1,962,454.48	1,099,309.40
H20	66+65.00	1,962,454.73	1,099,314.39
H21	66+70.00	1,962,454.97	1,099,319.38
H22	66+75.00	1,962,455.22	1,099,324.38
H23	66+80.00	1,962,455.46	1,099,329.37
H24	66+85.00	1,962,455.71	1,099,334.37
H25	66+90.00	1,962,455.96	1,099,339.36
H26	66+95.00	1,962,456.20	1,099,344.35
H27	67+00.00	1,962,456.45	1,099,349.35
H28	67+05.00	1,962,456.69	1,099,354.34
H29	67+10.00	1,962,456.94	1,099,359.33
H30	67+15.00	1,962,457.19	1,099,364.33
H31	67+20.00	1,962,457.43	1,099,369.32
H32	67+25.00	1,962,457.68	1,099,374.32

PAVEMENT LAYOUT SCHEDULE

POINT	*STATION	OFFSET	**STATION	ELEVATION
G1	65+70.00	30.55 RT	200+76.38	
G2	65+75.00	32.73 RT	200+81.83	
G3	65+80.00	32.11 RT	200+87.11	
G4	65+85.00	30.62 RT	200+92.32	
G5	65+90.00	29.13 RT	200+97.54	648.60
G6	65+95.00	27.64 RT	201+02.76	648.52
G7	66+00.00	26.14 RT	201+07.98	648.45
G8	66+05.00	24.65 RT	201+13.19	648.37
G9	66+10.00	23.16 RT	201+18.41	648.29
G10	66+15.00	21.67 RT	201+23.63	648.22
G11	66+20.00	20.18 RT	201+28.85	648.14
G12	66+25.00	18.70 RT	201+34.06	648.06
G13	66+30.00	17.30 RT	201+39.25	647.99
G14	66+35.00	15.99 RT	201+44.42	647.92
G15	66+40.00	14.76 RT	201+49.57	647.86
G16	66+45.00	13.61 RT	201+54.70	647.80
G17	66+50.00	12.55 RT	201+59.81	647.74
G18	66+55.00	11.57 RT	201+64.91	647.68
G19	66+60.00	10.67 RT	201+69.99	647.63
G20	66+65.00	9.85 RT	201+75.06	647.58
G21	66+70.00	9.12 RT	201+80.11	647.53
G22	66+75.00	8.46 RT	201+85.15	647.49
G23	66+80.00	7.88 RT	201+90.19	647.45
G24	66+85.00	7.38 RT	201+95.21	647.41
G25	66+90.00	6.95 RT	202+00.23	647.38
G26	66+95.00	6.61 RT	202+05.24	647.34
G27	67+00.00	6.34 RT	202+10.25	647.32
G28	67+05.00	6.15 RT	202+15.25	647.29
G29	67+10.00	6.04 RT	202+20.25	647.27
G30	67+15.00	6.00 RT	202+25.25	647.25
G31	67+20.00	6.01 RT	202+30.25	647.23
G32	67+25.00	6.02 RT	202+35.25	647.21
G33	67+30.00	6.03 RT	202+40.25	647.20

PAVEMENT LAYOUT SCHEDULE

POINT	*STATION	OFFSET	**STATION	OFFSET	ELEVATION
F1	65+70.38	72.63 RT			648.42
F2	65+76.45	67.83 RT			648.46
F3	65+83.07	63.18 RT			648.44
F4	65+84.78	62.06 RT	200+83.12	30.07 RT	648.43
F5	65+89.21	59.32 RT	200+88.15	28.70 RT	648.32
F6	65+93.86	56.65 RT	200+93.37	27.48 RT	648.22
F7	65+98.56	54.18 RT	200+98.58	26.46 RT	648.10
F8	66+03.32	51.89 RT	201+03.80	25.62 RT	648.00
F9	66+10.00	49.01 RT	201+11.02	24.77 RT	647.90
F10	66+15.00	47.11 RT	201+16.35	24.37 RT	647.83
F11	66+20.00	45.38 RT	201+21.64	24.15 RT	647.76
F12	66+25.00	43.76 RT	201+26.90	24.03 RT	647.69
F13	66+30.00	42.24 RT	201+32.20	24.00 RT	647.61
F14	66+35.00	40.82 RT	201+37.81	24.00 RT	647.53
F15	66+40.00	39.48 RT	201+43.41	24.00 RT	647.46
F16	66+45.00	38.24 RT	201+48.97	24.00 RT	647.39

PAVEMENT LAYOUT SCHEDULE

POINT	*STATION	OFFSET	**STATION	OFFSET	ELEVATION
F17	66+50.00	37.09 RT	201+54.51	24.00 RT	647.32
F18	66+55.00	36.03 RT	201+60.03	24.00 RT	647.26
F19	66+60.00	35.05 RT	201+65.54	24.00 RT	647.20
F20	66+65.00	34.17 RT	201+71.02	24.00 RT	647.14
F21	66+70.00	33.37 RT	201+76.49	24.00 RT	647.09
F22	66+75.00	32.65 RT	201+81.94	24.00 RT	647.04
F23	66+80.00	32.03 RT	201+87.38	24.00 RT	646.99
F24	66+85.00	31.49 RT	201+92.82	24.00 RT	646.95
F25	66+90.00	31.03 RT	201+98.24	24.00 RT	646.91
F26	66+95.00	30.66 RT	202+03.65	24.00 RT	646.87
F27	67+00.00	30.37 RT	202+09.06	24.00 RT	646.84
F28	67+05.00	30.16 RT	202+14.47	24.00 RT	646.81
F29	67+10.00	30.04 RT	202+19.87	24.00 RT	646.79
F30	67+15.00	30.00 RT	202+25.31	24.00 RT	646.76
F31	67+20.00	29.97 RT	202+30.31	23.96 RT	646.75
F32	67+25.00	29.95 RT	202+35.31	23.93 RT	646.73
F33	67+30.00	29.92 RT	202+40.31	23.89 RT	646.72

PAVEMENT LAYOUT SCHEDULE

POINT	*STATION	OFFSET	***STATION	OFFSET	ELEVATION
K1	65+70.52	48.63 LT			648.93
K2	65+74.16	45.19 LT			648.91
K3	65+78.01	41.99 LT			648.88
K4	65+82.05	39.03 LT			648.86
K5	65+96.55	31.17 LT	2200+86.61	28.07 LT	648.36
K6	66+00.01	29.82 LT	2200+91.95	28.02 LT	648.28
K7	66+03.46	28.66 LT	2200+97.18	27.93 LT	648.20
K8	66+06.91	27.67 LT	2201+02.33	27.79 LT	648.12
K9	66+10.38	26.84 LT	2201+07.43	27.62 LT	648.05
K10	66+13.85	26.17 LT	2201+12.46	27.41 LT	647.97
K11	66+17.35	25.64 LT	2201+17.48	27.15 LT	647.91
K12	66+20.87	25.20 LT	2201+22.47	26.79 LT	647.83
K13	66+25.00	24.79 LT	2201+28.24	26.23 LT	647.76
K14	66+30.00	24.44 LT	2201+33.72	25.46 LT	647.70
K15	66+35.00	24.26 LT	2201+38.68	24.85 LT	647.64
K16	66+40.00	24.25 LT	2201+43.66	24.40 LT	647.58
K17	66+45.00	24.40 LT	2201+48.66	24.12 LT	647.53

PAVEMENT LAYOUT SCHEDULE

POINT	*STATION	OFFSET	***STATION	OFFSET	ELEVATION
K18	66+50.00	24.72 LT	2201+53.66	24.00 LT	647.47
K19	66+55.00	25.16 LT	2201+58.68	24.00 LT	647.41
K20	66+60.00	25.59 LT	2201+63.70	24.00 LT	647.36
K21	66+65.00	26.03 LT	2201+68.72	24.00 LT	647.30
K22	66+70.00	26.47 LT	2201+73.74	24.00 LT	647.25
K23	66+75.00	26.91 LT	2201+78.76	24.00 LT	647.21
K24	66+80.00	27.34 LT	2201+83.78	24.00 LT	647.16
K25	66+85.00	27.78 LT	2201+88.80	24.00 LT	647.12
K26	66+90.00	28.22 LT	2201+93.82	24.00 LT	647.08
K27	66+95.00	28.65 LT	2201+98.84	24.00 LT	647.05
K28	67+00.00	29.08 LT	2202+03.73	24.00 LT	647.01
K29	67+05.00	29.45 LT	2202+08.31	24.00 LT	646.99
K30	67+10.00	29.72 LT	2202+12.87	24.00 LT	646.96
K31	67+15.00	29.90 LT	2202+17.44	24.00 LT	646.94
K32	67+20.00	29.99 LT	2202+22.00	24.00 LT	646.92
K33	67+25.00	30.00 LT	2202+26.79	24.00 LT	646.90
K34	67+30.00	30.00 LT	2202+31.79	24.00 LT	646.88

*STATIONS MEASURED ALONG EXISTING BASELINE
**STATIONS MEASURED ALONG PROPOSED ALIGNMENT
***STATIONS MEASURED ALONG PROPOSED BASELINE

P:\1501-638 W07 CumberlandCircle\CADD\Sheets\D162B16-sht-233-intersec03_golf.dgn

HBM ENGINEERING GROUP, LLC

USER NAME = Ken.drabant	DESIGNED - MAA	REVISED - 12/01/2017	
	DRAWN - MAA	REVISED -	
PLOT SCALE = 20.0000 ' / in.	CHECKED - JMG	REVISED -	
PLOT DATE = 12/1/2017	DATE - 10/17/2017	REVISED -	

STATE OF ILLINOIS
DEPARTMENT OF TRANSPORTATION

SPLITTER ISLAND AND EDGE OF PAVEMENT DETAILS
GOLF ROAD (EAST LEG)

SCALE: SHEET 4 OF 9 SHEETS STA. TO STA.

F.A.P. RTE.	SECTION	COUNTY	TOTAL SHEETS	SHEET NO.
339	583-R	COOK	186	117

CONTRACT NO. 62B16
ILLINOIS FED. AID PROJECT

PAVEMENT LAYOUT SCHEDULE

POINT	*STATION	OFFSET	**STATION	ELEVATION
M1	50+90.00	21.50 RT	305+11.52	
M2	50+95.00	22.70 RT	305+06.38	
M3	51+00.00	21.51 RT	305+01.17	
M4	51+05.00	20.11 RT	304+95.98	
M5	51+10.00	18.80 RT	304+90.81	648.19
M6	51+15.00	17.57 RT	304+85.66	648.16
M7	51+20.00	16.43 RT	304+80.53	648.12
M8	51+25.00	15.38 RT	304+75.42	648.09
M9	51+30.00	14.40 RT	304+70.33	648.06
M10	51+35.00	13.51 RT	304+65.25	648.02
M11	51+40.00	12.70 RT	304+60.18	647.99
M12	51+45.00	11.97 RT	304+55.13	647.96
M13	51+50.00	11.33 RT	304+50.09	647.92
M14	51+55.00	10.76 RT	304+45.06	647.89
M15	51+60.00	10.27 RT	304+40.03	647.86
M16	51+65.00	9.86 RT	304+35.02	647.82
M17	51+70.00	9.53 RT	304+30.01	647.79
M18	51+75.00	9.27 RT	304+25.00	647.76
M19	51+80.00	9.10 RT	304+20.00	647.72
M20	51+85.00	9.00 RT	304+14.99	647.69
M21	51+90.00	8.98 RT	304+09.99	647.66
M22	51+95.00	8.98 RT	304+04.99	647.63
M23	52+00.00	8.98 RT	303+99.99	647.59
M24	52+05.00	8.98 RT	303+94.99	647.56
M25	52+10.00	8.98 RT	303+89.99	647.53
M26	52+15.00	8.98 RT	303+84.99	647.49
M27	52+20.00	8.98 RT	303+79.99	647.46
M28	52+25.00	8.97 RT	303+74.99	647.43

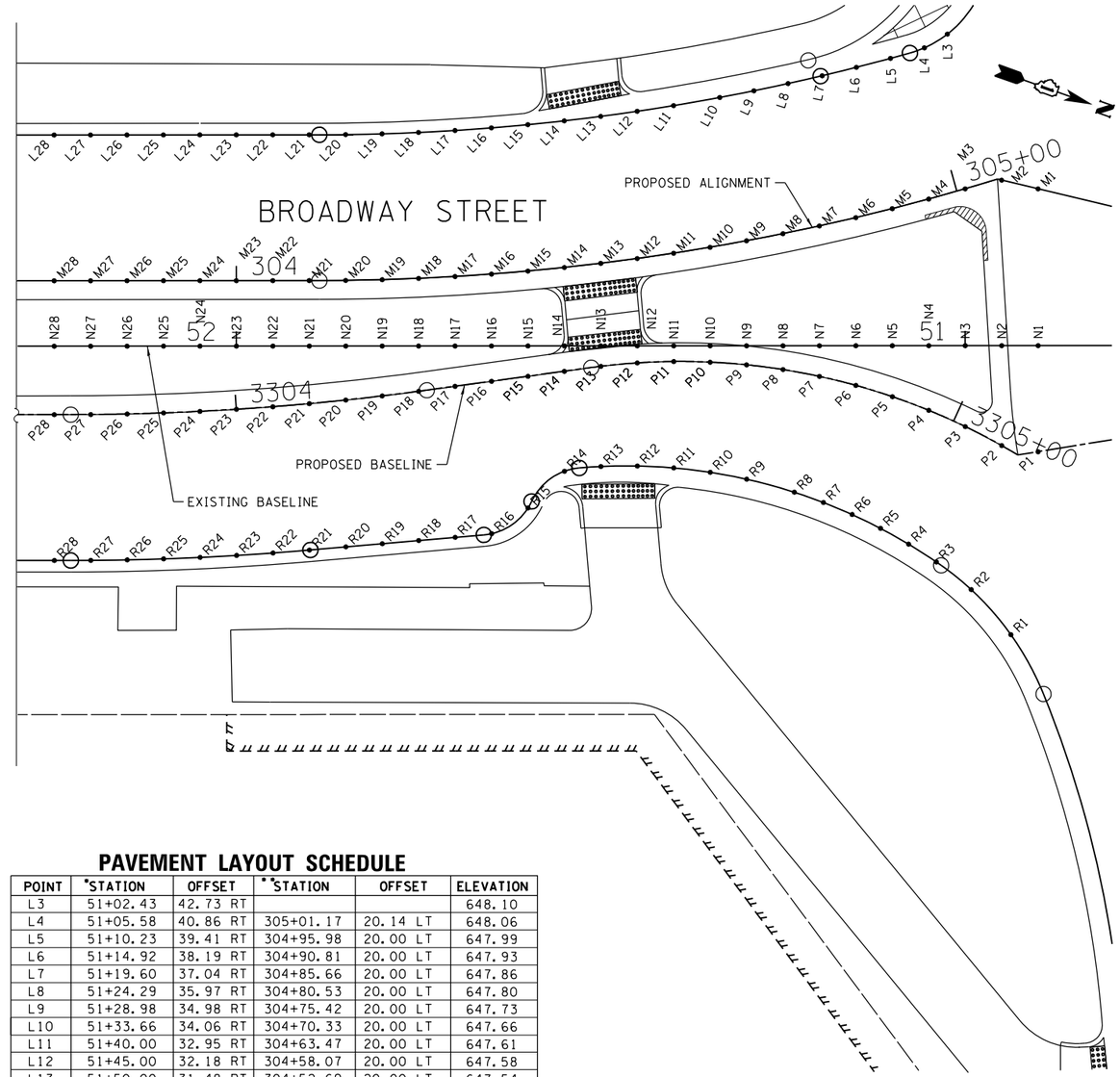

PAVEMENT LAYOUT SCHEDULE

POINT	*STATION	OFFSET	***STATION	OFFSET	ELEVATION
R1	50+93.75	39.64 LT			648.38
R2	50+99.20	33.45 LT			648.31
R3	51+03.97	29.67 LT	3305+07.40	18.31 RT	648.21
R4	51+07.78	27.21 LT	3305+01.76	17.90 RT	648.17
R5	51+11.63	25.05 LT	3304+96.28	17.48 RT	648.14
R6	51+15.52	23.15 LT	3304+90.94	17.07 RT	648.10
R7	51+19.47	21.49 LT	3304+85.70	16.66 RT	648.06
R8	51+23.45	20.08 LT	3304+80.56	16.25 RT	647.86
R9	51+30.00	18.29 LT	3304+72.35	15.58 RT	647.82
R10	51+35.00	17.34 LT	3304+66.24	15.08 RT	647.78
R11	51+40.00	16.74 LT	3304+60.24	14.59 RT	647.75
R12	51+45.00	16.47 LT	3304+54.31	14.10 RT	647.71
R13	51+50.00	16.54 LT	3304+48.52	13.62 RT	647.68
R14	51+55.00	17.19 LT	3304+43.48	13.58 RT	647.64
R15	51+60.00	22.22 LT	3304+37.84	17.88 RT	647.50
R16	51+65.00	25.74 LT	3304+32.42	20.70 RT	647.41
R17	51+70.00	26.25 LT	3304+27.39	20.52 RT	647.37
R18	51+75.00	26.68 LT	3304+22.58	20.29 RT	647.34
R19	51+80.00	27.11 LT	3304+17.83	20.13 RT	647.31
R20	51+85.00	27.55 LT	3304+13.08	20.03 RT	647.27
R21	51+90.00	27.98 LT	3304+08.32	20.00 RT	647.24
R22	51+95.00	28.38 LT	3304+03.58	20.00 RT	647.20
R23	52+00.00	28.71 LT	3303+98.83	20.00 RT	647.16
R24	52+05.00	28.97 LT	3303+94.09	20.00 RT	647.13
R25	52+10.00	29.17 LT	3303+89.34	20.00 RT	647.09
R26	52+15.00	29.31 LT	3303+84.60	20.00 RT	647.05
R27	52+20.00	29.38 LT	3303+79.87	20.00 RT	647.02
R28	52+25.00	29.38 LT	3303+75.01	20.00 RT	646.98

PAVEMENT LAYOUT SCHEDULE

POINT	*STATION	OFFSET	**STATION	OFFSET	ELEVATION
L3	51+02.43	42.73 RT			648.10
L4	51+05.58	40.86 RT	305+01.17	20.14 LT	648.06
L5	51+10.23	39.41 RT	304+95.98	20.00 LT	647.99
L6	51+14.92	38.19 RT	304+90.81	20.00 LT	647.93
L7	51+19.60	37.04 RT	304+85.66	20.00 LT	647.86
L8	51+24.29	35.97 RT	304+80.53	20.00 LT	647.80
L9	51+28.98	34.98 RT	304+75.42	20.00 LT	647.73
L10	51+33.66	34.06 RT	304+70.33	20.00 LT	647.66
L11	51+40.00	32.95 RT	304+63.47	20.00 LT	647.61
L12	51+45.00	32.18 RT	304+58.07	20.00 LT	647.58
L13	51+50.00	31.48 RT	304+52.69	20.00 LT	647.54
L14	51+55.00	30.87 RT	304+47.31	20.00 LT	647.50
L15	51+60.00	30.35 RT	304+41.96	20.00 LT	647.47
L16	51+65.00	29.92 RT	304+36.60	20.00 LT	647.43
L17	51+70.00	29.56 RT	304+31.26	20.00 LT	647.40
L18	51+75.00	29.29 RT	304+25.91	20.00 LT	647.36
L19	51+80.00	29.11 RT	304+20.57	20.00 LT	647.33
L20	51+85.00	29.00 RT	304+15.24	20.00 LT	647.29
L21	51+90.00	28.98 RT	304+10.00	20.00 LT	647.26
L22	51+95.00	28.98 RT	304+05.00	20.00 LT	647.23
L23	52+00.00	28.98 RT	304+00.00	20.00 LT	647.19
L24	52+05.00	28.98 RT	303+95.00	20.00 LT	647.16
L25	52+10.00	28.98 RT	303+90.00	20.00 LT	647.13
L26	52+15.00	28.98 RT	303+85.00	20.00 LT	647.09
L27	52+20.00	28.98 RT	303+80.00	20.00 LT	647.06
L28	52+25.00	28.97 RT	303+75.00	20.00 LT	647.03

*STATIONS MEASURED ALONG EXISTING BASELINE
**STATIONS MEASURED ALONG PROPOSED ALIGNMENT
***STATIONS MEASURED ALONG PROPOSED BASELINE

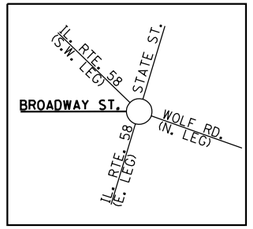

P:\1501-638 W07 Cumberland-Circle\CADD_Sheets\D162B16-sht-235-intersect05-bridge.dgn

HBM ENGINEERING GROUP, LLC

USER NAME = Kendrabant	DESIGNED - MAA	REVISED - 12/01/2017	
	DRAWN - MAA	REVISED -	
PLOT SCALE = 20.0000 ' / in.	CHECKED - JMG	REVISED -	
PLOT DATE = 12/1/2017	DATE - 10/17/2017	REVISED -	

STATE OF ILLINOIS
DEPARTMENT OF TRANSPORTATION

SPLITTER ISLAND AND EDGE OF PAVEMENT DETAILS
BROADWAY STREET

SCALE: | SHEET 5 OF 9 SHEETS | STA. TO STA.

F.A.P. RTE.	SECTION	COUNTY	TOTAL SHEETS	SHEET NO.
339	583-R	COOK	186	118

CONTRACT NO. 62B16
ILLINOIS FED. AID PROJECT

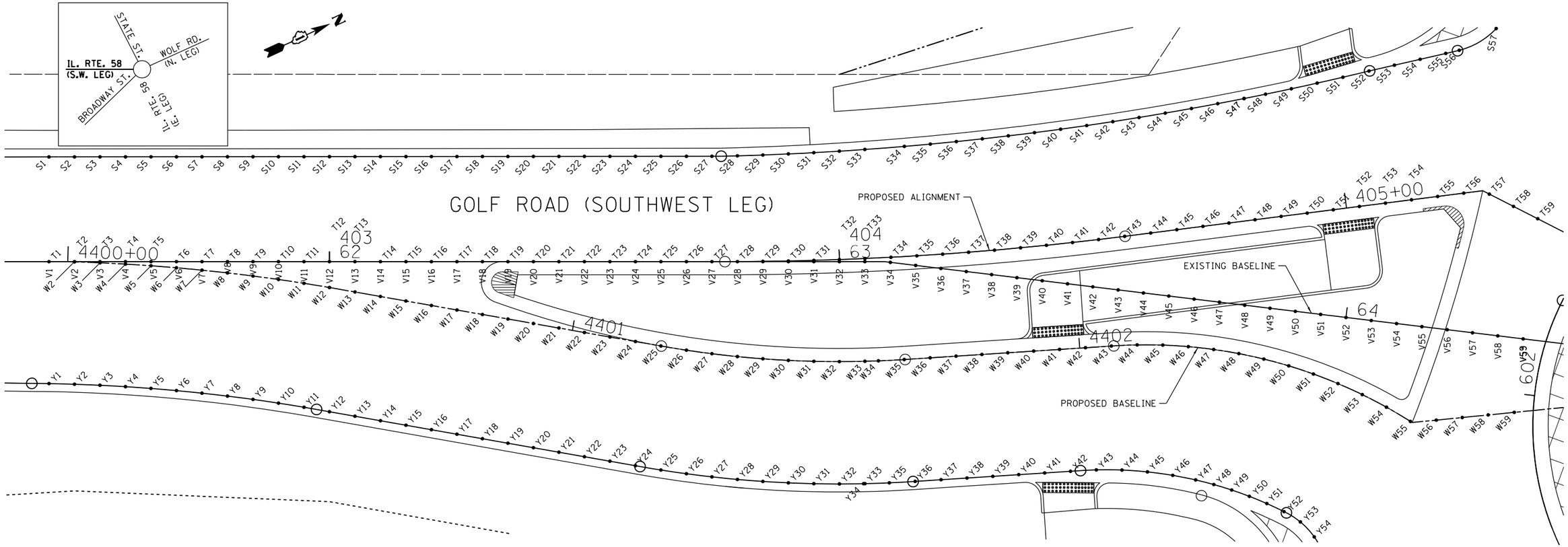

PAVEMENT LAYOUT SCHEDULE

POINT	*STATION	OFFSET	***STATION	ELEVATION
W2	61+50.00	0.04 RT	4400+01.33	643.95
W3	61+55.00	0.23 RT	4400+06.33	644.11
W4	61+60.00	0.48 RT	4400+11.34	644.26
W5	61+65.00	0.81 RT	4400+16.35	644.41
W6	61+70.00	1.21 RT	4400+21.36	644.57
W7	61+75.00	1.67 RT	4400+26.38	644.72
W8	61+80.00	2.21 RT	4400+31.41	644.87
W9	61+85.00	2.82 RT	4400+36.45	645.01
W10	61+90.00	3.50 RT	4400+41.50	645.15
W11	61+95.00	4.25 RT	4400+46.55	645.28
W12	62+00.00	5.07 RT	4400+51.62	645.41
W13	62+05.00	5.95 RT	4400+56.70	645.54
W14	62+10.00	6.83 RT	4400+61.77	645.66
W15	62+15.00	7.72 RT	4400+66.85	645.77
W16	62+20.00	8.60 RT	4400+71.93	645.88
W17	62+25.00	9.49 RT	4400+77.01	645.99
W18	62+30.00	10.37 RT	4400+82.08	646.09
W19	62+35.00	11.25 RT	4400+87.16	646.19
W20	62+40.00	12.13 RT	4400+92.24	646.28
W21	62+45.00	13.02 RT	4400+97.32	646.37
W22	62+50.00	13.90 RT	4401+02.39	646.46
W23	62+55.00	14.78 RT	4401+07.47	646.53
W24	62+60.00	15.67 RT	4401+12.55	646.61
W25	62+65.00	16.55 RT	4401+17.63	646.68
W26	62+70.00	17.37 RT	4401+22.69	646.74
W27	62+75.00	18.06 RT	4401+27.74	646.81
W28	62+80.00	18.62 RT	4401+32.77	646.87
W29	62+85.00	19.06 RT	4401+37.79	646.93
W30	62+90.00	19.37 RT	4401+42.80	646.99

PAVEMENT LAYOUT SCHEDULE

POINT	*STATION	OFFSET	***STATION	ELEVATION
W31	62+95.00	19.56 RT	4401+47.80	647.05
W32	63+00.00	19.62 RT	4401+52.80	647.11
W33	63+05.00	19.55 RT	4401+57.81	647.17
W34	63+07.65	19.46 RT	4401+60.46	647.20
W35	63+15.00	18.59 RT	4401+65.54	647.27
W36	63+20.00	17.66 RT	4401+70.62	647.33
W37	63+25.00	16.72 RT	4401+75.71	647.39
W38	63+30.00	15.78 RT	4401+80.80	647.45
W39	63+35.00	14.84 RT	4401+85.88	647.51
W40	63+40.00	13.90 RT	4401+90.97	647.57
W41	63+45.00	12.96 RT	4401+96.06	647.64
W42	63+50.00	12.03 RT	4402+01.15	647.70
W43	63+55.00	11.09 RT	4402+06.23	647.76
W44	63+60.00	10.26 RT	4402+11.30	647.82
W45	63+65.00	9.70 RT	4402+16.33	647.88
W46	63+70.00	9.39 RT	4402+21.34	647.94
W47	63+75.00	9.35 RT	4402+26.34	648.00
W48	63+80.00	9.56 RT	4402+31.35	648.06
W49	63+85.00	10.04 RT	4402+36.37	648.12
W50	63+90.00	10.77 RT	4402+41.43	648.19
W51	63+95.00	11.78 RT	4402+46.53	648.25
W52	64+00.00	13.06 RT	4402+51.69	648.31
W53	64+05.00	14.64 RT	4402+56.93	648.37
W54	64+10.00	16.52 RT	4402+62.28	648.44
W55	64+15.00	18.72 RT	4402+67.74	648.51
W56	64+20.00	17.86 RT	4402+72.90	648.58
W57	64+25.00	16.75 RT	4402+78.02	648.65
W58	64+30.00	15.63 RT	4402+83.14	648.63
W59	64+35.00	14.51 RT	4402+88.27	648.56

PAVEMENT LAYOUT SCHEDULE

POINT	*STATION	NORTHING	EASTING
V1	61+45.00	1,962,135.82	1,098,979.35
V2	61+50.00	1,962,140.35	1,098,981.46
V3	61+55.00	1,962,144.88	1,098,983.58
V4	61+60.00	1,962,149.41	1,098,985.69
V5	61+65.00	1,962,153.94	1,098,987.80
V6	61+70.00	1,962,158.48	1,098,989.91
V7	61+75.00	1,962,163.01	1,098,992.03
V8	61+80.00	1,962,167.54	1,098,994.14
V9	61+85.00	1,962,172.07	1,098,996.25
V10	61+90.00	1,962,176.60	1,098,998.36
V11	61+95.00	1,962,181.13	1,099,000.48
V12	62+00.00	1,962,185.67	1,099,002.59
V13	62+05.00	1,962,190.20	1,099,004.70
V14	62+10.00	1,962,194.73	1,099,006.82
V15	62+15.00	1,962,199.26	1,099,008.93
V16	62+20.00	1,962,203.79	1,099,011.04
V17	62+25.00	1,962,208.32	1,099,013.15
V18	62+30.00	1,962,212.86	1,099,015.27
V19	62+35.00	1,962,217.39	1,099,017.38
V20	62+40.00	1,962,221.92	1,099,019.49
V21	62+45.00	1,962,226.45	1,099,021.61
V22	62+50.00	1,962,230.98	1,099,023.72
V23	62+55.00	1,962,235.51	1,099,025.83
V24	62+60.00	1,962,240.05	1,099,027.94
V25	62+65.00	1,962,244.58	1,099,030.06
V26	62+70.00	1,962,249.11	1,099,032.17
V27	62+75.00	1,962,253.64	1,099,034.28
V28	62+80.00	1,962,258.17	1,099,036.40
V29	62+85.00	1,962,262.70	1,099,038.51
V30	62+90.00	1,962,267.24	1,099,040.62

PAVEMENT LAYOUT SCHEDULE

POINT	*STATION	NORTHING	EASTING
V31	62+95.00	1,962,271.77	1,099,042.73
V32	63+00.00	1,962,276.30	1,099,044.85
V33	63+05.00	1,962,280.83	1,099,046.96
V34	63+10.00	1,962,285.30	1,099,049.20
V35	63+15.00	1,962,289.54	1,099,051.84
V36	63+20.00	1,962,293.79	1,099,054.48
V37	63+25.00	1,962,298.03	1,099,057.12
V38	63+30.00	1,962,302.28	1,099,059.76
V39	63+35.00	1,962,306.52	1,099,062.41
V40	63+40.00	1,962,310.77	1,099,065.05
V41	63+45.00	1,962,315.01	1,099,067.69
V42	63+50.00	1,962,319.26	1,099,070.33
V43	63+55.00	1,962,323.50	1,099,072.97
V44	63+60.00	1,962,327.75	1,099,075.62
V45	63+65.00	1,962,331.99	1,099,078.26
V46	63+70.00	1,962,336.24	1,099,080.90
V47	63+75.00	1,962,340.48	1,099,083.54
V48	63+80.00	1,962,344.73	1,099,086.18
V49	63+85.00	1,962,348.97	1,099,088.82
V50	63+90.00	1,962,353.22	1,099,091.47
V51	63+95.00	1,962,357.46	1,099,094.11
V52	64+00.00	1,962,361.71	1,099,096.75
V53	64+05.00	1,962,365.95	1,099,099.39
V54	64+10.00	1,962,370.20	1,099,102.03
V55	64+15.00	1,962,374.44	1,099,104.68
V56	64+20.00	1,962,378.69	1,099,107.32
V57	64+25.00	1,962,382.93	1,099,109.96
V58	64+30.00	1,962,387.18	1,099,112.60
V59	64+35.00	1,962,391.42	1,099,115.24

*STATIONS MEASURED ALONG EXISTING BASELINE
**STATIONS MEASURED ALONG PROPOSED ALIGNMENT
***STATIONS MEASURED ALONG PROPOSED BASELINE

P:\5801-638 W07 Cumberland&Circle\CADD_Sheets\D162B16-sht-237-intersect07.dlf wcdgn

HBM ENGINEERING GROUP, LLC

USER NAME = Kendrabant	DESIGNED - MAA	REVISED - 12/01/2017	
	DRAWN - MAA	REVISED -	
PLOT SCALE = 20.0000 ' / in.	CHECKED - JMG	REVISED -	
PLOT DATE = 12/1/2017	DATE - 10/17/2017	REVISED -	

STATE OF ILLINOIS
DEPARTMENT OF TRANSPORTATION

SPLITTER ISLAND AND EDGE OF PAVEMENT DETAILS
GOLF ROAD (SOUTHWEST LEG)

SCALE: SHEET 6 OF 9 SHEETS STA. TO STA.

F.A.P. RTE.	SECTION	COUNTY	TOTAL SHEETS	SHEET NO.
339	583-R	COOK	186	119

CONTRACT NO. 62B16
ILLINOIS FED. AID PROJECT

PAVEMENT LAYOUT SCHEDULE

GOLF ROAD (SW)

POINT	*STATION	OFFSET	**STATION	OFFSET	ELEVATION
S1	61+45.00	20.54 LT	402+45.00	20.54 LT	643.38
S2	61+50.00	20.55 LT	402+50.00	20.55 LT	643.54
S3	61+55.00	20.55 LT	402+55.00	20.55 LT	643.71
S4	61+60.00	20.56 LT	402+60.00	20.56 LT	643.87
S5	61+65.00	20.56 LT	402+65.00	20.56 LT	644.04
S6	61+70.00	20.57 LT	402+70.00	20.57 LT	644.20
S7	61+75.00	20.57 LT	402+75.00	20.57 LT	644.36
S8	61+80.00	20.58 LT	402+80.00	20.58 LT	644.51
S9	61+85.00	20.58 LT	402+85.00	20.58 LT	644.66
S10	61+90.00	20.59 LT	402+90.00	20.59 LT	644.80
S11	61+95.00	20.59 LT	402+95.00	20.59 LT	644.94
S12	62+00.00	20.60 LT	403+00.00	20.60 LT	645.08
S13	62+05.00	20.60 LT	403+05.00	20.60 LT	645.21
S14	62+10.00	20.61 LT	403+10.00	20.61 LT	645.33
S15	62+15.00	20.61 LT	403+15.00	20.61 LT	645.45
S16	62+20.00	20.62 LT	403+20.00	20.62 LT	645.57
S17	62+25.00	20.62 LT	403+25.00	20.62 LT	645.67
S18	62+30.00	20.63 LT	403+30.00	20.63 LT	645.78
S19	62+35.00	20.63 LT	403+35.00	20.63 LT	645.88
S20	62+40.00	20.64 LT	403+40.00	20.64 LT	645.97
S21	62+45.00	20.64 LT	403+45.00	20.64 LT	646.06
S22	62+50.00	20.65 LT	403+50.00	20.65 LT	646.15
S23	62+55.00	20.65 LT	403+55.00	20.65 LT	646.23
S24	62+60.00	20.66 LT	403+60.00	20.66 LT	646.30
S25	62+65.00	20.66 LT	403+65.00	20.66 LT	646.37
S26	62+70.00	20.67 LT	403+70.00	20.67 LT	646.43
S27	62+75.00	20.67 LT	403+75.00	20.67 LT	646.49
S28	62+80.00	20.76 LT	403+80.08	20.76 LT	646.54
S29	62+85.00	20.93 LT	403+85.26	20.88 LT	646.61
S30	62+90.00	21.14 LT	403+90.44	21.01 LT	646.67
S31	62+95.00	21.39 LT	403+95.61	21.13 LT	646.73
S32	63+00.00	21.68 LT	404+00.80	21.26 LT	646.78
S33	63+05.00	22.01 LT	404+05.98	21.39 LT	646.84
S34	63+10.00	22.92 LT	404+14.03	21.58 LT	646.94
S35	63+15.00	23.98 LT	404+19.32	21.71 LT	647.00
S36	63+20.00	25.08 LT	404+24.63	21.84 LT	647.05
S37	63+25.00	26.23 LT	404+29.94	21.97 LT	647.12
S38	63+30.00	27.42 LT	404+35.27	22.10 LT	647.18
S39	63+35.00	28.66 LT	404+40.62	22.23 LT	647.24
S40	63+40.00	29.95 LT	404+45.97	22.35 LT	647.30
S41	63+45.00	31.28 LT	404+51.33	22.48 LT	647.36
S42	63+50.00	32.65 LT	404+56.70	22.61 LT	647.43
S43	63+55.00	34.08 LT	404+61.90	22.77 LT	647.48
S44	63+60.00	35.55 LT	404+67.10	22.97 LT	647.54
S45	63+65.00	37.06 LT	404+72.32	23.22 LT	647.60
S46	63+70.00	38.63 LT	404+77.55	23.52 LT	647.65
S47	63+75.00	40.24 LT	404+82.80	23.86 LT	647.71
S48	63+79.09	41.60 LT	404+87.09	24.17 LT	647.80
S49	63+83.98	43.26 LT	404+92.24	24.59 LT	647.90
S50	63+88.87	44.97 LT	404+97.40	25.05 LT	647.99
S51	63+93.75	46.73 LT	405+02.56	25.56 LT	648.08
S52	63+98.68	48.55 LT	405+07.79	26.12 LT	648.17
S53	64+03.48	50.29 LT	405+12.87	26.63 LT	648.27
S54	64+08.36	52.04 LT	405+18.03	27.14 LT	648.36
S55	64+13.25	53.79 LT	405+23.15	27.65 LT	648.45
S56	64+15.75	54.71 LT	405+25.85	27.92 LT	648.46
S57	64+22.43	59.81 LT			648.51

PAVEMENT LAYOUT SCHEDULE

GOLF ROAD (SW)

POINT	*STATION	OFFSET	**STATION	ELEVATION
T1	61+45.00	0.00 LT	402+45.00	643.79
T2	61+50.00	0.00 LT	402+50.00	643.95
T3	61+55.00	0.00 LT	402+55.00	644.12
T4	61+60.00	0.00 LT	402+60.00	644.28
T5	61+65.00	0.00 LT	402+65.00	644.45
T6	61+70.00	0.00 LT	402+70.00	644.61
T7	61+75.00	0.00 LT	402+75.00	644.77
T8	61+80.00	0.00 LT	402+80.00	644.92
T9	61+85.00	0.00 LT	402+85.00	645.07
T10	61+90.00	0.00 LT	402+90.00	645.21
T11	61+95.00	0.00 LT	402+95.00	645.35
T12	62+00.00	0.00 LT	403+00.00	645.49
T13	62+05.00	0.00 LT	403+05.00	645.62
T14	62+10.00	0.00 LT	403+10.00	645.74
T15	62+15.00	0.00 LT	403+15.00	645.86
T16	62+20.00	0.00 LT	403+20.00	645.98
T17	62+25.00	0.00 LT	403+25.00	646.08
T18	62+30.00	0.00 LT	403+30.00	646.19
T19	62+35.00	0.00 LT	403+35.00	646.29
T20	62+40.00	0.00 LT	403+40.00	646.38
T21	62+45.00	0.00 LT	403+45.00	646.47
T22	62+50.00	0.00 LT	403+50.00	646.56
T23	62+55.00	0.00 LT	403+55.00	646.64
T24	62+60.00	0.00 LT	403+60.00	646.71
T25	62+65.00	0.00 LT	403+65.00	646.78
T26	62+70.00	0.00 LT	403+70.00	646.84
T27	62+75.00	0.00 LT	403+75.00	646.90
T28	62+80.00	0.00 LT	403+80.00	646.96
T29	62+85.00	0.04 LT	403+85.00	647.02
T30	62+90.00	0.12 LT	403+90.00	647.08
T31	62+95.00	0.25 LT	403+95.00	647.14
T32	63+00.00	0.41 LT	404+00.00	647.20
T33	63+05.00	0.61 LT	404+05.01	647.26
T34	63+10.00	1.00 LT	404+10.13	647.32
T35	63+15.00	1.90 LT	404+15.21	647.38
T36	63+20.00	2.83 LT	404+20.29	647.44
T37	63+25.00	3.81 LT	404+25.39	647.50
T38	63+30.00	4.83 LT	404+30.49	647.56
T39	63+35.00	5.90 LT	404+35.60	647.62
T40	63+40.00	7.01 LT	404+40.72	647.69
T41	63+45.00	8.16 LT	404+45.86	647.75
T42	63+50.00	9.35 LT	404+51.00	647.81
T43	63+55.00	10.59 LT	404+56.15	647.87
T44	63+60.00	11.85 LT	404+61.30	647.93
T45	63+65.00	13.11 LT	404+66.46	647.99
T46	63+70.00	14.38 LT	404+71.62	648.05
T47	63+75.00	15.64 LT	404+76.77	648.11
T48	63+80.00	16.90 LT	404+81.93	648.18
T49	63+85.00	18.16 LT	404+87.09	648.24
T50	63+90.00	19.42 LT	404+92.24	648.30
T51	63+95.00	20.68 LT	404+97.40	648.36
T52	64+00.00	21.95 LT	405+02.56	648.42
T53	64+05.00	23.21 LT	405+07.71	648.48
T54	64+10.00	24.47 LT	405+12.87	648.54
T55	64+15.00	25.73 LT	405+18.03	648.60
T56	64+20.00	26.99 LT	405+23.18	648.67
T57	64+25.00	27.41 LT	405+28.39	648.71
T58	64+30.00	25.58 LT	405+33.71	648.71
T59	64+35.00	23.75 LT	405+39.03	648.71

PAVEMENT LAYOUT SCHEDULE

GOLF ROAD (SW)

POINT	*STATION	OFFSET	***STATION	OFFSET	ELEVATION
Y1	61+45.00	23.92 RT	4400+02.11	24.00 RT	643.31
Y2	61+50.00	24.05 RT	4400+07.47	24.00 RT	643.50
Y3	61+55.00	24.25 RT	4400+12.84	24.00 RT	643.66
Y4	61+60.00	24.53 RT	4400+18.21	24.00 RT	643.83
Y5	61+65.00	24.88 RT	4400+23.59	24.00 RT	643.99
Y6	61+70.00	25.30 RT	4400+28.96	24.00 RT	644.16
Y7	61+75.00	25.80 RT	4400+34.36	24.00 RT	644.31
Y8	61+80.00	26.38 RT	4400+39.76	24.00 RT	644.47
Y9	61+85.00	27.03 RT	4400+45.18	24.00 RT	644.62
Y10	61+90.00	27.76 RT	4400+50.61	24.00 RT	644.76
Y11	61+95.00	28.57 RT	4400+55.86	24.00 RT	644.90
Y12	62+00.00	29.44 RT	4400+60.94	24.00 RT	645.03
Y13	62+05.00	30.32 RT	4400+66.02	24.00 RT	645.16
Y14	62+10.00	31.21 RT	4400+71.10	24.00 RT	645.27
Y15	62+15.00	32.09 RT	4400+76.17	24.00 RT	645.39
Y16	62+20.00	32.97 RT	4400+81.25	24.00 RT	645.49
Y17	62+25.00	33.86 RT	4400+86.33	24.00 RT	645.60
Y18	62+30.00	34.74 RT	4400+91.40	24.00 RT	645.69
Y19	62+35.00	35.62 RT	4400+96.48	24.00 RT	645.79
Y20	62+40.00	36.51 RT	4401+01.56	24.00 RT	645.88
Y21	62+45.00	37.39 RT	4401+06.64	24.00 RT	645.96
Y22	62+50.00	38.27 RT	4401+11.71	24.00 RT	646.04
Y23	62+55.00	39.16 RT	4401+16.79	24.00 RT	646.12
Y24	62+60.00	40.04 RT	4401+21.41	24.00 RT	646.19
Y25	62+65.00	40.88 RT	4401+25.93	24.00 RT	646.25
Y26	62+70.00	41.61 RT	4401+30.42	24.00 RT	646.30
Y27	62+75.00	42.23 RT	4401+34.91	24.00 RT	646.36
Y28	62+80.00	42.73 RT	4401+39.39	24.00 RT	646.41
Y29	62+85.00	43.12 RT	4401+43.86	24.00 RT	646.47
Y30	62+90.00	43.40 RT	4401+48.32	24.00 RT	646.52
Y31	62+95.00	43.56 RT	4401+52.80	24.00 RT	646.58
Y32	63+00.00	43.62 RT	4401+57.26	24.00 RT	646.63
Y33	63+05.00	43.56 RT	4401+57.02	24.00 RT	646.68
Y34	63+04.73	43.56 RT	4401+61.54	24.00 RT	646.68
Y35	63+15.00	42.97 RT	4401+66.12	24.00 RT	646.74
Y36	63+20.00	42.08 RT	4401+71.21	24.00 RT	646.79
Y37	63+25.00	41.14 RT	4401+76.30	24.00 RT	646.85
Y38	63+30.00	40.20 RT	4401+81.38	24.00 RT	646.92
Y39	63+35.00	39.26 RT	4401+86.47	24.00 RT	646.98
Y40	63+40.00	38.32 RT	4401+91.56	24.00 RT	647.04
Y41	63+45.00	37.38 RT	4401+96.64	24.00 RT	647.10
Y42	63+50.00	36.45 RT	4402+01.72	24.06 RT	647.16
Y43	63+55.00	35.57 RT	4402+06.74	24.42 RT	647.22
Y44	63+60.00	35.00 RT	4402+13.42	24.93 RT	647.27
Y45	63+65.00	34.75 RT	4402+20.15	25.42 RT	647.35
Y46	63+70.00	34.83 RT	4402+20.15	25.42 RT	647.42
Y47	63+74.56	35.18 RT	4402+26.34	25.84 RT	647.48
Y48	63+78.21	35.66 RT	4402+31.35	26.15 RT	647.53
Y49	63+81.82	36.30 RT	4402+36.36	26.46 RT	647.63
Y50	63+85.42	37.12 RT	4402+41.44	26.74 RT	647.74
Y51	63+88.98	38.11 RT	4402+46.53	27.01 RT	647.84
Y52	63+92.51	39.27 RT	4402+51.69	27.26 RT	647.94
Y53	63+95.94	40.90 RT	4402+56.93	27.78 RT	648.04
Y54	63+99.00	43.48 RT	4402+62.28	29.12 RT	648.15

*STATIONS MEASURED ALONG EXISTING BASELINE
**STATIONS MEASURED ALONG PROPOSED ALIGNMENT
***STATIONS MEASURED ALONG PROPOSED BASELINE

P:\1501-630_W07_CumberlandCircle\CADD_Sheets\D162B16-sht-238-intersec08.dgn

USER NAME = Kendrabant	DESIGNED - MAA	REVISED - 12/01/2017	STATE OF ILLINOIS DEPARTMENT OF TRANSPORTATION
	DRAWN - MAA	REVISED -	
PLOT SCALE = 20.0000 ' / in.	CHECKED - JMG	REVISED -	
PLOT DATE = 12/1/2017	DATE - 10/17/2017	REVISED -	

SPLITTER ISLAND AND EDGE OF PAVEMENT DETAILS
GOLF ROAD SOUTH WEST

SCALE: SHEET 7 OF 9 SHEETS STA. TO STA.

F.A.P. RTE.	SECTION	COUNTY	TOTAL SHEETS	SHEET NO.
339	583-R	COOK	186	120

CONTRACT NO. 62B16

ILLINOIS FED. AID PROJECT

PAVEMENT LAYOUT SCHEDULE

POINT	*STATION	OFFSET	**STATION	ELEVATION
B' 1	62+40.00	9.17 LT	501+90.01	648.79
B' 2	62+45.00	9.17 LT	501+95.01	648.72
B' 3	62+50.00	9.17 LT	502+00.01	648.66
B' 4	62+55.00	9.17 LT	502+05.01	648.60
B' 5	62+60.00	9.17 LT	502+10.01	648.55
B' 6	62+65.00	9.17 LT	502+15.01	648.50
B' 7	62+70.00	9.16 LT	502+20.01	648.45
B' 8	62+75.00	9.16 LT	502+25.01	648.41
B' 9	62+80.00	9.16 LT	502+30.01	648.37
B' 10	62+85.00	9.16 LT	502+35.01	648.34
B' 11	62+90.00	9.16 LT	502+40.01	648.31
B' 12	62+95.00	9.17 LT	502+45.01	648.28
B' 13	63+00.00	9.24 LT	502+50.01	648.26
B' 14	63+05.00	9.37 LT	502+55.02	648.24
B' 15	63+10.00	9.55 LT	502+60.02	648.22
B' 16	63+15.00	9.79 LT	502+65.03	648.21
B' 17	63+20.00	10.08 LT	502+70.03	648.21
B' 18	63+25.00	10.43 LT	502+75.05	648.20
B' 19	63+30.00	10.84 LT	502+80.06	648.20
B' 20	63+35.00	11.30 LT	502+85.08	648.21
B' 21	63+40.00	11.81 LT	502+90.11	648.22
B' 22	63+45.00	12.39 LT	502+95.14	648.23
B' 23	63+50.00	13.02 LT	503+00.18	648.25
B' 24	63+55.00	13.71 LT	503+05.23	648.27
B' 25	63+60.00	14.48 LT	503+10.29	648.29
B' 26	63+65.00	15.40 LT	503+15.37	648.32
B' 27	63+70.00	16.48 LT	503+20.49	648.36
B' 28	63+75.00	17.72 LT	503+25.64	648.39
B' 29	63+80.00	19.14 LT	503+30.84	648.44
B' 30	63+85.00	20.71 LT	503+36.08	648.48
B' 31	63+90.00	22.47 LT	503+41.38	648.54
B' 32	63+95.00	24.41 LT	503+46.74	648.59
B' 33	64+00.00	26.50 LT	503+52.16	648.66
B' 34	64+05.00	28.61 LT	503+57.59	648.73
B' 35	64+10.00	30.72 LT	503+63.02	648.80
B' 36	64+15.00	32.83 LT	503+68.44	648.86
B' 37	64+20.00	34.94 LT	503+73.87	648.93
B' 38	64+25.00	37.05 LT	503+79.30	649.00
B' 39	64+30.00	36.68 LT	503+84.84	649.07
B' 40	64+35.00	34.06 LT	503+90.49	649.14

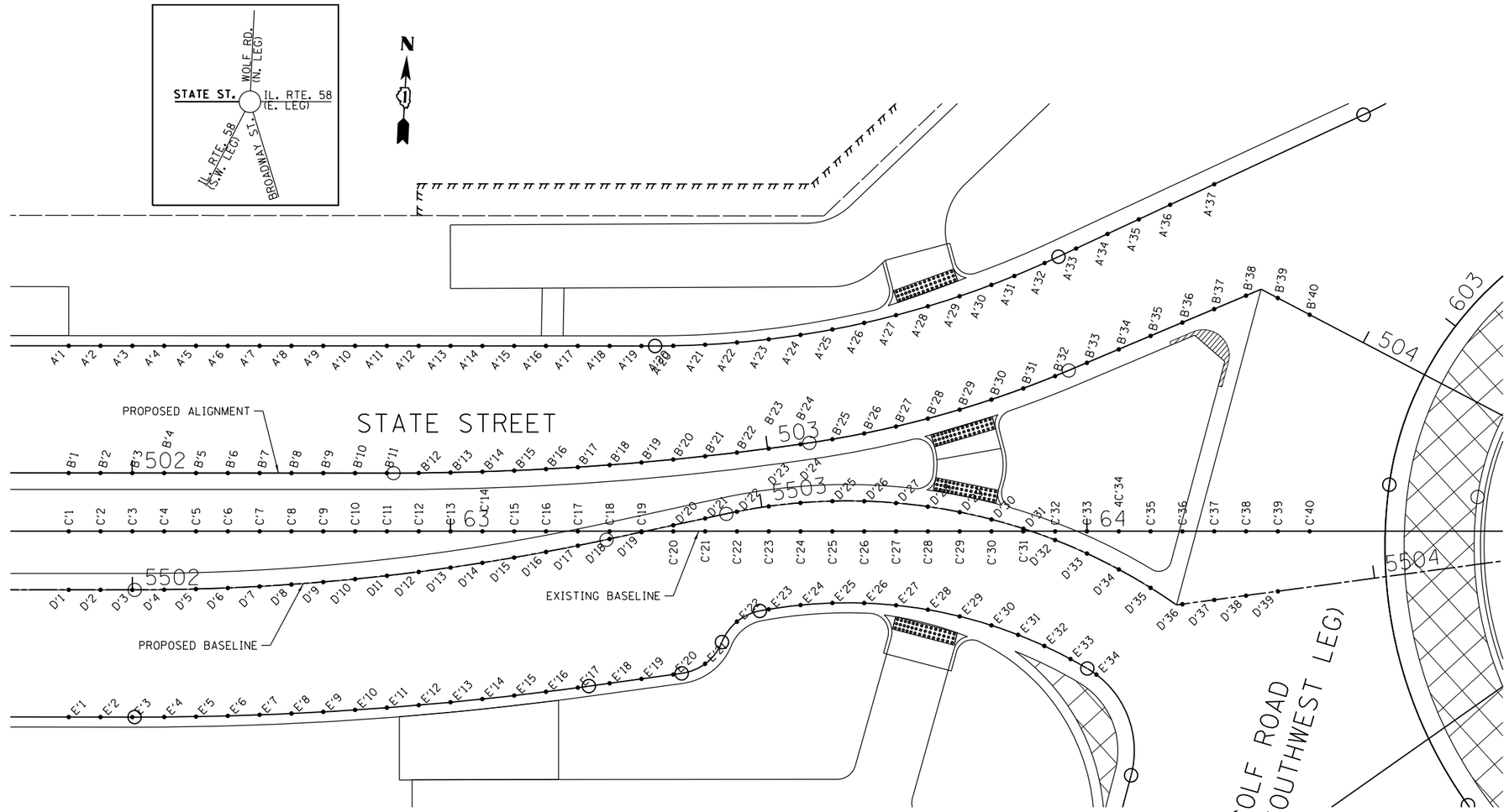

PAVEMENT LAYOUT SCHEDULE

POINT	*STATION	NORTHING	EASTING
C' 1	62+40.00	1,962,433.64	1,098,889.91
C' 2	62+45.00	1,962,433.89	1,098,894.91
C' 3	62+50.00	1,962,434.14	1,098,899.90
C' 4	62+55.00	1,962,434.39	1,098,904.89
C' 5	62+60.00	1,962,434.64	1,098,909.89
C' 6	62+65.00	1,962,434.89	1,098,914.88
C' 7	62+70.00	1,962,435.14	1,098,919.88
C' 8	62+75.00	1,962,435.39	1,098,924.87
C' 9	62+80.00	1,962,435.64	1,098,929.86
C' 10	62+85.00	1,962,435.89	1,098,934.86
C' 11	62+90.00	1,962,436.14	1,098,939.85
C' 12	62+95.00	1,962,436.39	1,098,944.85
C' 13	63+00.00	1,962,436.64	1,098,949.84
C' 14	63+05.00	1,962,436.88	1,098,954.83
C' 15	63+10.00	1,962,437.13	1,098,959.83
C' 16	63+15.00	1,962,437.38	1,098,964.82
C' 17	63+20.00	1,962,437.63	1,098,969.81
C' 18	63+25.00	1,962,437.88	1,098,974.81
C' 19	63+30.00	1,962,438.13	1,098,979.80
C' 20	63+35.00	1,962,438.38	1,098,984.80

PAVEMENT LAYOUT SCHEDULE

POINT	*STATION	NORTHING	EASTING
C' 21	63+40.00	1,962,438.63	1,098,989.79
C' 22	63+45.00	1,962,438.88	1,098,994.78
C' 23	63+50.00	1,962,439.13	1,098,999.78
C' 24	63+55.00	1,962,439.38	1,099,004.77
C' 25	63+60.00	1,962,439.63	1,099,009.76
C' 26	63+65.00	1,962,439.88	1,099,014.76
C' 27	63+70.00	1,962,440.13	1,099,019.75
C' 28	63+75.00	1,962,440.37	1,099,024.75
C' 29	63+80.00	1,962,440.62	1,099,029.74
C' 30	63+85.00	1,962,440.87	1,099,034.73
C' 31	63+90.00	1,962,441.12	1,099,039.73
C' 32	63+95.00	1,962,441.37	1,099,044.72
C' 33	64+00.00	1,962,441.62	1,099,049.71
C' 34	64+05.00	1,962,441.87	1,099,054.71
C' 35	64+10.00	1,962,442.12	1,099,059.70
C' 36	64+15.00	1,962,442.37	1,099,064.70
C' 37	64+20.00	1,962,442.62	1,099,069.69
C' 38	64+25.00	1,962,442.87	1,099,074.68
C' 39	64+30.00	1,962,443.12	1,099,079.68
C' 40	64+35.00	1,962,443.37	1,099,084.67

PAVEMENT LAYOUT SCHEDULE

POINT	*STATION	OFFSET	***STATION	ELEVATION
D' 1	62+40.00	9.19 RT	5501+89.99	648.85
D' 2	62+45.00	9.19 RT	5501+94.99	648.78
D' 3	62+50.00	9.20 RT	5501+99.99	648.71
D' 4	62+55.00	9.17 RT	5502+04.99	648.65
D' 5	62+60.00	9.07 RT	5502+09.99	648.59
D' 6	62+65.00	8.90 RT	5502+15.00	648.54
D' 7	62+70.00	8.66 RT	5502+20.00	648.49
D' 8	62+75.00	8.35 RT	5502+25.01	648.44
D' 9	62+80.00	7.96 RT	5502+30.03	648.40
D' 10	62+85.00	7.51 RT	5502+35.05	648.36
D' 11	62+90.00	6.98 RT	5502+40.08	648.32
D' 12	62+95.00	6.38 RT	5502+45.11	648.29
D' 13	63+00.00	5.70 RT	5502+50.16	648.27
D' 14	63+05.00	4.95 RT	5502+55.21	648.24
D' 15	63+10.00	4.13 RT	5502+60.28	648.22
D' 16	63+15.00	3.23 RT	5502+65.36	648.21
D' 17	63+20.00	2.26 RT	5502+70.46	648.20
D' 18	63+25.00	1.21 RT	5502+75.56	648.19
D' 19	63+30.00	0.13 RT	5502+80.68	648.19
D' 20	63+35.00	0.95 LT	5502+85.80	648.19

PAVEMENT LAYOUT SCHEDULE

POINT	*STATION	OFFSET	***STATION	ELEVATION
D' 21	63+40.00	2.03 LT	5502+90.91	648.19
D' 22	63+45.00	3.09 LT	5502+96.02	648.20
D' 23	63+50.00	3.93 LT	5503+01.09	648.21
D' 24	63+55.00	4.48 LT	5503+06.12	648.23
D' 25	63+60.00	4.75 LT	5503+11.13	648.25
D' 26	63+65.00	4.74 LT	5503+16.13	648.28
D' 27	63+70.00	4.45 LT	5503+21.14	648.30
D' 28	63+75.00	3.88 LT	5503+26.17	648.34
D' 29	63+80.00	3.03 LT	5503+31.25	648.37
D' 30	63+85.00	1.88 LT	5503+36.38	648.41
D' 31	63+90.00	0.42 LT	5503+41.59	648.46
D' 32	63+95.00	1.36 RT	5503+46.89	648.51
D' 33	64+00.00	3.48 RT	5503+52.33	648.57
D' 34	64+05.00	5.98 RT	5503+57.92	648.63
D' 35	64+10.00	8.88 RT	5503+63.70	648.69
D' 36	64+15.00	11.46 RT	5503+69.52	648.75
D' 37	64+20.00	10.78 RT	5503+74.57	648.83
D' 38	64+25.00	10.11 RT	5503+79.61	648.91
D' 39	64+30.00	9.43 RT	5503+84.66	648.98

*STATIONS MEASURED ALONG EXISTING BASELINE
**STATIONS MEASURED ALONG PROPOSED ALIGNMENT
***STATIONS MEASURED ALONG PROPOSED BASELINE

P:\1501-630 W07 Cumberland-Clarke\CADD Sheets\D162B16-sht-239-intersec09_state.dgn

HBM ENGINEERING GROUP, LLC

USER NAME = Kendrabant	DESIGNED - MAA	REVISED - 12/01/2017	
	DRAWN - MAA	REVISED -	
PLOT SCALE = 20.0000 ' / in.	CHECKED - JMG	REVISED -	
PLOT DATE = 12/1/2017	DATE - 10/17/2017	REVISED -	

STATE OF ILLINOIS
DEPARTMENT OF TRANSPORTATION

SPLITTER ISLAND AND EDGE OF PAVEMENT DETAILS
STATE STREET

SCALE: SHEET 8 OF 9 SHEETS STA. TO STA.

F.A.P. RTE.	SECTION	COUNTY	TOTAL SHEETS	SHEET NO.
339	583-R	COOK	186	121

CONTRACT NO. 62B16
ILLINOIS FED. AID PROJECT

PAVEMENT LAYOUT SCHEDULE
STATE STREET

POINT	*STATION	OFFSET	**STATION	OFFSET	ELEVATION
A' 1	62+40.00	29.17 LT	501+90.00	20.00 LT	648.39
A' 2	62+45.00	29.17 LT	501+95.00	20.00 LT	648.32
A' 3	62+50.00	29.17 LT	502+00.00	20.00 LT	648.26
A' 4	62+55.00	29.17 LT	502+05.00	20.00 LT	648.20
A' 5	62+60.00	29.17 LT	502+10.00	20.00 LT	648.15
A' 6	62+65.00	29.17 LT	502+15.00	20.00 LT	648.10
A' 7	62+70.00	29.16 LT	502+20.00	20.00 LT	648.05
A' 8	62+75.00	29.16 LT	502+25.00	20.00 LT	648.01
A' 9	62+80.00	29.16 LT	502+30.00	20.00 LT	647.97
A' 10	62+85.00	29.16 LT	502+35.00	20.00 LT	647.94
A' 11	62+90.00	29.16 LT	502+40.00	20.00 LT	647.91
A' 12	62+95.00	29.16 LT	502+45.19	19.98 LT	647.88
A' 13	63+00.00	29.15 LT	502+50.42	19.91 LT	647.85
A' 14	63+05.00	29.15 LT	502+55.65	19.77 LT	647.84
A' 15	63+10.00	29.15 LT	502+60.87	19.58 LT	647.83
A' 16	63+15.00	29.15 LT	502+66.09	19.33 LT	647.82
A' 17	63+20.00	29.15 LT	502+71.30	19.03 LT	647.82
A' 18	63+25.00	29.15 LT	502+76.51	18.66 LT	647.83
A' 19	63+30.00	29.15 LT	502+81.70	18.24 LT	647.84
A' 20	63+35.00	29.17 LT	502+86.89	17.79 LT	647.85
A' 21	63+40.00	29.35 LT	502+92.09	17.43 LT	647.87
A' 22	63+45.00	29.69 LT	502+97.30	17.18 LT	647.90
A' 23	63+50.00	30.21 LT	503+02.52	17.03 LT	647.92
A' 24	63+55.00	30.89 LT	503+07.84	17.00 LT	647.94
A' 25	63+60.00	31.75 LT	503+13.50	17.00 LT	647.97
A' 26	63+65.00	32.78 LT	503+19.17	17.00 LT	648.01
A' 27	63+70.00	33.99 LT	503+24.91	17.00 LT	648.05
A' 28	63+75.00	35.38 LT	503+30.69	17.00 LT	648.09
A' 29	63+80.00	36.97 LT	503+36.52	17.00 LT	648.15
A' 30	63+85.00	38.75 LT	503+42.43	17.00 LT	648.21
A' 31	63+88.60	40.16 LT	503+46.74	17.00 LT	648.30
A' 32	63+93.35	42.18 LT	503+52.13	17.03 LT	648.38
A' 33	63+98.30	44.47 LT	503+57.58	17.21 LT	648.47
A' 34	64+03.23	46.76 LT	503+63.02	17.41 LT	648.56
A' 35	64+08.15	49.05 LT	503+68.44	17.61 LT	648.65
A' 36	64+13.07	51.35 LT	503+73.87	17.81 LT	648.73
A' 37	64+20.00	54.57 LT	503+81.51	18.09 LT	648.82

PAVEMENT LAYOUT SCHEDULE
STATE STREET

POINT	*STATION	OFFSET	***STATION	OFFSET	ELEVATION
E' 1	62+40.00	29.19 RT	5501+90.01	20.00 RT	648.45
E' 2	62+45.00	29.19 RT	5501+95.01	20.00 RT	648.38
E' 3	62+50.00	29.20 RT	5502+00.01	20.00 RT	648.31
E' 4	62+55.00	29.18 RT	5502+04.76	20.01 RT	648.25
E' 5	62+60.00	29.12 RT	5502+09.49	20.04 RT	648.20
E' 6	62+65.00	29.00 RT	5502+14.22	20.08 RT	648.15
E' 7	62+70.00	28.84 RT	5502+18.95	20.15 RT	648.10
E' 8	62+75.00	28.63 RT	5502+23.68	20.24 RT	648.05
E' 9	62+80.00	28.38 RT	5502+28.41	20.34 RT	648.00
E' 10	62+85.00	28.07 RT	5502+33.14	20.47 RT	647.96
E' 11	62+90.00	27.72 RT	5502+37.87	20.61 RT	647.93
E' 12	62+95.00	27.31 RT	5502+42.61	20.78 RT	647.89
E' 13	63+00.00	26.86 RT	5502+47.34	20.96 RT	647.86
E' 14	63+05.00	26.36 RT	5502+52.08	21.17 RT	647.84
E' 15	63+10.00	25.81 RT	5502+56.82	21.39 RT	647.81
E' 16	63+15.00	25.21 RT	5502+61.55	21.63 RT	647.79
E' 17	63+20.00	24.57 RT	5502+66.29	21.89 RT	647.77
E' 18	63+25.00	23.88 RT	5502+71.03	22.19 RT	647.76
E' 19	63+30.00	23.19 RT	5502+75.81	22.54 RT	647.74
E' 20	63+35.00	22.50 RT	5502+80.84	22.93 RT	647.73
E' 21	63+40.00	20.82 RT	5502+86.08	22.34 RT	647.74
E' 22	63+45.00	14.18 RT	5502+92.38	16.91 RT	647.85
E' 23	63+50.00	12.25 RT	5502+98.40	16.00 RT	647.89
E' 24	63+55.00	11.59 RT	5503+04.53	16.00 RT	647.91
E' 25	63+60.00	11.26 RT	5503+10.62	16.00 RT	647.93
E' 26	63+65.00	11.27 RT	5503+16.70	16.00 RT	647.96
E' 27	63+70.00	11.62 RT	5503+22.81	16.00 RT	647.99
E' 28	63+75.00	12.31 RT	5503+28.95	16.00 RT	648.04
E' 29	63+80.00	13.36 RT	5503+35.17	16.00 RT	648.08
E' 30	63+85.00	14.78 RT	5503+41.48	16.00 RT.	648.14
E' 31	63+89.19	16.27 RT	5503+46.89	16.00 RT.	648.19
E' 32	63+93.30	18.02 RT	5503+52.32	16.00 RT.	648.29
E' 33	63+97.42	20.07 RT	5503+57.92	16.00 RT.	648.38
E' 34	64+01.49	22.52 RT	5503+63.70	16.07 RT.	648.48

*STATIONS MEASURED ALONG EXISTING BASELINE
**STATIONS MEASURED ALONG PROPOSED ALIGNMENT
***STATIONS MEASURED ALONG PROPOSED BASELINE

PAVEMENT LAYOUT SCHEDULE
BROADWAY STREET

POINT	*STATION	NORTHING	EASTING
N1	50+90.00	1,962,361.87	1,099,179.92
N2	50+95.00	1,962,357.16	1,099,181.61
N3	51+00.00	1,962,352.46	1,099,183.29
N4	51+05.00	1,962,347.75	1,099,184.98
N5	51+10.00	1,962,343.04	1,099,186.66
N6	51+15.00	1,962,338.33	1,099,188.35
N7	51+20.00	1,962,333.63	1,099,190.03
N8	51+25.00	1,962,328.92	1,099,191.72
N9	51+30.00	1,962,324.21	1,099,193.40
N10	51+35.00	1,962,319.50	1,099,195.09
N11	51+40.00	1,962,314.80	1,099,196.77
N12	51+45.00	1,962,310.09	1,099,198.46
N13	51+50.00	1,962,305.38	1,099,200.14
N14	51+55.00	1,962,300.67	1,099,201.83
N15	51+60.00	1,962,295.97	1,099,203.51
N16	51+65.00	1,962,291.26	1,099,205.20
N17	51+70.00	1,962,286.55	1,099,206.88
N18	51+75.00	1,962,281.84	1,099,208.57
N19	51+80.00	1,962,277.14	1,099,210.25
N20	51+85.00	1,962,272.43	1,099,211.94
N21	51+90.00	1,962,267.72	1,099,213.62
N22	51+95.00	1,962,263.01	1,099,215.31
N23	52+00.00	1,962,258.31	1,099,216.99
N24	52+05.00	1,962,253.60	1,099,218.68
N25	52+10.00	1,962,248.89	1,099,220.37
N26	52+15.00	1,962,244.19	1,099,222.05
N27	52+20.00	1,962,239.48	1,099,223.74
N28	52+25.00	1,962,234.77	1,099,225.42

PAVEMENT LAYOUT SCHEDULE
BROADWAY STREET

POINT	*STATION	OFFSET	***STATION	ELEVATION
P1	50+90.00	14.56 LT	3305+12.78	
P2	50+95.00	13.71 LT	3305+07.40	
P3	51+00.00	11.10 LT	3305+01.76	
P4	51+05.00	8.87 LT	3304+96.28	
P5	51+10.00	6.99 LT	3304+90.94	
P6	51+15.00	5.44 LT	3304+85.70	648.23
P7	51+20.00	4.20 LT	3304+80.55	648.19
P8	51+25.00	3.26 LT	3304+75.46	648.15
P9	51+30.00	2.61 LT	3304+70.42	648.11
P10	51+35.00	2.24 LT	3304+65.41	648.08
P11	51+40.00	2.15 LT	3304+60.41	648.04
P12	51+45.00	2.34 LT	3304+55.40	648.00
P13	51+50.00	2.81 LT	3304+50.38	647.96
P14	51+55.00	3.48 LT	3304+45.33	647.92
P15	51+60.00	4.17 LT	3304+40.29	647.88
P16	51+65.00	4.85 LT	3304+35.24	647.84
P17	51+70.00	5.53 LT	3304+30.19	647.80
P18	51+75.00	6.22 LT	3304+25.15	647.77
P19	51+80.00	6.85 LT	3304+20.11	647.73
P20	51+85.00	7.41 LT	3304+15.08	647.69
P21	51+90.00	7.90 LT	3304+10.05	647.65
P22	51+95.00	8.32 LT	3304+05.03	647.61
P23	52+00.00	8.67 LT	3304+00.02	647.57
P24	52+05.00	8.95 LT	3303+95.01	647.53
P25	52+10.00	9.16 LT	3303+90.01	647.49
P26	52+15.00	9.30 LT	3303+85.01	647.46
P27	52+20.00	9.37 LT	3303+80.01	647.42
P28	52+25.00	9.38 LT	3303+75.01	647.38

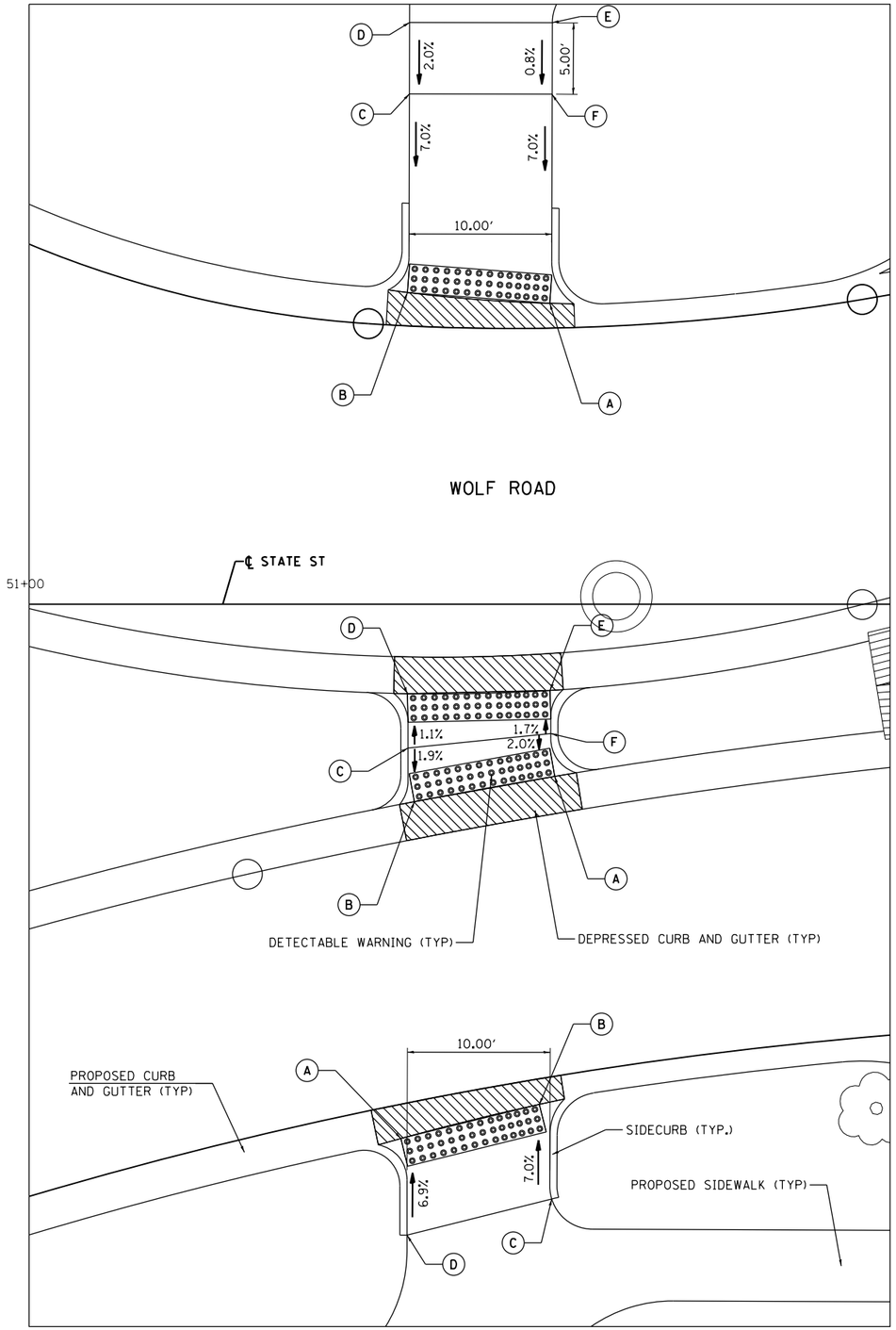

LOCATION – SIDEWALK DETAILS AT WOLF ROAD AND CUMBERLAND CIRCLE

WEST SIDEWALK

(STANDARD 424001)

	POINT	STA	OFFSET	ELEV
*	A	51+36.83	21.08 LT	648.91
*	B	51+26.87	21.83 LT	648.80
	C	51+27.01	35.74 LT	649.77
	D	51+27.02	40.74 LT	649.87
	E	51+37.02	40.72 LT	649.97
	F	51+37.01	35.72 LT	649.93

* MATCH EXISTING ELEVATION

MEDIAN SIDEWALK

(STANDARD 424031)

	POINT	STA	OFFSET	ELEV
*	A	51+37.20	12.05 RT	649.33
*	B	51+27.36	13.82 RT	649.23
	C	51+26.91	10.06 RT	649.30
*	D	51+26.87	6.27 RT	649.26
*	E	51+36.87	6.04 RT	649.34
	F	51+36.92	9.06 RT	649.39

* MATCH EXISTING ELEVATION

EAST SIDEWALK

(STANDARD 424001)

	POINT	STA	OFFSET	ELEV
*	A	51+26.41	37.41 RT	648.84
*	B	51+36.12	35.01 RT	648.95
	C	51+36.98	41.64 RT	649.42
	D	51+26.84	44.18 RT	649.31

* MATCH EXISTING ELEVATION

NOTES

1. ALL STATIONS AND OFFSETS ARE GIVEN TO WITH RESPECT TO EXISTING WOLF ROAD BASELINE.

LEGEND

PROPOSED DEPRESSED CURB AND GUTTER

P:\1581-638 WO7 CumberlandCircle\CADD Sheets\D162B16-sht-271-intersec28ada.dgn

HBM ENGINEERING GROUP, LLC

USER NAME = Ken.drabant	DESIGNED - SK	REVISED - 12/01/2017	
	DRAWN - SK	REVISED -	
PLOT SCALE = 10.0000 ' / in.	CHECKED - JMG	REVISED -	
PLOT DATE = 12/1/2017	DATE - 10/17/2017	REVISED -	

STATE OF ILLINOIS
DEPARTMENT OF TRANSPORTATION

PROPOSED ADA SIDEWALK DETAILS
WOLF RD

SCALE: | SHEET 1 OF 7 SHEETS | STA. TO STA.

F.A.P. RTE.	SECTION	COUNTY	TOTAL SHEETS	SHEET NO.
339	583-R	COOK	186	123

CONTRACT NO. 62B16

ILLINOIS FED. AID PROJECT

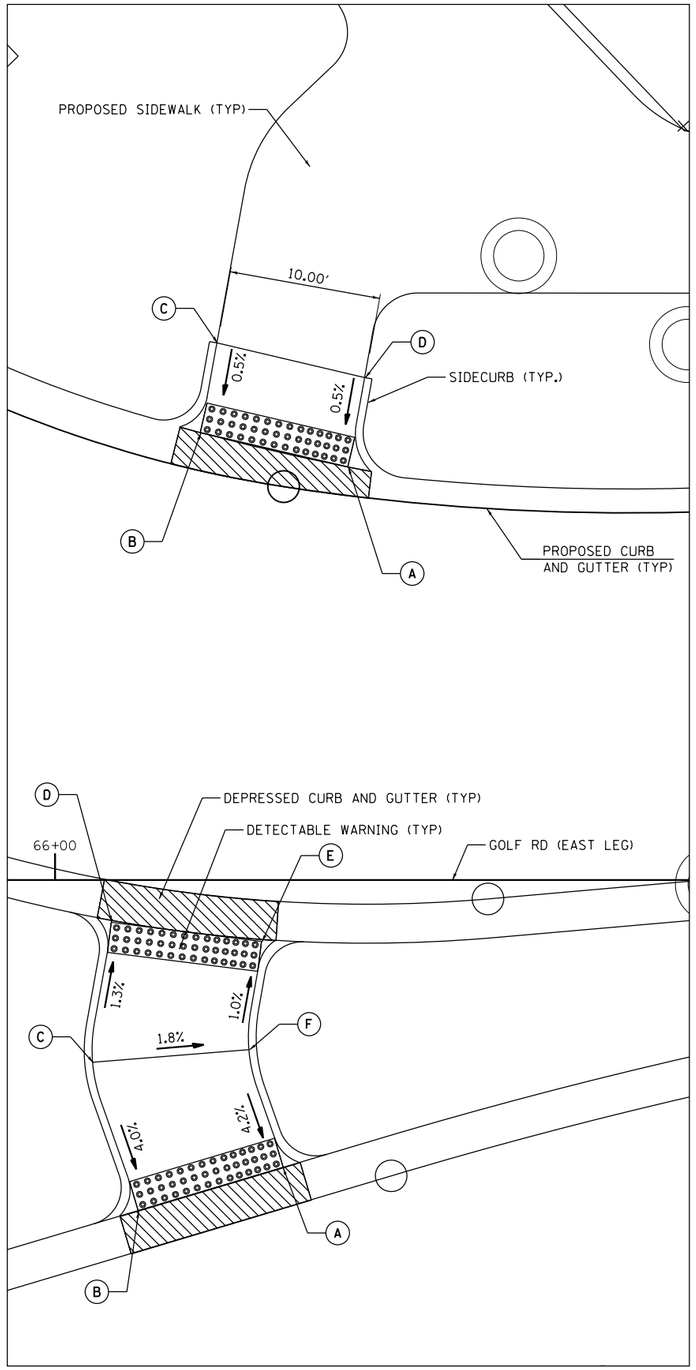

LOCATION – SIDEWALK DETAILS AT GOLF ROAD AND CUMBERLAND CIRCLE

N

NORTH SIDEWALK

(STANDARD 424001)

	POINT	STA	OFFSET	ELEV
*	A	66+19.32	27.28 LT	647.91
*	B	66+09.58	29.54 LT	648.11
	C	66+10.68	35.45 LT	648.14
	D	66+20.43	33.17 LT	647.94

* MATCH EXISTING ELEVATION

MEDIAN SIDEWALK

(STANDARD 424031)

	POINT	STA	OFFSET	ELEV
*	A	66+15.06	18.96 RT	648.23
*	B	66+05.48	21.82 RT	648.38
	C	66+02.48	12.03 RT	648.79
*	D	66+03.71	2.79 RT	648.67
*	E	66+13.63	4.05 RT	648.50
	F	66+12.79	11.19 RT	648.57

* MATCH EXISTING ELEVATION

NOTES

1. ALL STATIONS AND OFFSETS ARE GIVEN TO WITH RESPECT TO EXISTING GOLF ROAD BASELINE.

LEGEND

PROPOSED DEPRESSED CURB AND GUTTER

SOUTH SIDEWALK

(STANDARD 424001)

	POINT	STA	OFFSET	ELEV
*	A	66+24.66	45.80 RT	647.73
*	B	66+15.40	49.57 RT	647.87
	C	66+17.11	55.38 RT	647.90
	D	66+26.85	52.38 RT	647.77

* MATCH EXISTING ELEVATION

N

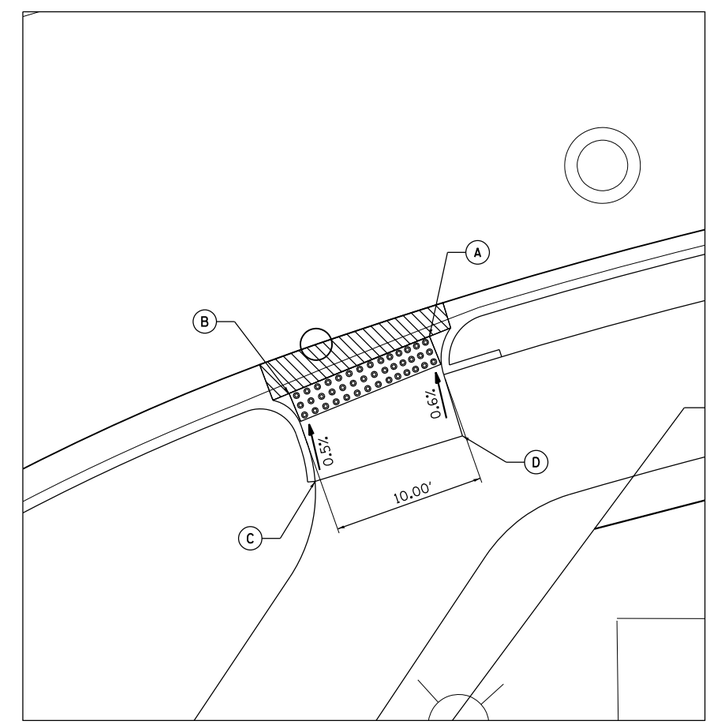

LOCATION – SIDEWALK DETAILS AT SOUTH END OF GOLF ROAD AND CUMBERLAND CIRCLE

P:\501-630 W07 CumberlandCircle\CADD Sheets\D162B16-sht-272-intersec21ada.dgn

HBM ENGINEERING GROUP, LLC

USER NAME = Kendrabant	DESIGNED - SK	REVISED - 12/01/2017	
	DRAWN - SK	REVISED -	
PLOT SCALE = 10.0000 ' / in.	CHECKED - JMG	REVISED -	
PLOT DATE = 12/1/2017	DATE - 10/17/2017	REVISED -	

STATE OF ILLINOIS
DEPARTMENT OF TRANSPORTATION

PROPOSED ADA SIDEWALK DETAILS
GOLF RD (EAST LEG)

SCALE: | SHEET 2 OF 7 SHEETS | STA. TO STA.

F.A.P. RTE.	SECTION	COUNTY	TOTAL SHEETS	SHEET NO.
339	583-R	COOK	186	124

CONTRACT NO. 62B16

ILLINOIS FED. AID PROJECT

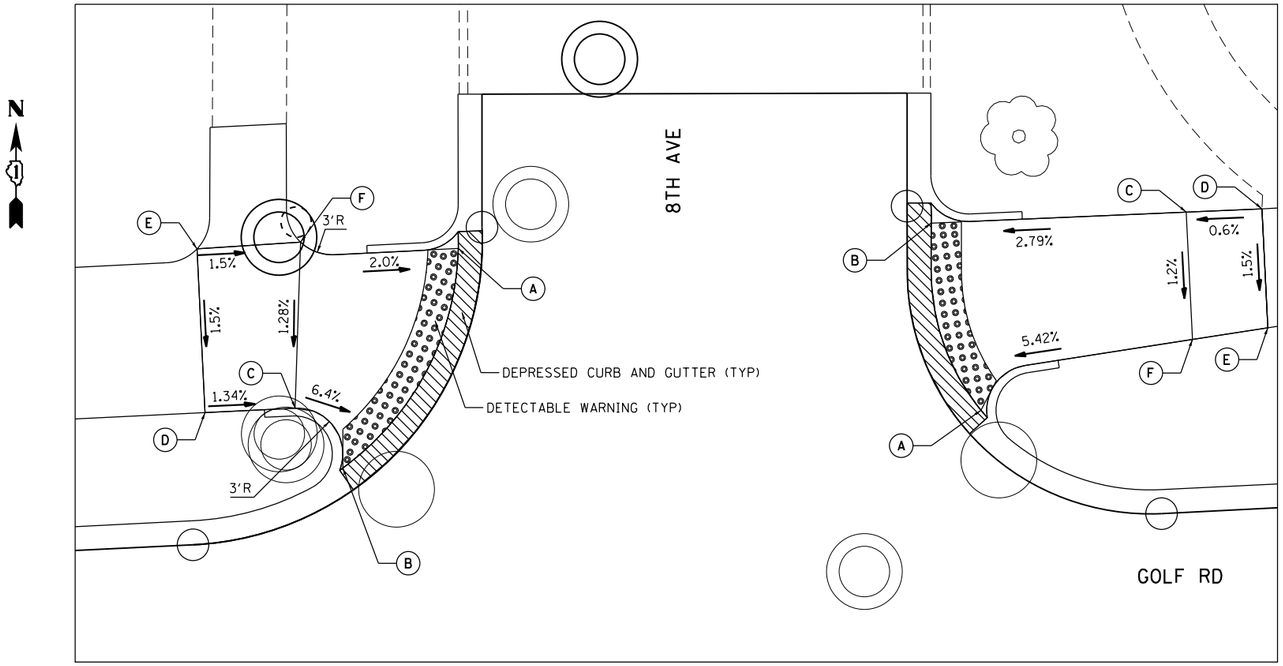

LOCATION – SIDEWALK DETAILS AT GOLF ROAD AND N 8TH AVE

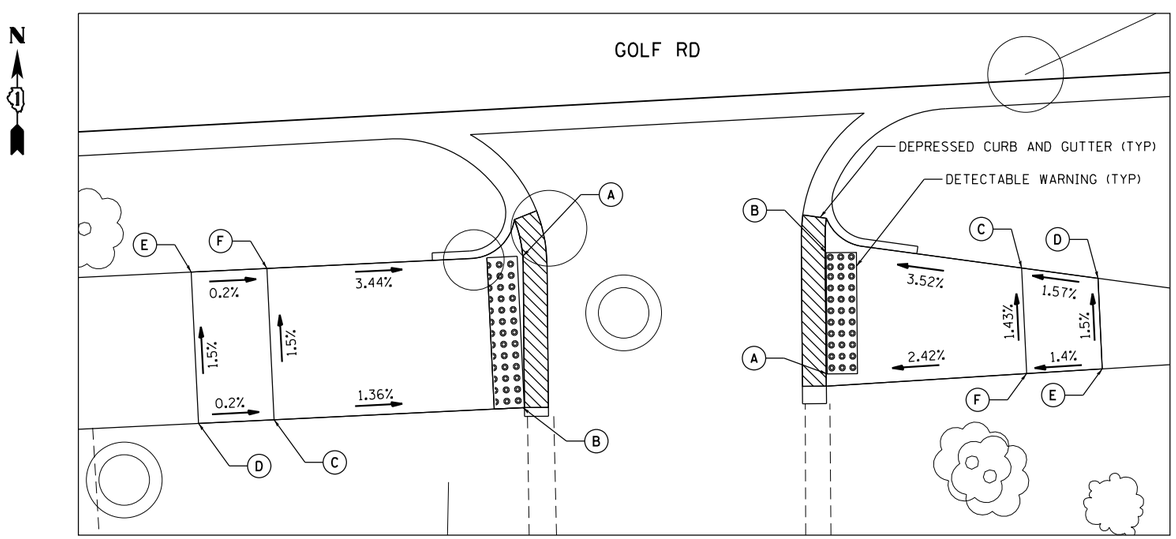

LOCATION – SIDEWALK DETAILS AT GOLF ROAD AND ALLEY

NORTHWEST SIDEWALK

(STANDARD 424001)

	POINT	STA	OFFSET	ELEV
*	A	68+18.49	49.78' LT	646.55
*	B	68+09.90	34.44' LT	646.25
	C	68+07.16	38.67' LT	646.62
	D	68+01.20	38.67' LT	646.70
	E	68+01.21	49.49' LT	646.86
	F	68+08.06	49.60' LT	646.76

* MATCH EXISTING ELEVATION

NORTHEAST SIDEWALK

(STANDARD 424001)

	POINT	STA	OFFSET	ELEV
*	A	68+52.77	35.80' LT	646.09
*	B	68+49.76	50.13' LT	646.56
	C	68+66.55	48.71' LT	647.03
*	D	68+71.55	48.68' LT	647.06
	E	68+71.55	40.82' LT	646.94
	F	68+66.55	49.29' LT	646.93

* MATCH EXISTING ELEVATION

SOUTHWEST SIDEWALK

(STANDARD 424001)

	POINT	STA	OFFSET	ELEV
*	A	67+96.37	36.92' RT	646.93
*	B	67+96.43	49.35' RT	647.43
	C	67+79.89	49.33' RT	647.65
	D	67+74.89	49.33' RT	647.66
	E	67+74.90	39.33' RT	647.51
	F	67+79.90	39.33' RT	647.50

* MATCH EXISTING ELEVATION

SOUTHEAST SIDEWALK

(STANDARD 424001)

	POINT	STA	OFFSET	ELEV
*	A	68+16.41	48.92' RT	647.13
*	B	68+16.95	37.84' RT	646.89
	C	68+29.67	41.76' RT	647.35
	D	68+34.67	42.69' RT	647.43
	E	68+34.65	48.67' RT	647.52
	F	68+29.65	48.74' RT	647.45

* MATCH EXISTING ELEVATION

NOTES

1. ALL STATIONS AND OFFSETS ARE GIVEN TO WITH RESPECT TO EXISTING GOLF ROAD BASELINE.

LEGEND

PROPOSED DEPRESSED CURB AND GUTTER

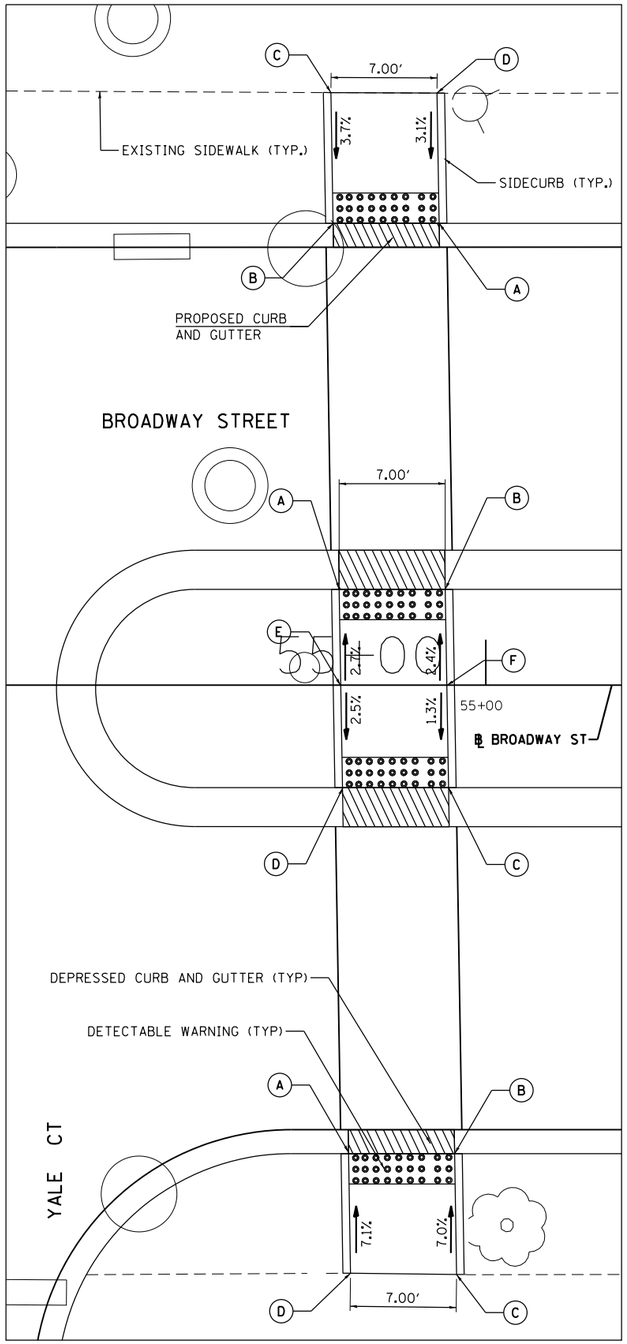

LOCATION – SIDEWALK DETAILS AT BROADWAY STREET AND YALE CT

WEST SIDEWALK

(STANDARD 424001)

	POINT	STA	OFFSET	ELEV
*	A	55+03.90	30.50 RT	645.33
*	B	55+10.90	30.50 RT	645.39
*	C	55+10.90	39.14 RT	645.71
*	D	55+03.90	39.10 RT	645.60

* MATCH EXISTING ELEVATION

MEDIAN SIDEWALK

(STANDARD 424031)

	POINT	STA	OFFSET	ELEV
*	A	55+09.69	6.34 RT	646.20
*	B	55+02.69	6.34 RT	646.25
*	C	55+02.48	6.74 LT	646.31
*	D	55+09.48	6.74 LT	646.20
	E	55+09.59	0.00	646.37
	F	55+02.59	0.00	646.40

* MATCH EXISTING ELEVATION

EAST SIDEWALK

(STANDARD 424001)

	POINT	STA	OFFSET	ELEV
*	A	55+09.08	30.90 LT	645.21
*	B	55+02.08	30.90 LT	645.28
*	C	55+01.94	38.88 LT	645.84
*	D	55+08.94	38.79 LT	645.77

* MATCH EXISTING ELEVATION

WEST SIDEWALK

(STANDARD 424001)

	POINT	STA	OFFSET	ELEV
*	A	51+47.19	34.33 RT	647.61
*	B	51+57.02	32.52 RT	647.53
	C	51+57.71	38.15 RT	647.87
	D	51+47.78	39.43 RT	647.97

* MATCH EXISTING ELEVATION

MEDIAN SIDEWALK

(STANDARD 424031)

	POINT	STA	OFFSET	ELEV
*	A	51+55.18	8.20 RT	647.92
*	B	51+45.24	9.34 RT	647.99
*	C	51+44.35	0.28 RT	648.04
*	D	51+54.30	0.78 LT	647.97
	E	51+54.71	3.58 RT	648.10
	F	51+44.78	4.82 RT	648.20

* MATCH EXISTING ELEVATION

EAST SIDEWALK

(STANDARD 424001)

	POINT	STA	OFFSET	ELEV
*	A	51+52.60	18.96 LT	647.70
*	B	51+42.60	18.90 LT	647.77
	C	51+42.20	24.97 LT	647.83
	D	51+52.24	24.96 LT	647.76

* MATCH EXISTING ELEVATION

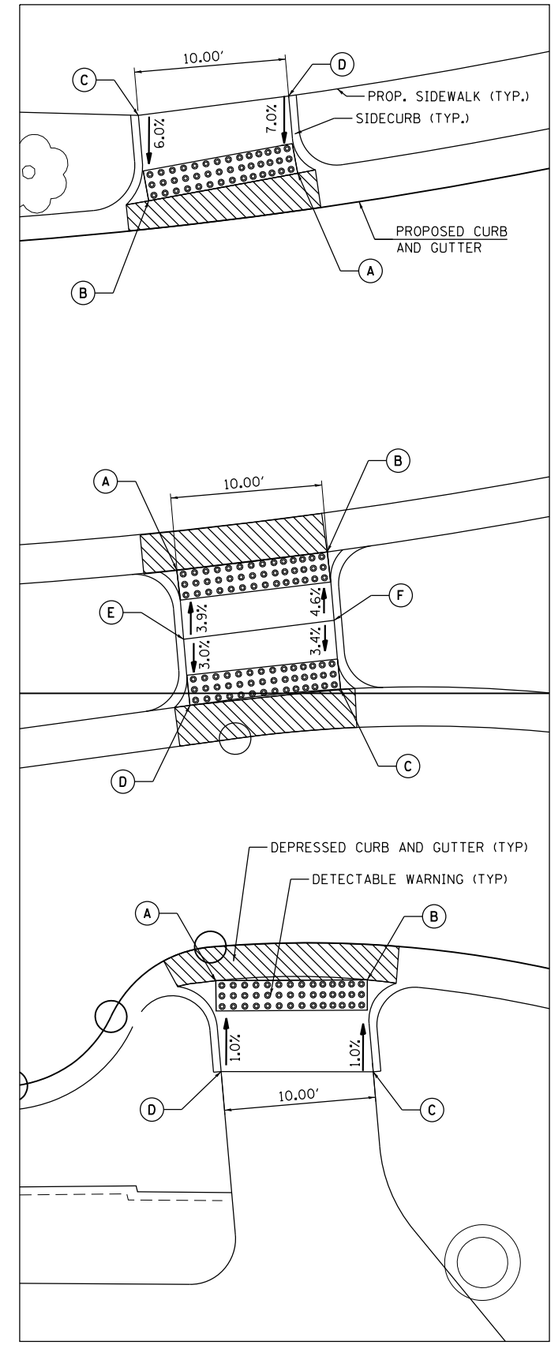

LOCATION – SIDEWALK DETAILS AT BROADWAY STREET AND CUMBERLAND CIRCLE

NOTES

1. ALL STATIONS AND OFFSETS ARE GIVEN TO WITH RESPECT TO EXISTING STATE STREET BASELINE.

LEGEND

PROPOSED DEPRESSED CURB AND GUTTER

P:\1501-630 WO7 Cumberland-Circle\CADD Sheets\D162B16-sht-273-intersec23ada.dgn

HBM ENGINEERING GROUP, LLC	USER NAME = Ken.drabant	DESIGNED - SK	REVISED - 12/01/2017	STATE OF ILLINOIS DEPARTMENT OF TRANSPORTATION	PROPOSED ADA SIDEWALK DETAILS BROADWAY ST	F.A.P. RTE.	SECTION	COUNTY	TOTAL SHEETS	SHEET NO.
		DRAWN - SK	REVISED -			339	583-R	COOK	186	126
	PLOT SCALE = 10.0000 ' / in.	CHECKED - JMG	REVISED -					CONTRACT NO. 62B16		
	PLOT DATE = 12/1/2017	DATE - 10/17/2017	REVISED -		SCALE: SHEET 4 OF 7 SHEETS STA. TO STA.		ILLINOIS FED. AID PROJECT			

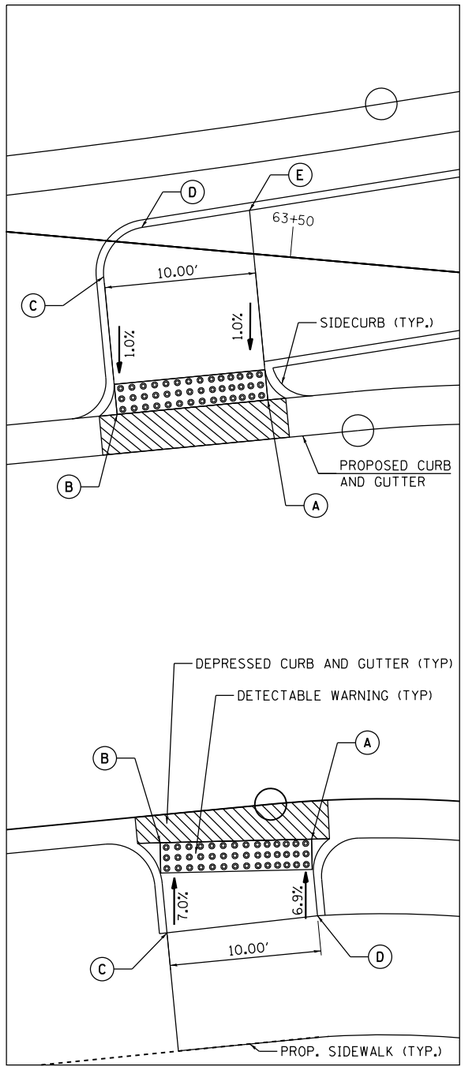

LOCATION – SIDEWALK DETAILS AT GOLF ROAD–SW AND CUMBERLAND CIRCLE

MEDIAN SIDEWALK

(STANDARD 424031)

	POINT	STA	OFFSET	ELEV
*	A	63+49.37	9.52 RT	647.73
*	B	63+39.54	11.36 RT	647.60
	C	63+37.85	2.39 RT	647.69
	D	63+40.07	1.07 LT	647.72
	E	63+47.05	2.83 LT	647.86

* MATCH EXISTING ELEVATION

SOUTHEAST SIDEWALK

(STANDARD 424001)

	POINT	STA	OFFSET	ELEV
*	A	63+54.83	38.13 RT	647.25
*	B	63+44.89	39.27 RT	647.13
	C	63+45.88	45.15 RT	647.55
	D	63+55.68	43.13 RT	647.60

* MATCH EXISTING ELEVATION

NORTHWEST SIDEWALK

(STANDARD 424001)

	POINT	STA	OFFSET	ELEV
*	A	63+95.75	50.03 LT	648.15
*	B	63+86.56	46.09 LT	647.98
	C	63+84.67	51.80 LT	648.40
	D	63+93.85	56.30 LT	648.55

* MATCH EXISTING ELEVATION

MEDIAN SIDEWALK

(STANDARD 424031)

	POINT	STA	OFFSET	ELEV
*	A	64+03.00	20.04 LT	648.48
*	B	63+93.30	17.59 LT	648.37
	C	63+96.48	4.99 LT	648.50
	D	64+03.27	6.70 LT	648.61
	E	64+05.45	10.34 LT	648.58

* MATCH EXISTING ELEVATION

LOCATION – SIDEWALK DETAILS AT GOLF ROAD–SW AND CUMBERLAND CIRCLE

NOTES

1. ALL STATIONS AND OFFSETS ARE GIVEN TO WITH RESPECT TO EXISTING STATE STREET BASELINE.

LEGEND

PROPOSED DEPRESSED CURB AND GUTTER

P:\1581-638 W07 Cumberland-Circle\CADD_Sheets\D162B16-sht-274-intersec24adaa.dgn

HBM ENGINEERING GROUP, LLC	USER NAME = Kendrabant	DESIGNED - SK	REVISED - 12/01/2017	STATE OF ILLINOIS DEPARTMENT OF TRANSPORTATION	PROPOSED ADA SIDEWALK DETAILS GOLF RD (SOUTHWEST LEG)
		DRAWN - SK	REVISED -		
	PLOT SCALE = 10.0000 ' / in.	CHECKED - JMG	REVISED -		
	PLOT DATE = 12/1/2017	DATE - 10/17/2017	REVISED -		SCALE: SHEET 5 OF 7 SHEETS STA. TO STA.

F.A.P. RTE.	SECTION	COUNTY	TOTAL SHEETS	SHEET NO.
339	583-R	COOK	186	127
		CONTRACT NO. 62B16		
		ILLINOIS FED. AID PROJECT		

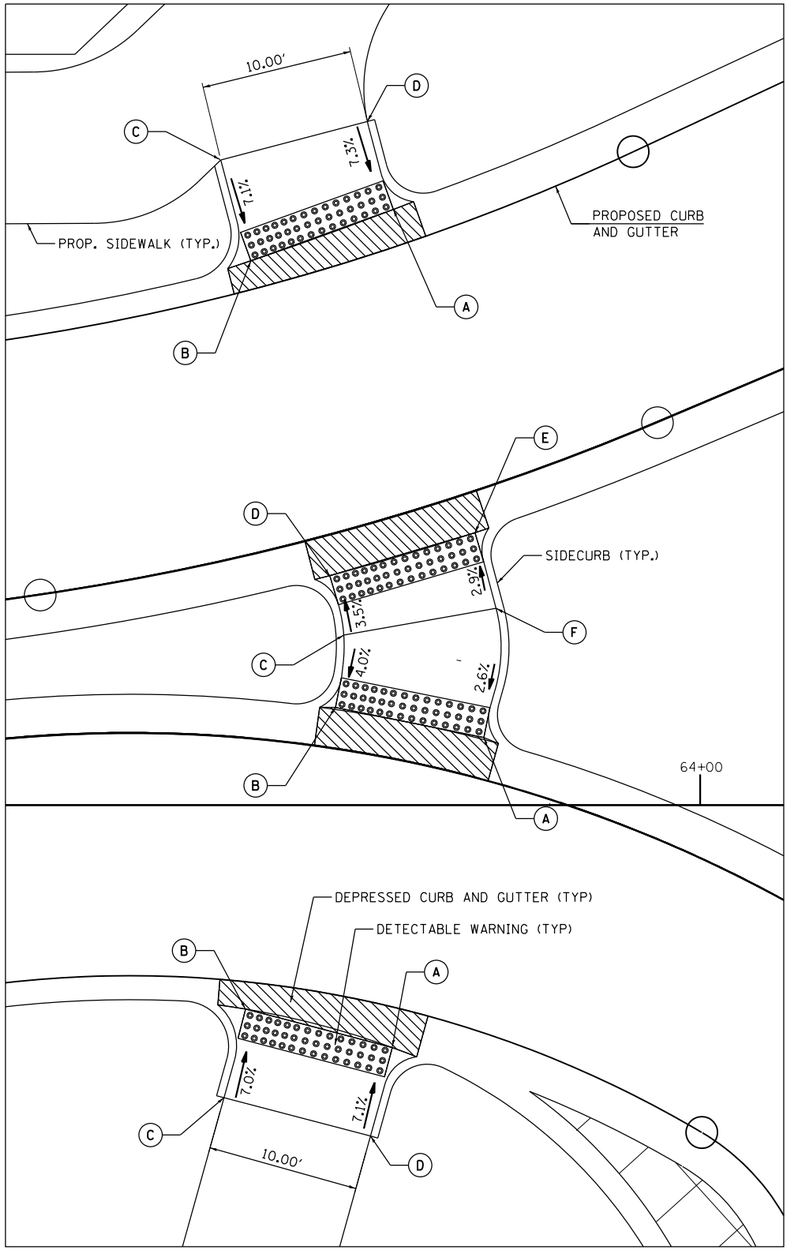

NORTH SIDEWALK

(STANDARD 424001)

	POINT	STA	OFFSET	ELEV
*	A	63+79.70	39.37 LT	648.18
*	B	63+70.29	35.97 LT	648.08
	C	63+68.31	42.62 LT	648.57
	D	63+77.99	45.17 LT	648.62

* MATCH EXISTING ELEVATION

MEDIAN SIDEWALK

(STANDARD 424031)

	POINT	STA	OFFSET	ELEV
*	A	63+85.68	4.51 LT	648.44
*	B	63+75.88	6.49 LT	648.37
	C	63+76.43	11.27 LT	648.56
*	D	63+75.51	15.19 LT	648.42
*	E	63+85.09	18.03 LT	648.51
	F	63+86.48	13.03 LT	648.66

* MATCH EXISTING ELEVATION

SOUTH SIDEWALK

(STANDARD 424001)

	POINT	STA	OFFSET	ELEV
*	A	63+79.62	15.95 RT	648.11
*	B	63+69.95	13.42 RT	648.02
	C	63+68.52	19.27 RT	648.44
	D	63+78.19	21.80 RT	648.54

* MATCH EXISTING ELEVATION

LOCATION – SIDEWALK DETAILS AT STATE STREET AND CUMBERLAND CIRCLE

NOTES

1. ALL STATIONS AND OFFSETS ARE GIVEN TO WITH RESPECT TO EXISTING STATE STREET BASELINE.

LEGEND

PROPOSED DEPRESSED CURB AND GUTTER

LEGEND

- TOP PORTION OF M-6.24 OR TYPE "B" CURB, SEE NOTE 1
- VERTICAL SLOPE PORTION OF M-6.24 OR TYPE "B" CURB
- DEPRESSED CURB

NOTES:

1. THE 2" WIDE TOP AND 6" WIDE SLOPED PORTION OF THE M-6.24 CURB AND GUTTER SHALL TRANSITION TO A 6" WIDE TOP AND 1" SLOPPED PORTION OF CONCRETE CURB TYPE "B" AS INDICATED.
2. TYPICAL TRANSITION SHOWN FOR WOLF RD., OTHER AREAS SIMILAR. SEE ADA RAMPS FOR DETAIL ELEVATIONS, STATIONS AND OFFSETS.

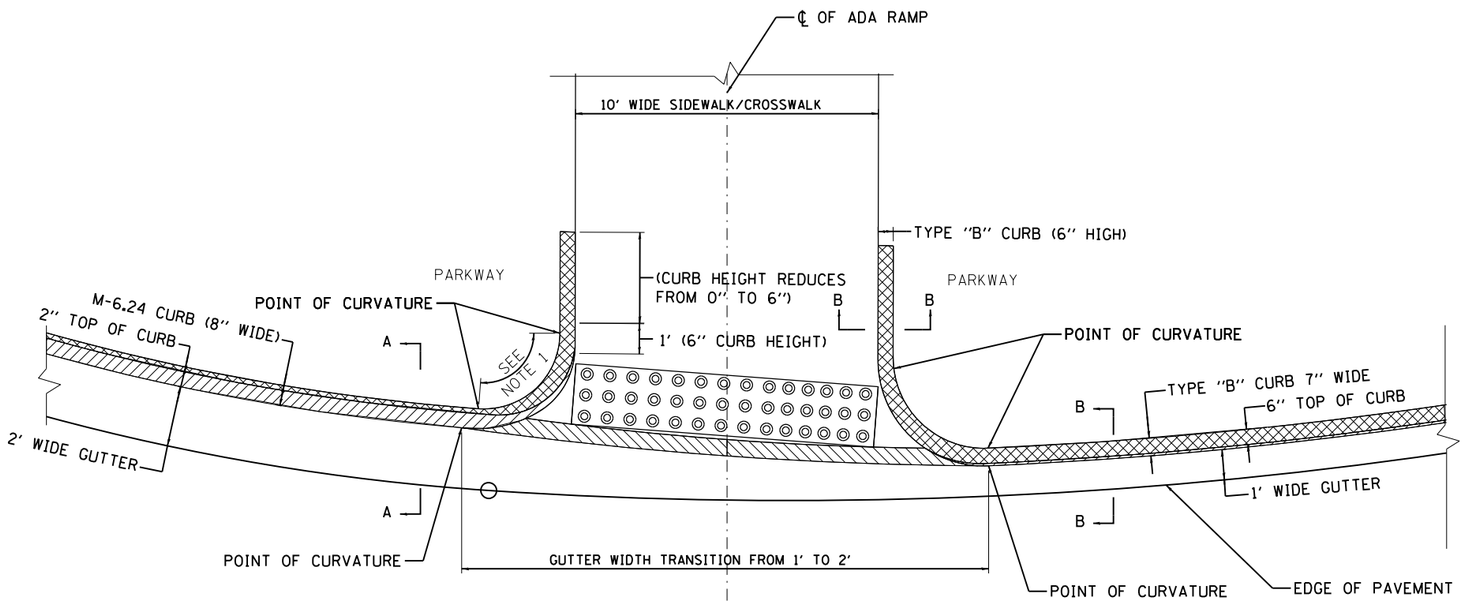

TYPICAL CURB AND GUTTER TRANSITION DETAIL

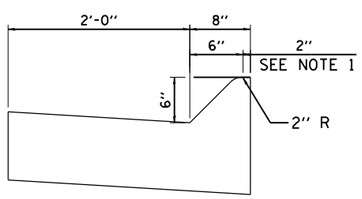

SECTION A–A
M–6.24

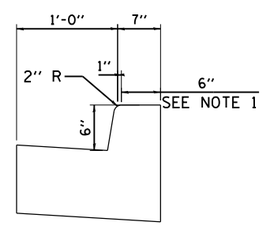

SECTION B–B
B–6.12

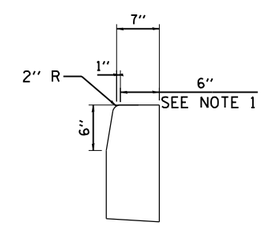

SECTION C–C
TYP "B" CURB

P:\1501-638 W07 CumberlandCircle\CADD\Sheets\D162B16-sht-276-Intersec-Detail.dgn

HBM ENGINEERING GROUP, LLC	USER NAME = Kendrabant	DESIGNED - SK	REVISED - 12/01/2017	STATE OF ILLINOIS DEPARTMENT OF TRANSPORTATION	CURB AND GUTTER TRANSITION DETAIL	F.A.P. RTE.	SECTION	COUNTY	TOTAL SHEETS	SHEET NO.
		DRAWN - SK	REVISED -			339	583-R	COOK	186	129
	PLOT SCALE = 10:0 ':' / in.	CHECKED - JMG	REVISED -					CONTRACT NO. 62B16		
	PLOT DATE = 12/1/2017	DATE - 10/17/2017	REVISED -		SCALE: SHEET 7 OF 7 SHEETS STA. TO STA.		ILLINOIS	FED. AID PROJECT		

LEGEND

1. LETTERS AND SYMBOLS WHITE (8' LETTERS TYP.)
2. 24" WHITE DOTTED LINE (2" DASH, 2" SKIP)
3. 12" YELLOW DIAGONALS
4. 4" DOUBLE YELLOW
5. 6" WHITE DOTTED LINE (2' DASH , 6' SKIP)
6. 4" WHITE DOTTED LINE (10' DASH , 30' SKIP)
7. 4" WHITE
8. 4" YELLOW SOLID LINE
9. 6" WHITE SOLID LINE
10. 8" WHITE SOLID LINE
11. 12" WHITE CHEVRONS

SEEDING, CLASS 2A ROADSIDE MIXTURE
TOPSOIL FURNISH AND PLACE, 4"
NITROGEN, POTASSIUM, PHOSPHORUS FERTILIZER
EROSION CONTROL BLANKET

SODDING, SALT TOLERANT
TOPSOIL FURNISH AND PLACE, 4"
NITROGEN, POTASSIUM, PHOSPHORUS FERTILIZER

TEMPORARY EASEMENT

EX. R.O.W.

WALKWAY MARKINGS (LC 7800)

A'-S7 POINT A', SIGN S7

S1 R6-4a ROUNDABOUT DIRECTIONAL (3 CHEVRONS) 48x24

S2 R1-2 YIELD

S3L W11-2 PEDESTRIAN

S3R W11-2 PEDESTRIAN

M6-2L

M6-2R

S4 W2-6 CIRCULAR INTERSECTION

20 MPH W13-1P ADVISORY SPEED (PLAQUE), SPECIAL

S5E EAST ILLINOIS 58 — M3-2 EAST; M1-I100.2 ILLINOIS STATE ROUTE, 2 DIGITS, SPECIAL; M6-2 45° DIAGONAL ARROW AUXILIARY (RIGHT)

S5W WEST ILLINOIS 58 — M3-2 WEST; M1-I100.2 ILLINOIS STATE ROUTE, 2 DIGITS, SPECIAL; M6-2 45° DIAGONAL ARROW AUXILIARY (RIGHT)

S6 Wolf Rd.

S8 Broadway St.

S7 State St.

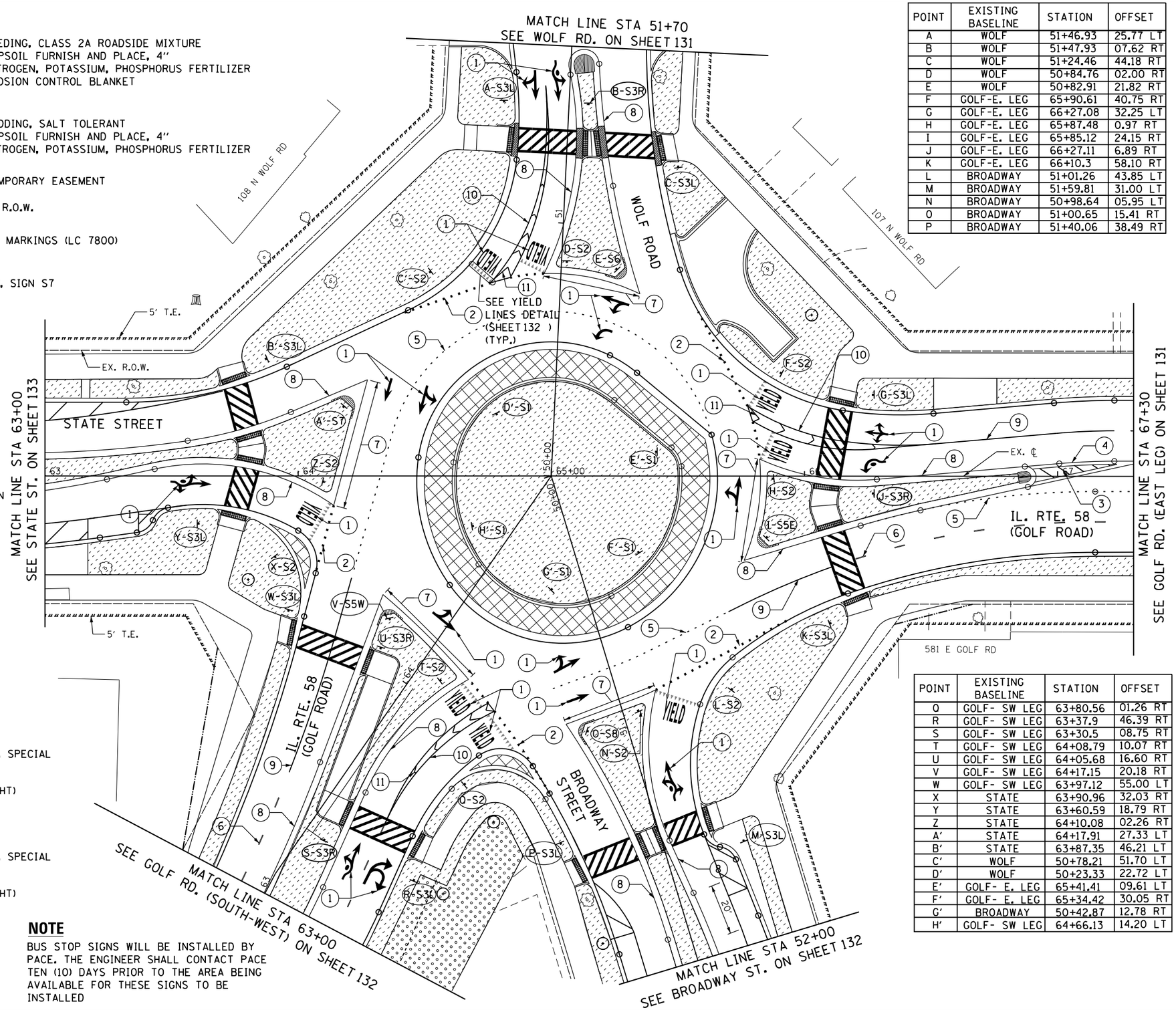

POINT	EXISTING BASELINE	STATION	OFFSET
A	WOLF	51+46.93	25.77 LT
B	WOLF	51+47.93	07.62 RT
C	WOLF	51+24.46	44.18 RT
D	WOLF	50+84.76	02.00 RT
E	WOLF	50+82.91	21.82 RT
F	GOLF-E. LEG	65+90.61	40.75 RT
G	GOLF-E. LEG	66+27.08	32.25 LT
H	GOLF-E. LEG	65+87.48	0.97 RT
I	GOLF-E. LEG	65+85.12	24.15 RT
J	GOLF-E. LEG	66+27.11	6.89 RT
K	GOLF-E. LEG	66+10.3	58.10 RT
L	BROADWAY	51+01.26	43.85 LT
M	BROADWAY	51+59.81	31.00 LT
N	BROADWAY	50+98.64	05.95 LT
O	BROADWAY	51+00.65	15.41 RT
P	BROADWAY	51+40.06	38.49 RT

POINT	EXISTING BASELINE	STATION	OFFSET
Q	GOLF- SW LEG	63+80.56	01.26 RT
R	GOLF- SW LEG	63+37.9	46.39 RT
S	GOLF- SW LEG	63+30.5	08.75 RT
T	GOLF- SW LEG	64+08.79	10.07 RT
U	GOLF- SW LEG	64+05.68	16.60 RT
V	GOLF- SW LEG	64+17.15	20.18 RT
W	GOLF- SW LEG	63+97.12	55.00 LT
X	STATE	63+90.96	32.03 RT
Y	STATE	63+60.59	18.79 RT
Z	STATE	64+10.08	02.26 RT
A'	STATE	64+17.91	27.33 LT
B'	STATE	63+87.35	46.21 LT
C'	WOLF	50+78.21	51.70 LT
D'	WOLF	50+23.33	22.72 LT
E'	GOLF- E. LEG	65+41.41	09.61 LT
F'	GOLF- E. LEG	65+34.42	30.05 RT
G'	BROADWAY	50+42.87	12.78 RT
H'	GOLF- SW LEG	64+66.13	14.20 LT

NOTE

BUS STOP SIGNS WILL BE INSTALLED BY PACE. THE ENGINEER SHALL CONTACT PACE TEN (10) DAYS PRIOR TO THE AREA BEING AVAILABLE FOR THESE SIGNS TO BE INSTALLED

P:\1501-638 W07 CumberlandCircle\CADD-Sheets\0162B16-sht-308-PMK1_RoundAbout.dgn

HBM ENGINEERING GROUP, LLC

USER NAME = Kendrabant	DESIGNED - EA	REVISED - 12/01/2017	
	DRAWN - EA	REVISED -	
PLOT SCALE = 40.0000 ' / in.	CHECKED - RB	REVISED -	
PLOT DATE = 12/1/2017	DATE - 10/17/2017	REVISED -	

STATE OF ILLINOIS
DEPARTMENT OF TRANSPORTATION

PAVEMENT MARKING, LANDSCAPING & SIGNING PLAN
ROUNDABOUT

SCALE: | SHEET 1 OF 4 SHEETS | STA. TO STA.

F.A.P. RTE.	SECTION	COUNTY	TOTAL SHEETS	SHEET NO.
339	583-R	COOK	186	130

CONTRACT NO. 62B16

ILLINOIS FED. AID PROJECT

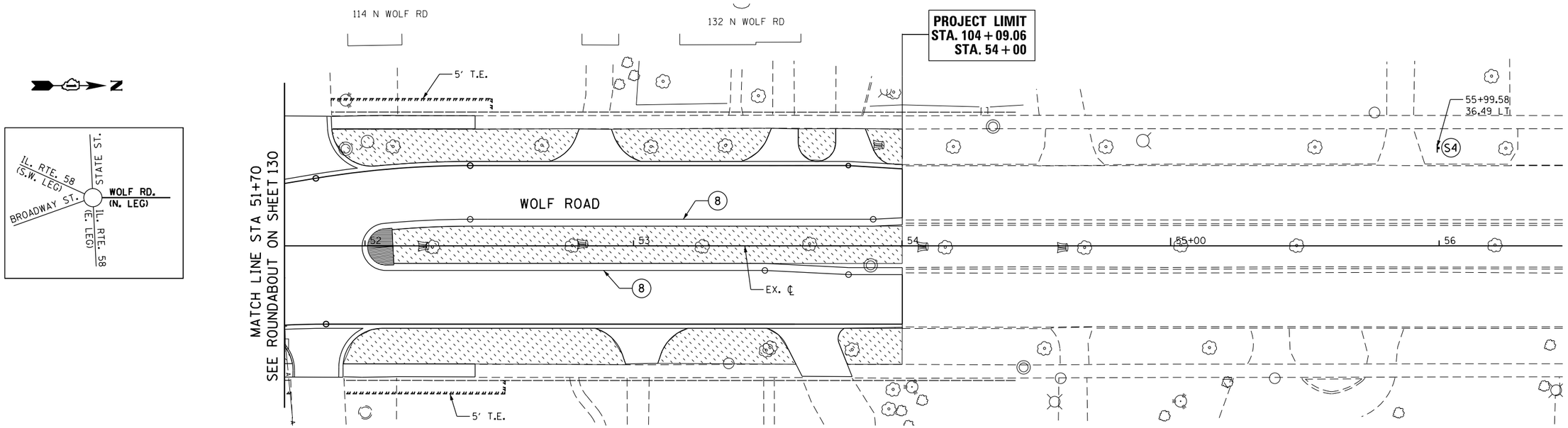

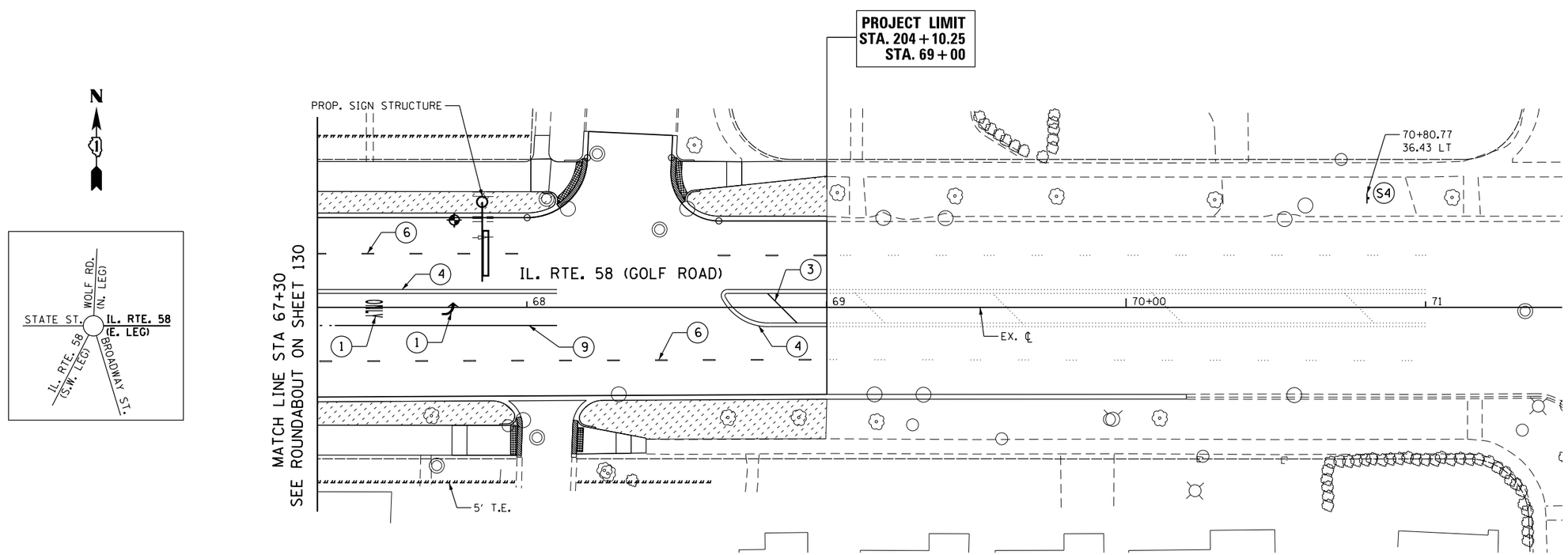

NOTE

1.FOR LEGEND, SEE SHEET 92.

P:\1501-638 W07 CumberlandCircle\CADD Sheets\D162B16-sht-301-PMK2_Wolf&GolfEast.dgn

HBM ENGINEERING GROUP, LLC	USER NAME = Kendrabant	DESIGNED - EA	REVISED - 12/01/2017	STATE OF ILLINOIS DEPARTMENT OF TRANSPORTATION	PAVEMENT MARKING, LANDSCAPING & SIGNING PLAN WOLF RD. & GOLF RD. (EAST)
		DRAWN - EA	REVISED -		
	PLOT SCALE = 40.0000 ' / in.	CHECKED - RB	REVISED -		
	PLOT DATE = 12/1/2017	DATE - 10/17/2017	REVISED -		SCALE: SHEET 2 OF 4 SHEETS STA. TO STA.

F.A.P. RTE.	SECTION	COUNTY	TOTAL SHEETS	SHEET NO.
339	583-R	COOK	186	131
		CONTRACT NO. 62B16		
		ILLINOIS FED. AID PROJECT		

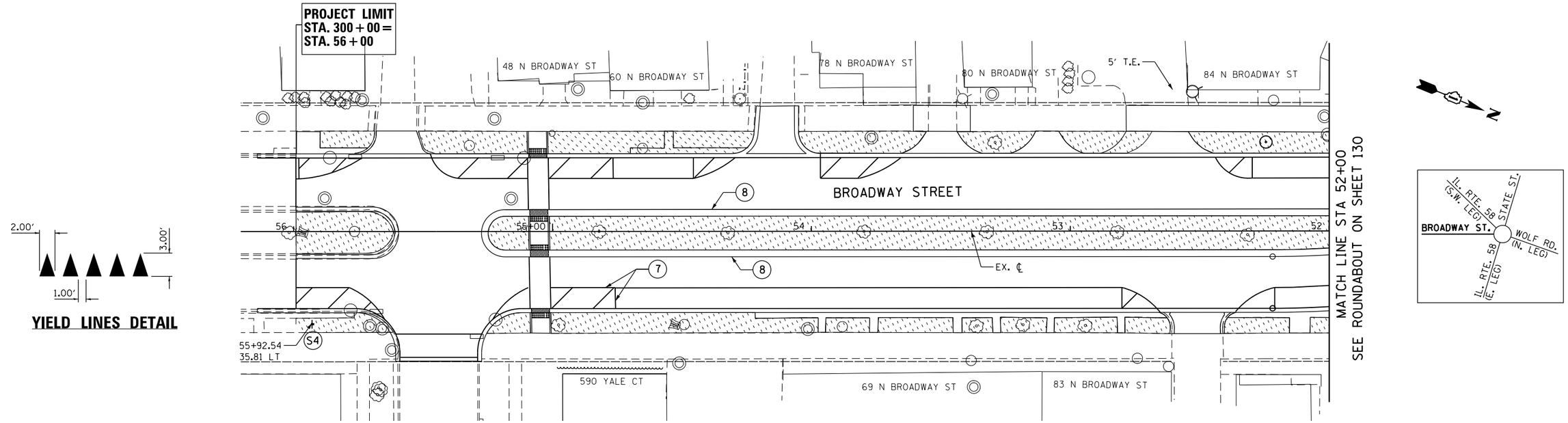

YIELD LINES DETAIL

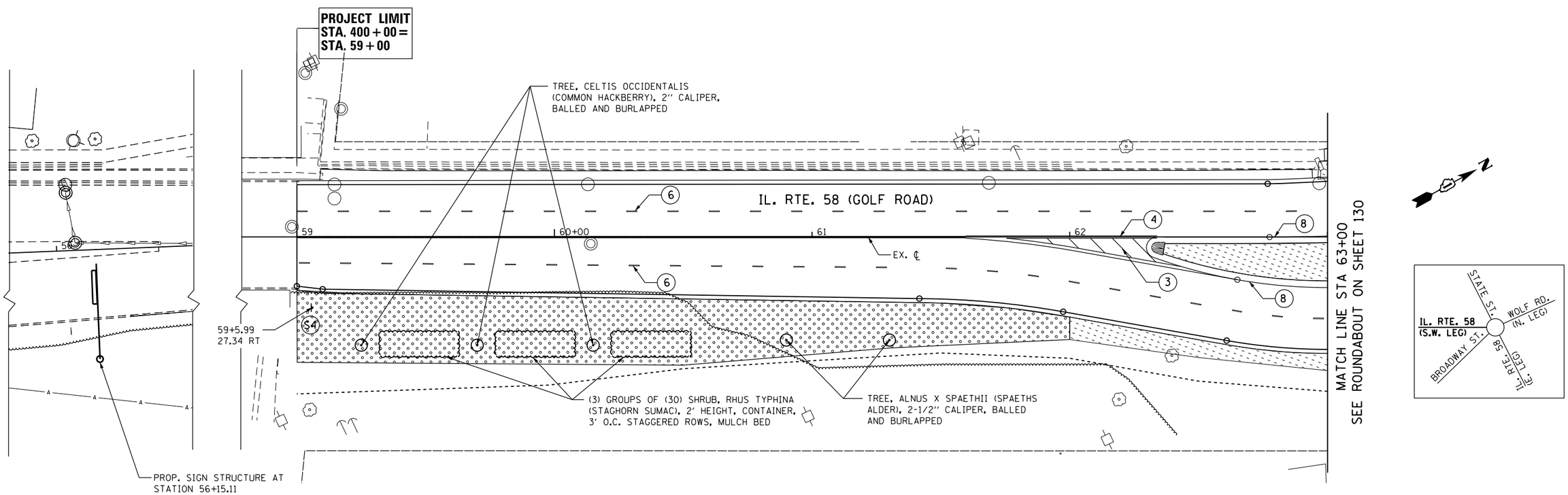

NOTE

1.FOR LEGEND, SEE SHEET 92.

P:\1501-638 W07 CumberlandCircle\CADD\Sheets\0162B16-sht-302-PMX3_Broadway&GolfWestsdgn

HBM ENGINEERING GROUP, LLC	USER NAME = Kendrabant	DESIGNED - EA	REVISED - 12/01/2017	STATE OF ILLINOIS DEPARTMENT OF TRANSPORTATION	PAVEMENT MARKING, LANDSCAPING & SIGNING PLAN BROADWAY ST. & GOLF RD. (WEST)	F.A.P. RTE.	SECTION	COUNTY	TOTAL SHEETS	SHEET NO.
		DRAWN - EA	REVISED -			339	583-R	COOK	186	132
	PLOT SCALE = 40.0000 ' / in.	CHECKED - RB	REVISED -					CONTRACT NO. 62B16		
	PLOT DATE = 12/1/2017	DATE - 10/17/2017	REVISED -		SCALE: SHEET 3 OF 4 SHEETS STA. $$PNPO60 STA.			ILLINOIS FED. AID PROJECT		

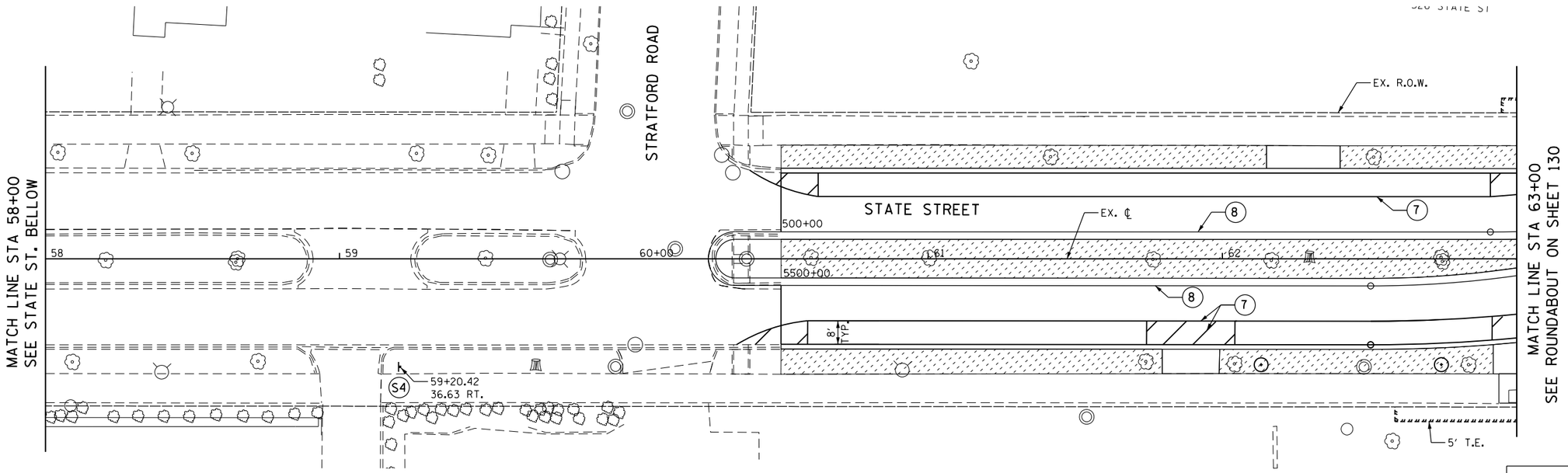

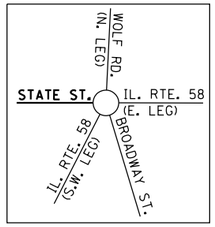

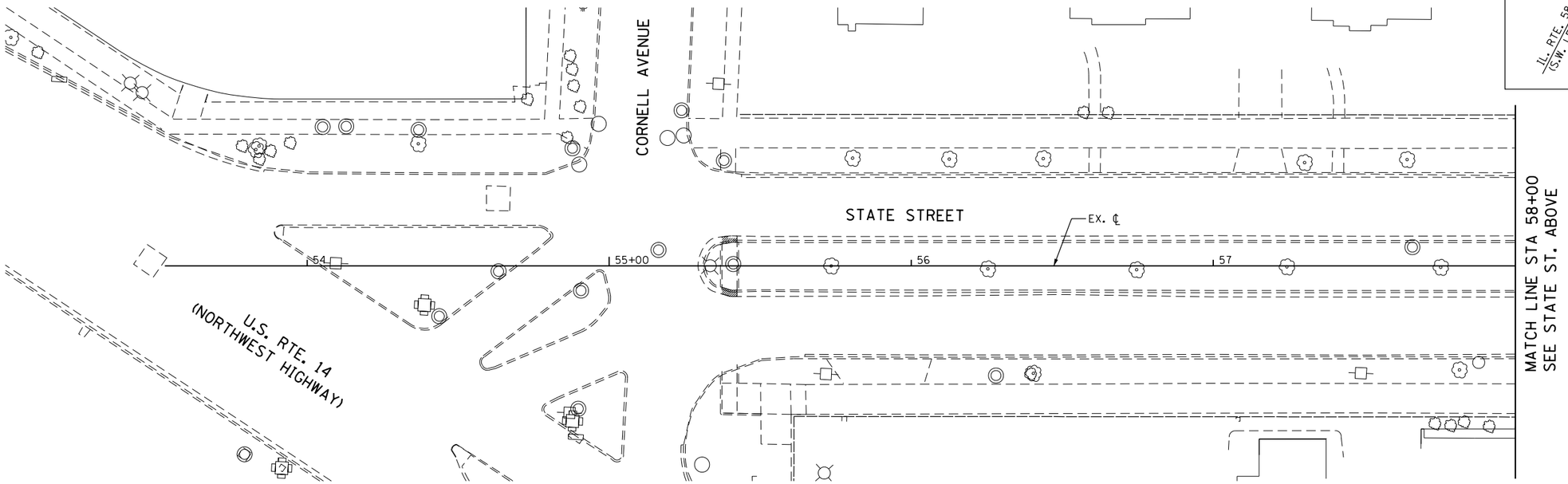

NOTE

1.FOR LEGEND, SEE SHEET 92.

HBM ENGINEERING GROUP, LLC	USER NAME = Kendrabant	DESIGNED - EA	REVISED - 12/01/2017	STATE OF ILLINOIS DEPARTMENT OF TRANSPORTATION	PAVEMENT MARKING, LANDSCAPING & SIGNING PLAN STATE ST.	F.A.P. RTE.	SECTION	COUNTY	TOTAL SHEETS / SHEET NO.
		DRAWN - EA	REVISED -			339	583-R	COOK	186 / 133
	PLOT SCALE = 40.0000 ' / in.	CHECKED - RB	REVISED -					CONTRACT NO. 62B16	
	PLOT DATE = 12/1/2017	DATE - 10/17/2017	REVISED -		SCALE: SHEET 4 OF 4 SHEETS STA. TO STA.		ILLINOIS FED. AID PROJECT		

P:\1501-630 WO7 Cumberland-Circle\CADD Sheets\D162B16-sht-383-PMK4.Stateadan

LEGEND

- PROPOSED LIGHT POLE, 30' MH, 6' MA, 220W LED LUMINAIRE, 240V (PHASE TO NEUTRAL)
- EXISTING LIGHT POLE, 6' MA, 250W HPS LUMINAIRE 240V (PHASE TO NEUTRAL)
- EXISTING LIGHT POLE TO BE REMOVED
- PROPOSED LIGHTING CONTROLLER
- PROPOSED ELECTRIC SERVICE INSTALLATION
- JUNCTION BOX
- EXISTING LIGHTING CABLES IN UNDERGROUND DUCT TO REMAIN IN PLACE
- UNDERGROUND CONDUITS SIZE AS INDICATED WITH CABLES AS APPLICABLE
- UNIT DUCT, 600V, 3-1/C NO.4, 1/C NO.6 GROUND, (XLP-TYPE USE), 1½" DIA. POLYETHYLENE

CALL-OUT SAMPLES

DEFINITION	EXAMPLE
POLE IDENTIFICATION LOCATION OFFSET FROM CONTERLINE	XA1 STA. 53+30 OFFSE 27' LT
CONDUIT LENGTH-SIZE, TYPE	50'-3" DIA. RGS
CONDUCTORS RACEWAY	3-1C#2, 1/C#4 GND, 1¼" DIA. UNIT DUCT

ABBREVIATIONS

SYMBOL	DESCRIPTION
AC	ALTERNATING CURRENT
A/C	AERIAL CABLE
AFG	ABOVE FINISHED GRADE
CB	CIRCUIT BREAKER
CKT	CIRCUIT
CM	CENTIMETER
CNC	COILABLE NONMETALLIC CONDUIT
CT	CURRENT TRANSFORMER
CP	CONTROL PANEL
DA	DAVIT ARM
DC	DIRECT CURRENT
DIA	DIAMETER
DP	DISTRIBUTION PANEL
E	EXISTING UNIT TO REMAIN
ECA	ELECTRIC CABLE ASSEMBLY
EM	EXISTING UNIT TO BE MODIFIED (e.g. NEW LUMINAIRE, BALLAST OR MAST ARM)
ER	EXISTING RELOCATED UNIT
ET	EXISTING TEMPORARY UNIT TO REMAIN
ETR	EXISTING TEMPORARY RELOCATED UNIT
FT	FEET OR FOOT
FND BW	FOUNDATION BARRIER WALL
FND BW OS	FOUNDATION BARRIER WALL OFFSET
FND CON	FOUNDATION CONCRETE
FND CON OS	FOUNDATION CONCRETE OFFSET
FND MET	FOUNDATION METAL
FND PW	FOUNDATION PARAPET WALL
FU	FUSE
GND	GROUND
HID	HIGH INTENSITY DISCHARGE
JB	JUNCTION BOX
KVA	KILOVOLT-AMPERE
KW	KILOWATTS
LT	LEFT
MA	MAST ARM
MM	MILLIMETER
MH	MOUNTING HEIGHT
NO. #	NUMBER
P	PROPOSED
PB	PUSH BUTTON
PNL	PANEL
PVCC RGC	PVC COATED RIGID GALVANIZED CONDUIT
PT	POTENTIAL TRANSFORMER
R	EXISTING UNIT TO BE REMOVED (OWNER SALVAGED U.N.O.)
RT	RIGHT
RECP	RECEPTACLE
RGC	RIGID GALVANIZED CONDUIT
RGS	RIGID GALVANIZED STEEL
SEL SW	SELECTOR SWITCH
SPARE	SPARE
SPACE	SPACE
SS	STAINLESS STEEL
STA	STATION
T	TEMPORARY LIGHTING UNIT
TB	TRANSFORMER BASE
TMP	TEMPORARY
TR	TEMPORARY UNIT TO BE REMOVED. SALVAGE EQUIPMENT AS SPECIFIED
TRR	TEMPORARY UNIT TO BE REMOVED AND RELOCATED
TUR	TEMPORARY UNIT ON UTILITY POLE TO BE REMOVED
UD	UNIT DUCT
U.N.O.	UNLESS NOTED OTHERWISE
WP	WOOD POLE
XFMR	TRANSFORMER

GENERAL NOTES:

1. THE CONTRACTOR SHALL VERIFY ALL OF THE INFORMATION SHOWN ON THE CONTRACT DRAWINGS, WHICH WOULD AFFECT THE WORK UNDER THIS CONTRACT.
2. IT IS THE RESPONSIBILITY OF THE CONTRACTOR TO ASCERTAIN EXISTING FIELD CONDITIONS BEFORE BIDDING ON THIS PROJECT, SPECIFICALLY AS THEY RELATE TO LUMP SUM ITEMS AND UNIT PRICE ITEMS.
3. ALL NEW CONDUITS, UNIT DUCTS, DIRECT BURIAL CABLES, AND APPURTENANCES ARE INDICATED DIAGRAMMATICALLY ON THE DRAWINGS. THE ACTUAL LOCATIONS IN THE FIELD SHALL MEET WITH APPROVAL OF THE ENGINEER.
4. THE ELECTRICAL WORK SHALL BE PERFORMED IN ACCORDANCE WITH THE IDOT STANDARD SPECIFICATIONS FOR ROAD AND BRIDGE CONSTRUCTION AND ASSOCIATED SUPPLEMENTAL SPECIFICATIONS AND RECURRING SPECIAL PROVISIONS (LATEST EDITION).
5. THE SCALE SHOWN ON PLAN DRAWINGS APPLIES ONLY TO THE FULL SIZE PLANS AND NOT TO REDUCED SIZE PLANS.
6. THE CONTRACTOR SHALL FURNISH AND INSTALL LUMINAIRES IN ACCORDANCE WITH THE SUPPLIER'S RECOMMENDATIONS AND IN ACCORDANCE WITH THE SPECIFICATIONS. THE COST OF THIS WORK AND MATERIAL SHALL BE INCLUDED IN THE APPLICABLE LUMINAIRE PAY ITEM. SEPARATE PAYMENT WILL NOT BE MADE.
7. ALL LUMINAIRES SHALL BE ORIENTED WITH THE OPTICS PERPENDICULAR TO THE ROADWAY UNLESS OTHERWISE INDICATED OR DIRECTED BY THE ENGINEER. THIS WORK SHALL BE CONSIDERED INCLUDED IN THE APPLICABLE LUMINAIRE PAY ITEMS. SEPARATE PAYMENT WILL NOT BE MADE.
8. CONDUITS AND UNIT DUCTS SHALL BE INSTALLED AT A MINIMUM 30" DEPTH BELOW GRADE AND POSITIONED IN THE FIELD TO AVOID CONFLICT WITH ROADWAY UNDERDRAINS AND OTHER EXISTING AND PROPOSED UTILITIES. THE CONTRACTOR SHALL INCREASE DEPTH OF UNIT DUCT AND CONDUIT AS REQUIRED AT NO ADDITIONAL COST TO THE STATE. THE CONTRACTOR SHALL COORDINATE RACEWAY DEPTH WITH THE ELECTRICAL DETAILS AND THE ENGINEER.
9. WHERE THE CONTRACTOR'S EXCAVATION MEETS AN OBSTRUCTION, THE CONTRACTOR SHALL NOTIFY THE ENGINEER FOR DIRECTION IN WRITING PRIOR TO EXCAVATION. THE CONTRACTOR SHALL RESTORE ANY DAMAGE TO EXISTING SYSTEMS OR UTILITIES AND ITEM. REMOVE EXISTING OBSTRUCTIONS AND FOUNDATIONS TO THE SATISFACTION OF THE ENGINEER. THIS WORK SHALL BE CONSIDERED INCIDENTAL TO THE APPROPRIATE PAY ITEM.
10. THE COST OF THE GROUND ROD IS INCLUDED IN THE PRICE OF THE FOUNDATION AND NO EXTRA COMPENSATION SHALL BE MADE.

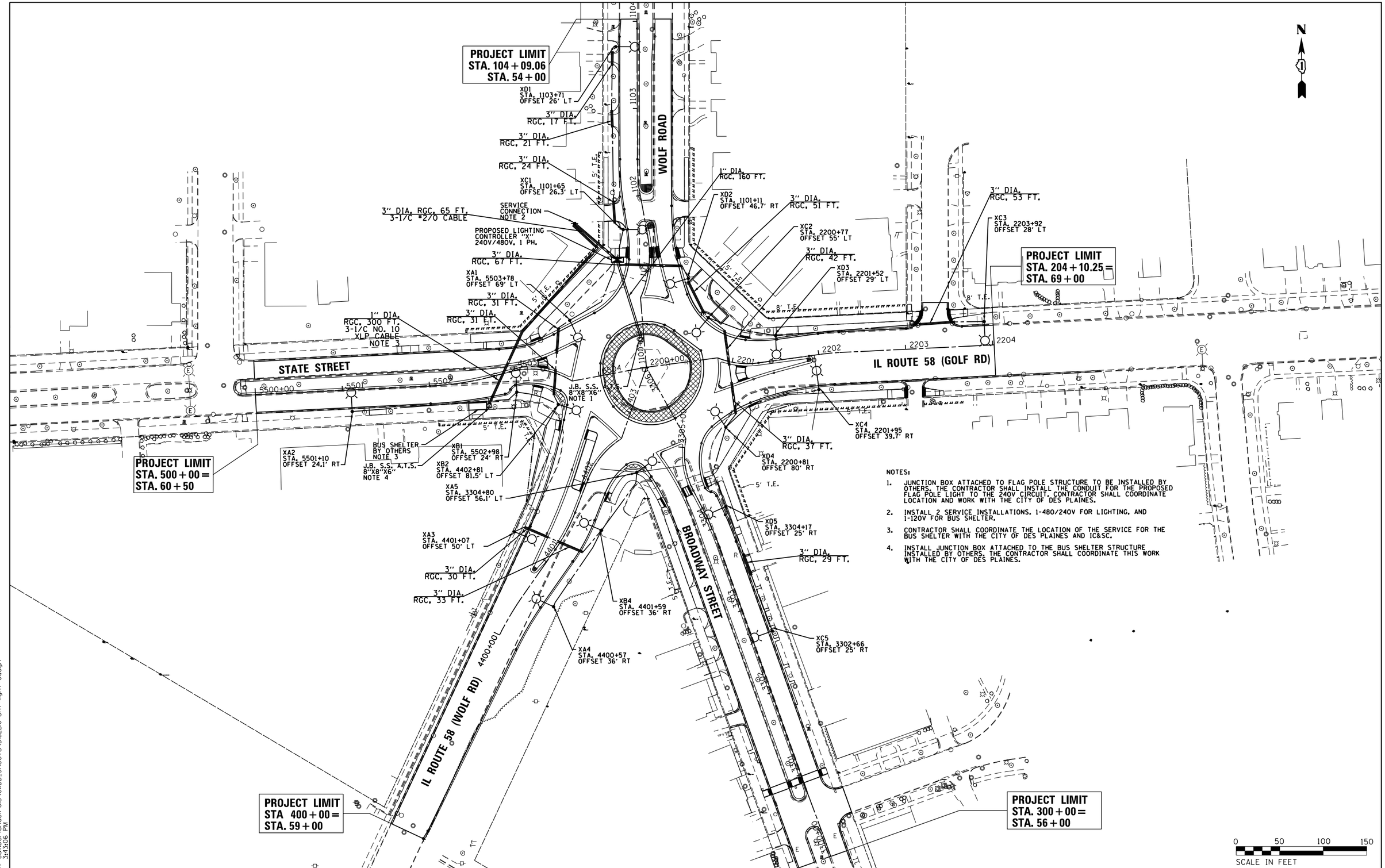

NOTES:

1. JUNCTION BOX ATTACHED TO FLAG POLE STRUCTURE TO BE INSTALLED BY OTHERS. THE CONTRACTOR SHALL INSTALL THE CONDUIT FOR THE PROPOSED FLAG POLE LIGHT TO THE 240V CIRCUIT. CONTRACTOR SHALL COORDINATE LOCATION AND WORK WITH THE CITY OF DES PLAINES.
2. INSTALL 2 SERVICE INSTALLATIONS. 1-480/240V FOR LIGHTING, AND 1-120V FOR BUS SHELTER.
3. CONTRACTOR SHALL COORDINATE THE LOCATION OF THE SERVICE FOR THE BUS SHELTER WITH THE CITY OF DES PLAINES AND IC&SC.
4. INSTALL JUNCTION BOX ATTACHED TO THE BUS SHELTER STRUCTURE INSTALLED BY OTHERS. THE CONTRACTOR SHALL COORDINATE THIS WORK WITH THE CITY OF DES PLAINES.

P:\150I-630 W07 CumberlandCircle\CADD_Sheets\D162B16-sht-light-01.dgn
$DATE$ 3:43:06 PM

GANDHI AND ASSOCIATES, INC.
ENGINEERS AND PLANNERS
6035 N. NORTHWEST HIGHWAY
SUITE 201
CHICAGO, ILLINOIS 60631 TEL.:773/774-5900

USER NAME = Kendrabant	DESIGNED - BR	REVISED - 12/01/2017	
	DRAWN - MA	REVISED -	
PLOT SCALE = 100.0000 ' / in.	CHECKED - PV	REVISED -	
PLOT DATE = 12/1/2017	DATE - 8/23/2017	REVISED -	

STATE OF ILLINOIS
DEPARTMENT OF TRANSPORTATION

IL ROUTE 58 (GOLF RD) AND WOLF ROAD
ROUNDABOUT PROPOSED LIGHTING

SCALE: 1" = 50' | SHEET 2 OF SHEETS | STA. TO STA.

F.A.P. RTE.	SECTION	COUNTY	TOTAL SHEETS	SHEET NO.
339	583-R	COOK	186	135
		CONTRACT NO. 62B16		
		ILLINOIS FED. AID PROJECT		

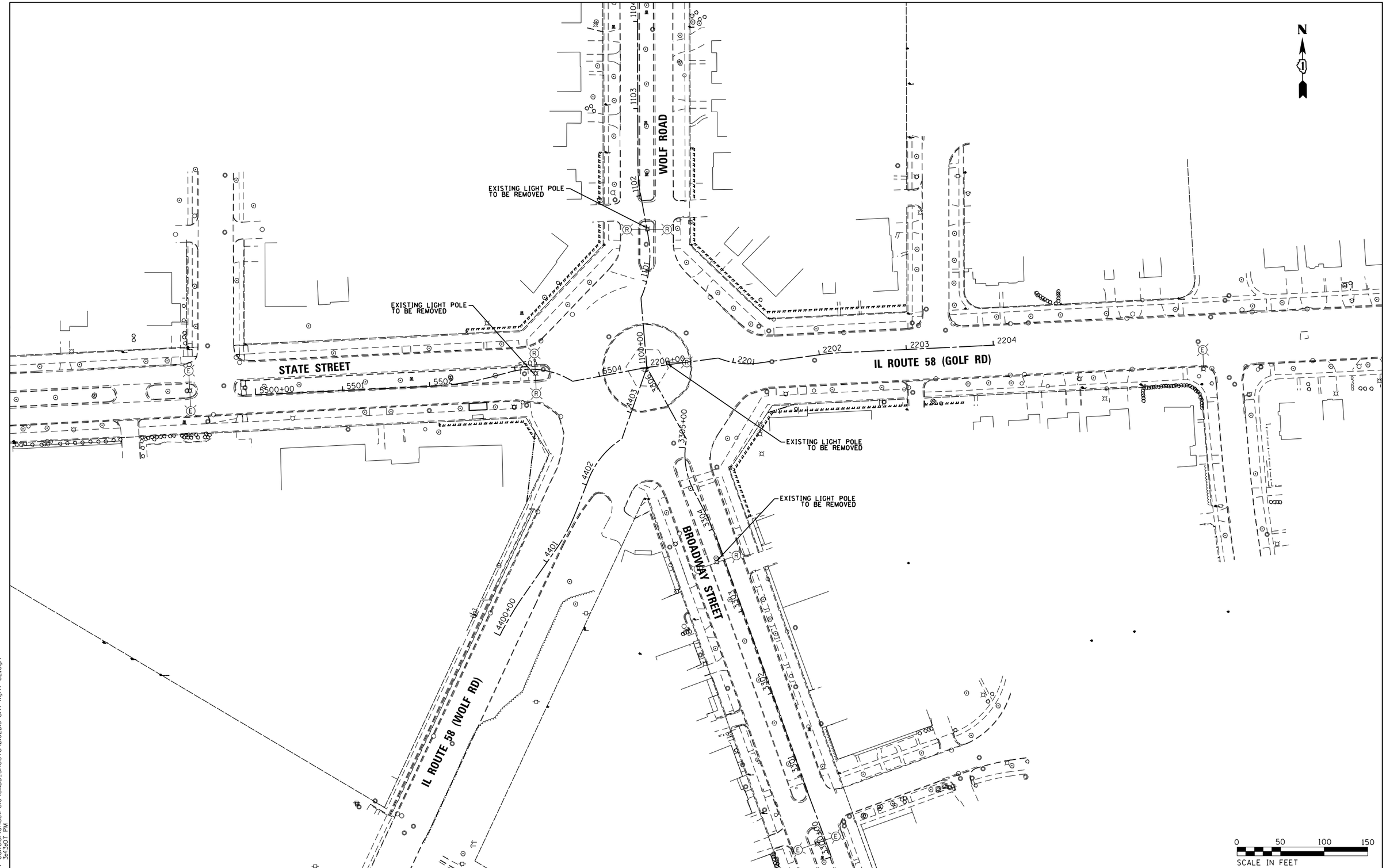

P:\1501-630 W07 CumberlandCircle\CADD_Sheets\D162B16-sht-light-02.dgn
$DATE$ 3:43:07 PM

GANDHI AND ASSOCIATES, INC.
ENGINEERS AND PLANNERS
6035 NORTHWEST HIGHWAY
SUITE 300
CHICAGO, ILLINOIS 60631 TEL.(773)774-5900

USER NAME = Kendrabant	DESIGNED - BR	REVISED - 12/01/2017	
	DRAWN - MA	REVISED -	
PLOT SCALE = 100.0000 ' / in.	CHECKED - PV	REVISED -	
PLOT DATE = 12/1/2017	DATE - 8/23/2017	REVISED -	

STATE OF ILLINOIS
DEPARTMENT OF TRANSPORTATION

IL ROUTE 58 (GOLF RD) AND WOLF ROAD
ROUNDABOUT LIGHTING REMOVAL

SCALE: 1" = 50' | SHEET 3 OF 9 SHEETS | STA. TO STA.

F.A.P. RTE.	SECTION	COUNTY	TOTAL SHEETS	SHEET NO.
339	583-R	COOK	186	136
		CONTRACT NO. 62B16		
		ILLINOIS FED. AID PROJECT		

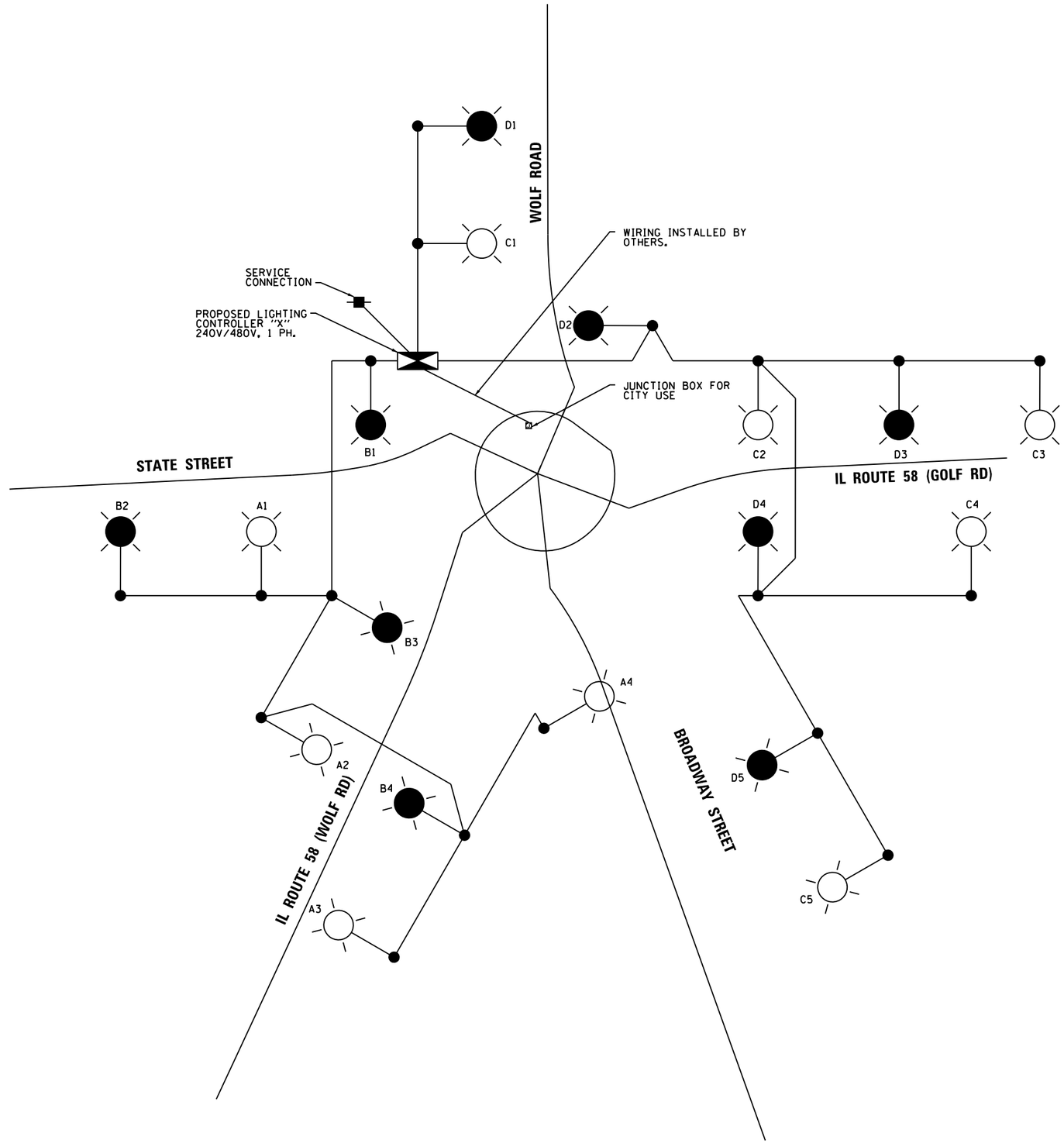

LOAD TABLE LIGHTING CONTROLLER (@ 240 VOLTS)					
CIRCUIT	RED PHASE		CIRCUIT	BLACK PHASE	
	AMPS	WATTS		AMPS	WATTS
A	5	1200	B	4	960
C	5	1200	D	5	1200
E	0.8	200	F	0	0
TOTAL	10.8	2600	TOTAL	9	2160

TOTAL LOAD ON CONTROLLER (@240 V): 20 AMP

P:\501-630 W07 CumberlandCircle\CADD_Sheets\D162B16-sht-light-03.dgn
$DATE$ 3:43:08 PM

GANDHI AND ASSOCIATES, INC.
ENGINEERS AND PLANNERS
6035 N.NORTHWEST HIGHWAY
SUITE 300
CHICAGO, ILLINOIS 60631 TEL.(773)774-5900

USER NAME = Kendrabant	DESIGNED - BR	REVISED - 12/01/2017	
	DRAWN - MA	REVISED -	
PLOT SCALE = 100.0000 ' / in.	CHECKED - PV	REVISED -	
PLOT DATE = 12/1/2017	DATE - 8/23/2017	REVISED -	

STATE OF ILLINOIS
DEPARTMENT OF TRANSPORTATION

IL ROUTE 58 (GOLF RD) AND WOLF ROAD
SINGLE-LINE DIAGRAM

SCALE: N.T.S. | SHEET 4 OF 9 SHEETS | STA. TO STA.

F.A.P. RTE.	SECTION	COUNTY	TOTAL SHEETS	SHEET NO.
339	583-R	COOK	186	137
		CONTRACT NO. 62B16		
		ILLINOIS FED. AID PROJECT		

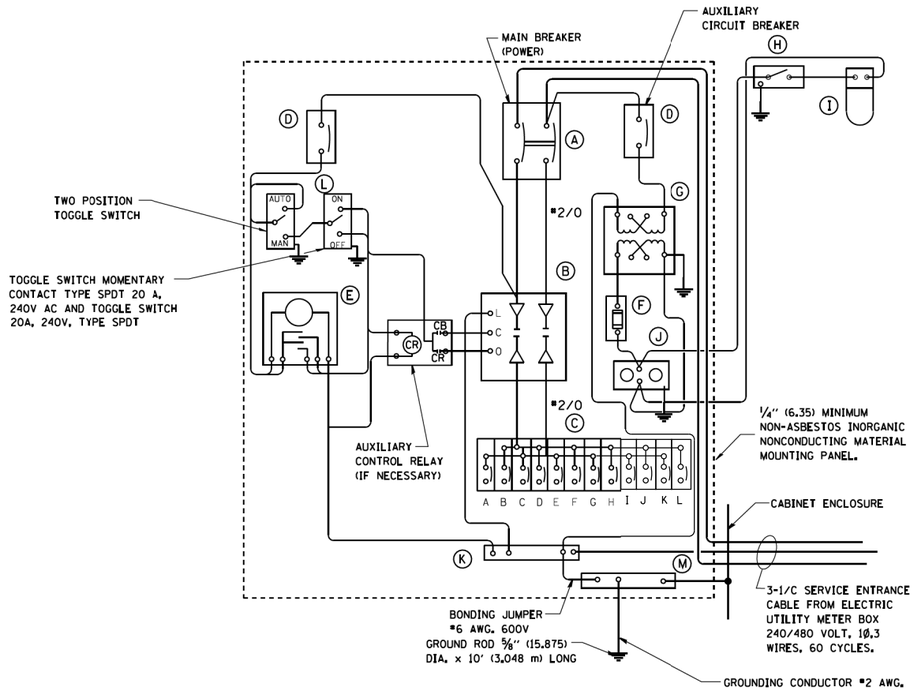

PANEL WIRING DIAGRAM

PANEL EQUIPMENT

BILL OF MATERIAL

ITEM	QUANTITY	DESCRIPTION
A	1	MAIN CIRCUIT BREAKER, 2 POLE, 600 VOLT 100 AMP. FRAME, 100 AMP. NON-INTERCHANGEABLE TRIP INTERRUPTING RATING NEMA-22000 AMP. AT 480 VOLT.
B	1	REMOTE CONTROL SWITCH, ELECTRICALLY OPERATED, MECHANICALLY HELD, 2 POLE, SINGLE THROW, 100 AMP., 600 VOLTS CONTROL CIRCUIT 240 VOLT.
C	10	CIRCUIT BREAKERS, 1 POLE, 100AMP. FRAME , 50 AMP. NON-INTERCHANGEABLE TRIP INTERRUPTING RATING NEMA-10,000 AMP. AT 240 V.
D	2	CONTROL CIRCUIT-CIRCUIT BREAKER, 1 POLE, 240 V., 100 AMP. FRAME, 15 AMP. NON-INTERCHANGEABLE TRIP INTERRUPTING RATING NEMA-5000 AMP. AT 240 V.
E	1	ASTRONOMIC MICROPROCESSOR-BASED 2-CHANNEL CONTROLLER [TIME SWITCH].
F	1	20 A., 120 V. FUSE.
G	1	1.5 KVA, SINGLE PHASE, ENCAPSULATED TRANSFORMER 240 X 480 / 120 X 240 VOLT, 60 Hz.
H	1	SPST 20A SWITCH ON DOOR, TO TURN LIGHT ON WHEN DOOR IS OPEN.
I	1	INCANDESCENT LIGHTING FIXTURE ENCLOSED AND GASKETED WITH 60 WATT, 120 V. LAMP.
J	1	20 A., 120 V., DUPLEX RECEPTACLE, GFCI.
K	1	COPPER GROUND BUS 1/4" (6.35) X 1" (25.4) X 12" (304.8 mm) LONG MOUNTED ON PANEL WITH LUGS AND 4 SPARE LUGS
L	1	TOGGLE SWITCHES MOUNTED IN 4" (101.6) X 4" (101.6 mm) BOX.
M	1	COPPER GROUND BUS 1/4" (6.35) X 1" (25.4) X 12" (304.8 mm) LONG MOUNTED ON PANEL WITH LUGS AND SPARE LUGS

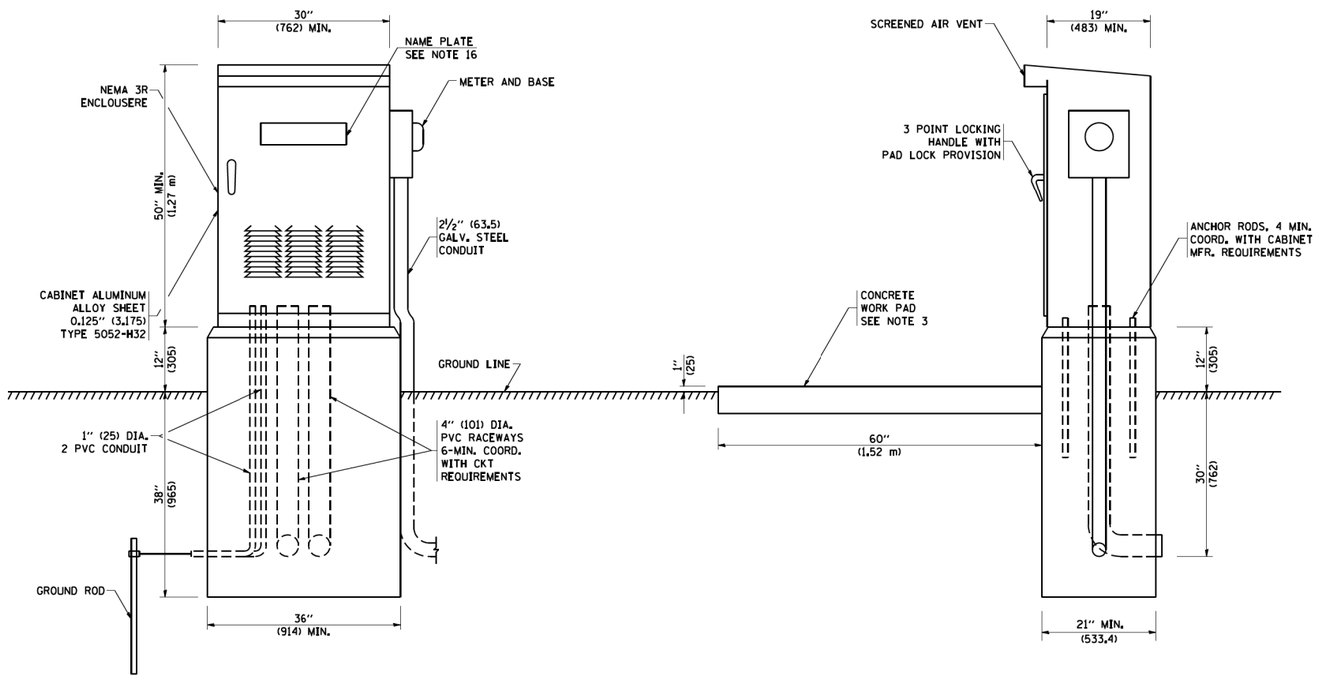

NOTES:

1. ALL DIMENSIONS ARE IN INCHES (MILLIMETERS) UNLESS OTHERWISE SHOWN.
2. FOUNDATION SIZE SHALL BE COORDINATED WITH CABINET SIZE AND MFR.
3. IN FRONT OF CONTROL CABINET DOOR, REMOVE VEGETATION AND 2" (50.8 mm) TOP SOIL. LEVEL THE AREA AND ON TOP, PLACE LENGTH WISE PARALLEL TO CONTROL CABINET, A CONCRETE PAD 36" (914.4 mm) x 60" (18.288 m) x 4" (101 mm) MIN. SIZE. THE COST OF LABOR AND MATERIALS ARE INCLUDED IN THE COST OF THE CONTROLLER.
4. DOOR SHALL BE CONSTRUCTED FROM SAME TYPE OF MATERIAL AND THICKNESS AS CABINET.
5. DOOR SHALL BE EQUIPPED WITH THREE POINT LATCHING MECHANISM WITH NYLON ROLLERS AT TOP THE BOTTOM.
6. DOOR HINGE SHALL BE A HEAVY GAUGE CONTINUOUS HINGE WITH A 1/4" (6.35 mm) DIA. STAINLESS STEEL HINGE PIN.
7. ALL EXTERNAL HARDWARE SHALL BE STAINLESS STEEL.
8. CONTROL WIRING TO BE #12 AWG, 600V, TYPE "SIS" GRAY SWITCH BOARD WIRE, STRANDED COPPER.
9. METER BOX SHALL BE MOUNTED ON THE SIDE OF CONTROL CABINET, NEAR TO THE SERVICE POLE.
10. CABINETS SHALL BE PRIMED AND PAINTED AS SPECIFIED.
11. THE HEADS OF CONNECTORS SCREWS SHALL BE PAINTED WHITE FOR NEUTRAL BAR CONNECTION AND GREEN FOR GROUND BAR CONNECTORS.
12. ALL WIRING WITHIN THE CABINET SHALL BE COLOR CODED AS INDICATED.
    R = RED BL = BLUE W = WHITE
    B = BLACK Y = YELLOW G = GREEN
13. PROVIDE SEALING GROMMETS FOR ALL OPEN WIRING EXTENDED FROM DEVICES IN BOXES OR CABINETS WITHIN THE CONTROL CABINET.
14. ALL WIRING SHALL BE NEATLY DRESSED AND SUPPORTED.
15. THE CONTROLLER SHALL BE CONSTRUCTED TO U.L. STD. 508 AND BEAR THE U.L. LABEL "ENCLOSED INDUSTRIAL CONTROL PANEL".
16. 12" (304.8) X 16" (406.4 mm) STAINLESS STEEL EXTERIOR NAMEPLATE SHALL BE ENGRAVED TO "VILLAGE OF DES PLAINES LIGHTING CONTROLS".

C:\Users\ken.drabant\Desktop\New folder (10)\CADD\D162B16-sht-light-04.dgn
$DATE$ 9:58:32 AM

GANDHI AND ASSOCIATES, INC.
ENGINEERS AND PLANNERS
6025 NORTHWEST HIGHWAY
SUITE 300
CHICAGO, ILLINOIS 60631 TEL.(773)774-5900

USER NAME = Ken.drabant	DESIGNED - BR	REVISED -	
	DRAWN - MA	REVISED -	
PLOT SCALE = 100.0000 ' / in.	CHECKED - PV	REVISED -	
PLOT DATE = 10/20/2017	DATE - 8/23/2017	REVISED -	

STATE OF ILLINOIS
DEPARTMENT OF TRANSPORTATION

IL ROUTE 58 (GOLF RD) AND WOLF ROAD
LIGHTING DETAILS

SCALE: N.T.S. | SHEET 5 OF 9 SHEETS | STA. TO STA.

F.A.P. RTE.	SECTION	COUNTY	TOTAL SHEETS	SHEET NO.
339	583-R	COOK	186	138

CONTRACT NO. 62B16

ILLINOIS FED. AID PROJECT

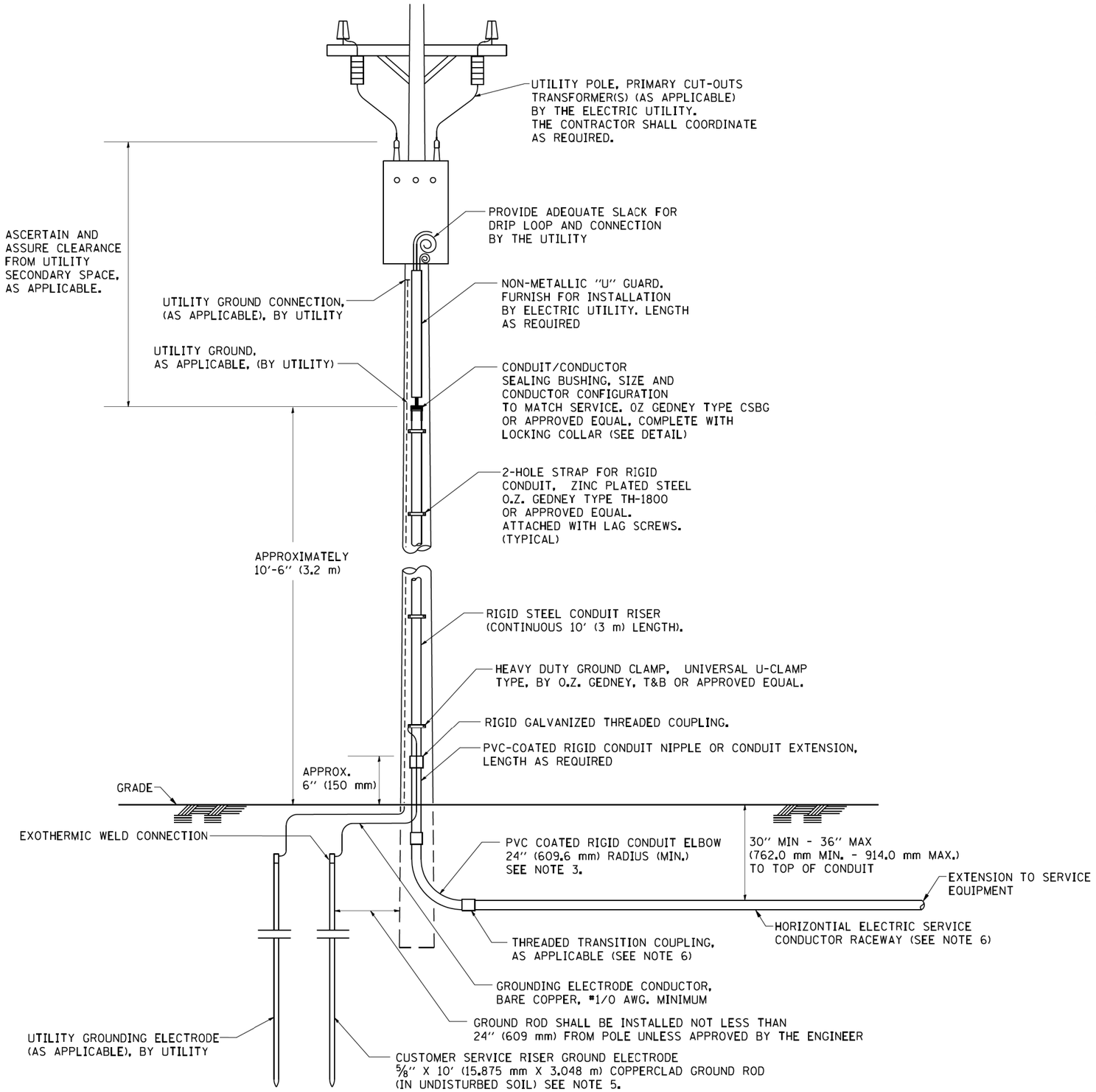

APPLICATION

THIS DETAIL APPLIES FOR LOW VOLTAGE ELECTRIC SERVICE (660 V OR LESS) FROM AN OVERHEAD UTILITY SUPPLY TO SEPERATLY-MOUNTED SERVICE EQUIPMENT.

NOTES

1. SERVICE VOLTAGE SHALL BE AS INDICATED ELSEWHERE IN THE DRAWINGS.
2. UNLESS OTHERWISE INDICATED, ITEMS AND WORK SHALL BE INCLUDED AND PAID AS PART OF THE ELECTRIC UTILITY SERVICE INSTALLATION PAY ITEM.
3. CONDUIT AND CONNECTOR DIAMETER SHALL MATCH THE DIAMETER OF THE SERVICE CONDUCTOR RACEWAY AS INDICATED ON THE PLANS.
4. PVC COATED RACEWAYS AND ACCESSORIES SHALL BE CAREFULLY INSTALLED WITH MFR RECOMMENDED TOOLS AND PROCEDURES TO AVOID DAMAGE. ANY DAMAGE SHALL BE REPAIRED WITH COMPATIBLE PVC TOUCH-UP MATERIAL TO THE SATISFACTION OF THE ENGINEER OR THE DAMAGED MATERIAL SHALL BE REPLACED AT NO ADDITIONAL COST.
5. THE CONTRACTOR SHALL OBTAIN INSPECTION AND APPROVAL BY THE ENGINEER OF SERVICE RISER GROUND ELECTRODE, RISER ELBOW, NIPPLE AND CONNECTION TO SERVICE CONDUCTOR RACEWAY EXTENSION BEFORE BACKFILL AND SHALL ALSO OBTAIN INSPECTION OF SERVICE RISER AND SEALING BUSHING BEFORE UTILITY "U" GUARD INSTALLATION AND SERVICE CONNECTION.
6. THE HORIZONTAL ELECTRIC SERVICE CONDUCTOR RACEWAY SHALL BE AS INDICATED AND SHALL BE MEASURED SEPARATELY FOR PAYMENT. WHEN THE RACEWAY IS PVC-COATED RIGID GALVANIZED STEEL, THE COUPLING SHALL BE THE SAME. WHEN THE RACEWAY IS PVC CONDUIT (IN CONCRETE), THE COUPLING SHALL BE A METALIC TO NON METALIC ADAPTER. WHEN THE RACEWAY IS ENCASED IN CONCRETE, THE CONCRETE SHALL EXTEND TO COVER THE COUPLING.
7. PLANS AND DETAILS INDICATE THE GENERAL NATURE AND REQUIREMENTS. THEY DO NOT SHOW EVERY ACCESSORY AND ATTACHMENT, AND THEY DO NOT RELIEVE THE CONTRACTOR OF THE REQUIREMENTS OF THE SPECIFICATIONS AND SPECIAL PROVISIONS TO ASCERTAIN UTILITY REQUIREMENTS AND TO COORDINATE ACCORDINGLY, FURNISHING ALL ITEMS AND WORK NOT PROVIDED BY THE UTILITY, BUT NECESSARY FOR A COMPLETE SERVICE INSTALLATION IS REQUIRED AND SHALL BE INCLUDED IN THE ELECTRIC UTILITY SERVICE INSTALLATION PAY ITEM.

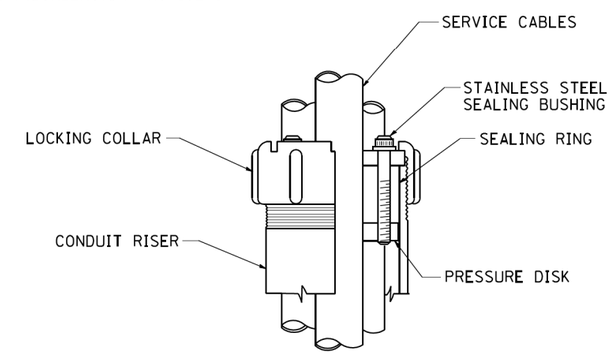

SEALING BUSHING DETAIL

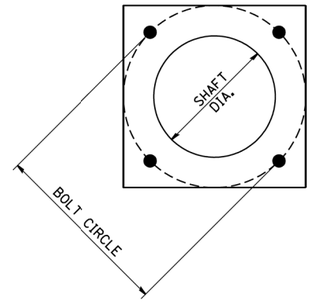

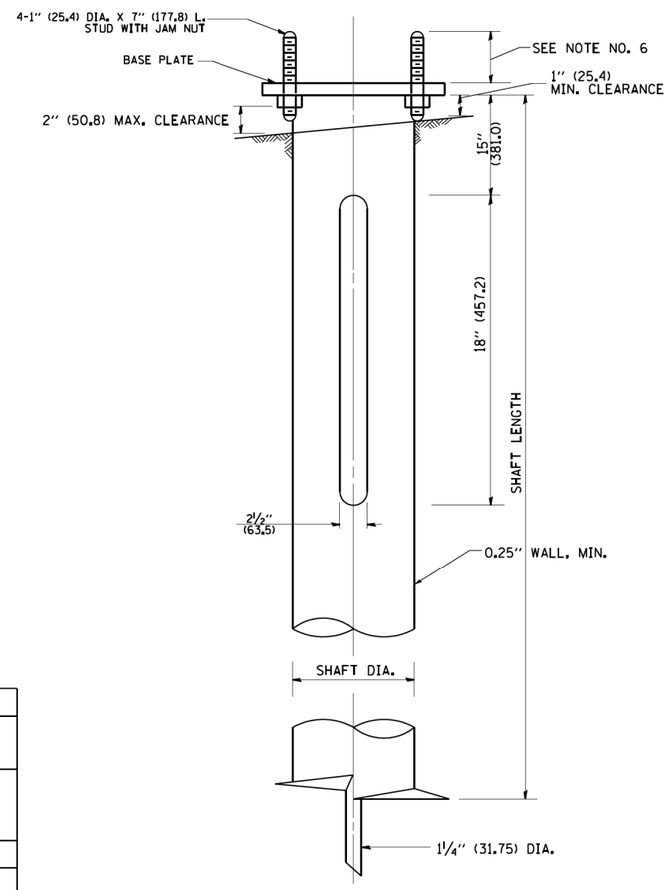

HELIX FOUNDATION SIZE

POLE MOUNTING HEIGHT	BOLT CIRCLE	SHAFT DIAMETER	SHAFT LENGTH	BASEPLATE
30 FT.	11½"	8⅝"	6 FT.	12"x12"x1"
31 FT.-35 FT.	11½"	8⅝"	6 FT.	12"x12"x1"
36 FT.-40FT.	15"	8⅝"	6 FT.	15"x15"x1¼"
41 FT.-45 FT.	15"	8⅝"	6 FT.	15"x15"x1¼"
46 FT.-50 FT.	15"	10"	8 FT.	15"x15"x1¼"

METAL HELIX FOUNDATION MATERIALS

ITEM	MATERIAL REQUIREMENT
BASEPLATE	AASHTO M 270M, GRADE 36 (M270M, GRADE 250)
SHAFT	ASTM A 252, GRADE 2 (PHOSPHOROUS 0.04% MAXIMUM, SULFUR 0.05% MAXIMUM)
HELIX SCREW	AASHTO M 183 (ASTM A 635)
PILOT POINT	AASHTO M 270 (ASTM A 575)
ANCHOR RODS/STUDS	AASHTO M 314 (ASTM F 1554)
HEXAGON NUTS	AASHTO M 291M (ASTM A 563) GRADE DH, OR AASHTO M 292 (ASTM A 194) GRADE 2H
WASHERS	AASHTO M 293 (ASTM F 436)

NOTES:

1. ALL DIMENSION IN INCHES (MILLIMETERS) UNLESS OTHERWISE SHOWN.
2. ALL MATERIAL SHALL BE GALVINIZED ACCORDING TO AASHTO M111, UNLESS OTHERWISE SPECIFIED.
3. ALL WELDS SHALL BE CONTINUOUS AND NOT LESS THAN ¼" (6.35 mm) FILLET WELDS. THE WELDED FOUNDATION SHALL BE CAPABLE OF WITHSTANDING 10,000 FT/LBS (13558.18 n.m) OF INSTALLATION TORQUE APPLIED ABOUT THE AXIS OF THE FOUNDATION.
4. THE HELIX FOUNDATION SHAFT SHALL BE INSTALLED VERTICAL AND THE BASE PLATE SHALL BE IN LEVEL. THE BREAKAWAY COUPLINGS AND HARDWARE SHALL NOT BE USED TO ALIGN THE POLE INSTALLATION.
5. THE CABLE TRENCH SHALL BE BACKFILLED AND FIRMLY COMPACTED BEFORE THE INSTALLATION OF THE LIGHT POLE.
6. THE CONTRACTOR SHALL COORDINATE EXTENSION OF ANCHOR BOLTS ABOVE TOP OF THE BASE PLATE WITH THE BREAKAWAY DEVICE MANUFACTURER'S REQUIREMENTS.
7. ANY VOIDS WITHIN THE METAL FOUNDATION SHALL BE FILLED WITH FINE AGGREGATE.
8. METAL FOUNDATIONS SHALL BE INSTALLED IN UNDISTURBED SOIL. PREDRILLING A PILOT HOLE AND/OR BACKFILLING AROUND THE FOUNDTION IS NOT ALLOWED.
9. THE METAL FOUNDATION SHALL NOT BE INSTALLED TO A TORQUE WHICH EXCEEDS THE MANUFACTURER'S MAXIMUM TORQUE RATING NOR SHALL IT BE INSTALLED TO AN INSTALLATION TORQUE VALUE OF LESS THAN 3,500 FT LB (4,750 KNM). METAL FOUNDATIONS THAT ARE NOT INSTALLED TO FULL INSTALLATION DEPTH OR DO NOT ACHIEVE THE MINIMUM INSTALLATION TORQUE SHALL BE REMOVED AND REPLACED WITH A CONCRETE FOUNDATION AT NO ADDITIONAL COST.
10. THE BASEPLATE SHALL BE PERPENDICULAR TO THE SHAFT AXIS (± 1°) AND THE HOLE CENTERLINE SHALL BE CONCENTRIC (± 0.188) TO THE SHAFT AXIS.
11. THE PILOT POINT AND SHAFT AXIS SHALL BE CONCENTRIC (± 0.125) AND IN LINE (± 2°).
12. THE BASEPLATE SHALL BE STAMPED WITH THE MANUFACTURERS NAME AND DATE OF MANUFACTURE.

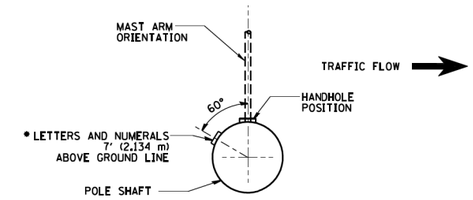

POSITION OF HANDHOLE AND POLE NUMBER FOR SINGLE MAST ARM POLES MOUNTED ON BRIDGE PARAPET OR BARRIER WALL

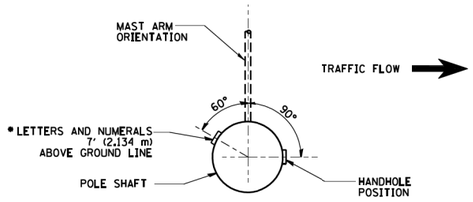

POSITION OF HANDHOLE AND POLE NUMBER FOR SINGLE MAST ARM POLES

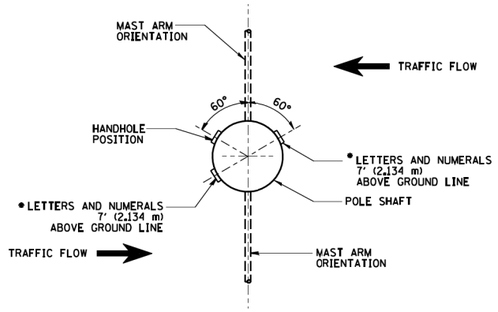

POSITION OF HANDHOLE AND POLE NUMBER FOR TWIN MAST ARM POLES

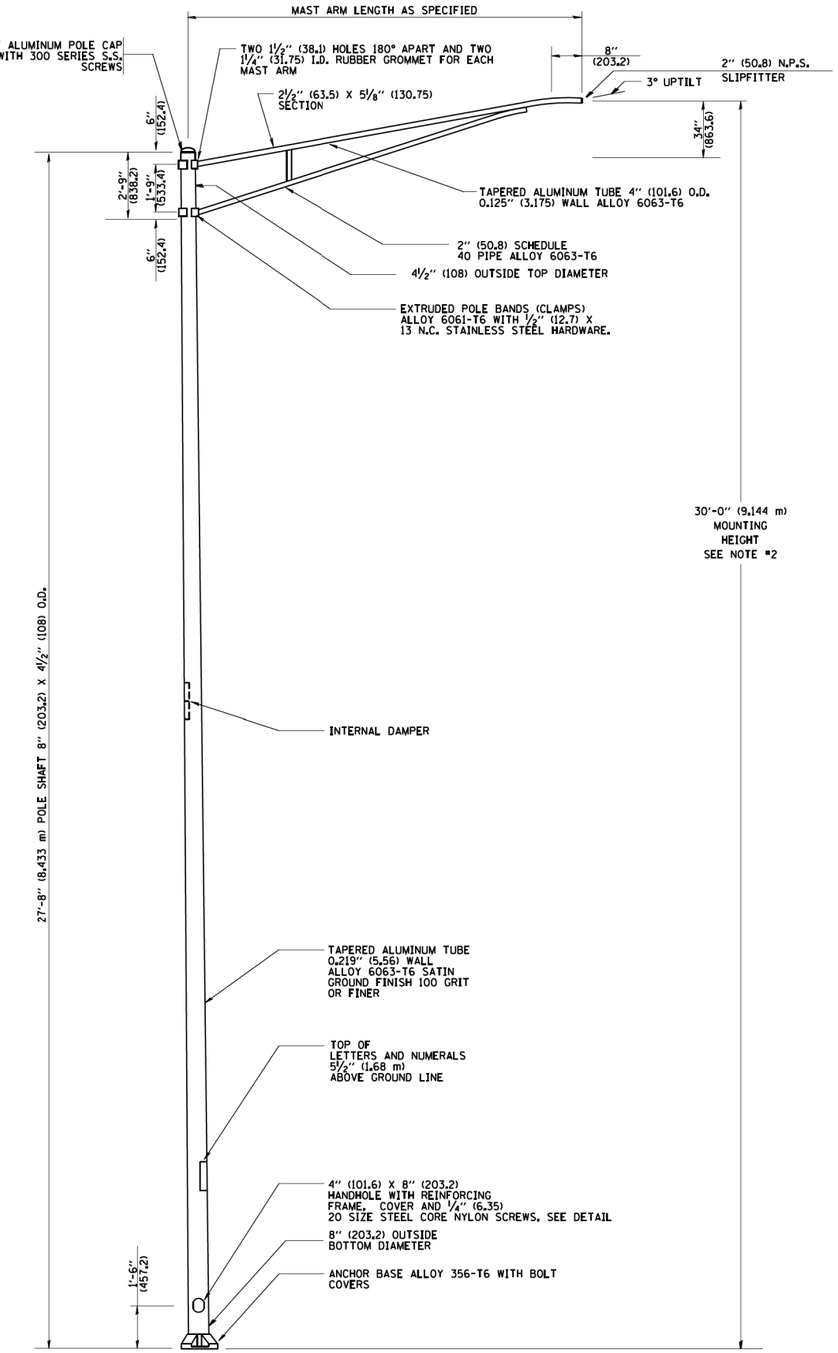

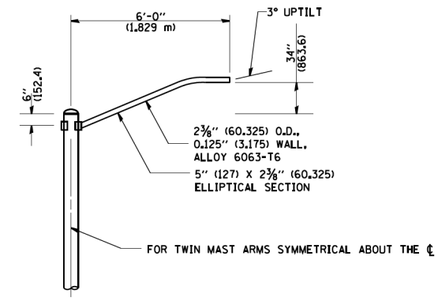

6' (1.8 m) SINGLE MEMBER MAST ARM

(N.T.S.)

NOTES:

1. ALL DIMENSIONS ARE IN INCHES (MILLIMETERS) UNLESS OTHERWISE SHOWN.
2. MOUNTING HEIGHT IS DEFINED AS THE DISTANCE FROM THE CENTERLINE OF THE TENON TO THE BOTTOM OF THE ANCHOR BASE.
3. THE LIGHT POLE WILL MEET AASHTO DESIGN CRITERIA AS SPECIFIED.
4. THE INSTALLING CONTRACTOR WILL PROVIDE A UL LISTED GROUNDING CONNECTOR. BURNDY K2C23, T&B SP4DL OR APPROVED EQUAL.
5. LIGHT POLES WILL NOT BE INSTALLED WITHOUT MAST ARMS AND LUMINAIRES.
6. LIGHT POLES WILL BE SET PLUMB ON THE FOUNDATION WITHOUT THE USE OF LEVELING NUTS, WASHERS OR SHIMS.
7. LIGHTING UNIT IDENTIFICATION NUMBERS SHALL BE INSTALLED BEFORE THE LIGHTING UNIT IS ENERGIZED.

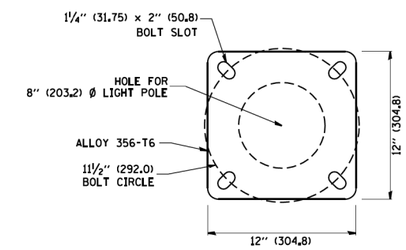

LIGHT POLE BASE PLATE DETAIL

11½" (292.0) BOLT CIRCLE

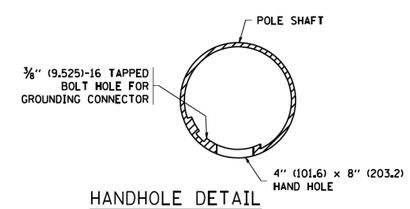

HANDHOLE DETAIL

(N.T.S.)

C:\Users\kendrabant\Desktop\New folder (10)\CADD\D162B16-sht-light-07.dgn
$DATE$ 9:59:05 AM

GANDHI AND ASSOCIATES, INC. ENGINEERS AND PLANNERS 6505 N. NORTHWEST HIGHWAY SUITE 300 CHICAGO, ILLINOIS 60631 TEL.(773)774-5900	USER NAME = Kendrabant	DESIGNED - BR	REVISED -	STATE OF ILLINOIS DEPARTMENT OF TRANSPORTATION	IL ROUTE 58 (GOLF RD) AND WOLF ROAD LIGHTING DETAILS	F.A.P. RTE.	SECTION	COUNTY	TOTAL SHEETS	SHEET NO.
		DRAWN - MA	REVISED -			339	583-R	COOK	186	141
	PLOT SCALE = 100.0000 ' / in.	CHECKED - PV	REVISED -					CONTRACT NO. 62B16		
	PLOT DATE = 10/20/2017	DATE - 8/23/2017	REVISED -		SCALE: N.T.S. SHEET 8 OF 9 SHEETS STA. TO STA.		ILLINOIS FED. AID PROJECT			

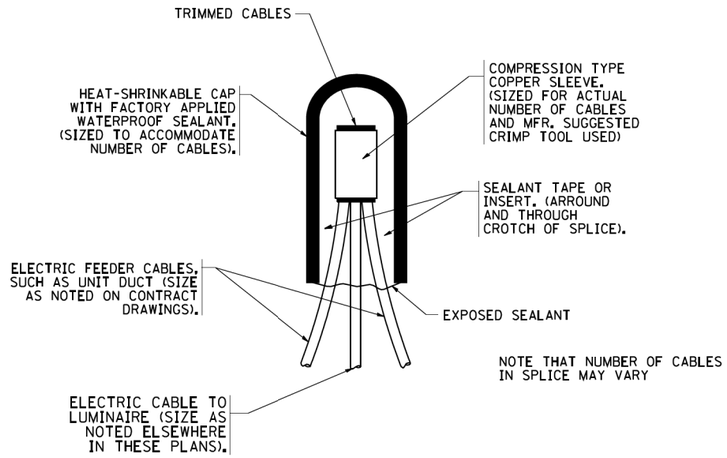

TYPICAL SPLICE DETAIL

N.T.S.

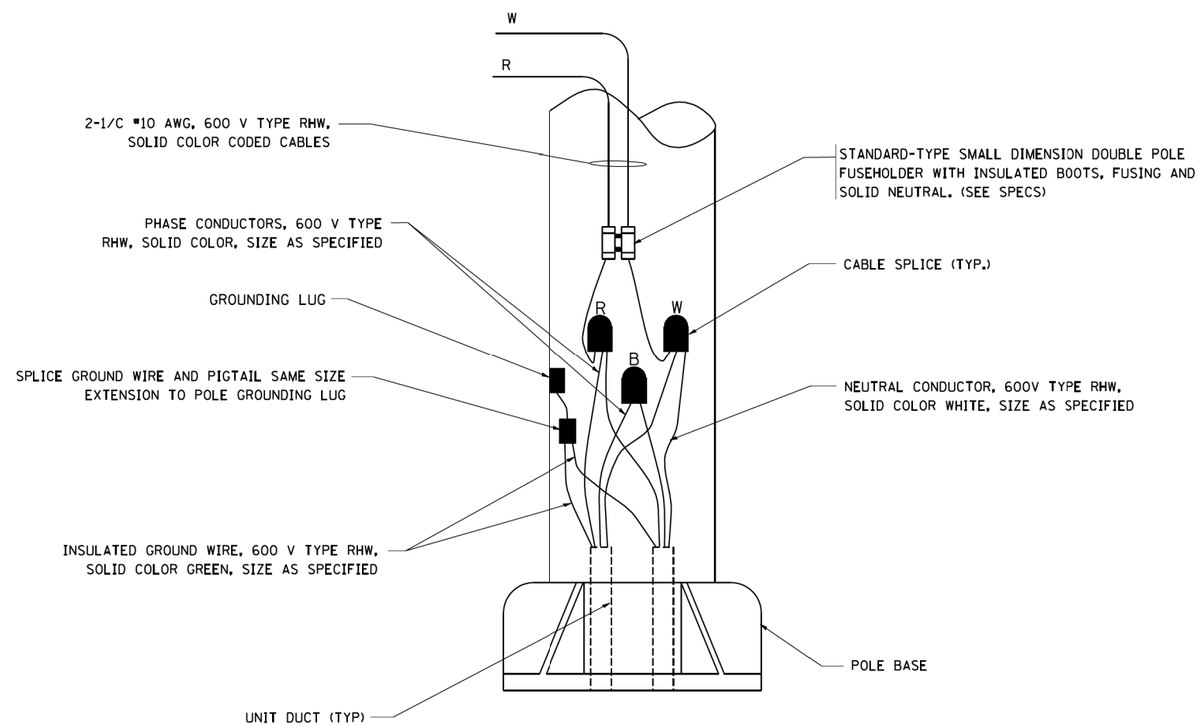

POLE WIRING DETAIL

N.T.S.

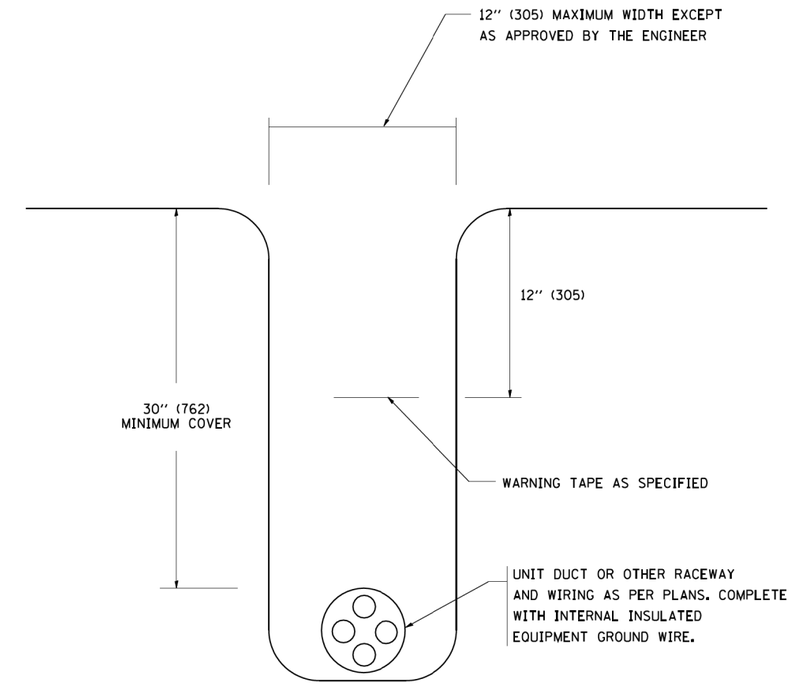

TYPICAL WIRING IN TRENCH DETAIL

N.T.S.

C:\Users\kendrabant\Desktop\New folder (10)\CADD\D162B16-sht-light-08.dgn
$DATE$ 9:59:16 AM

GANDHI AND ASSOCIATES, INC. ENGINEERS AND PLANNERS 6035 NORTHWEST HIGHWAY SUITE 300 CHICAGO, ILLINOIS 60631 TEL.(773)774-5900	USER NAME = Kendrabant	DESIGNED - BR	REVISED -	STATE OF ILLINOIS DEPARTMENT OF TRANSPORTATION	IL ROUTE 58 (GOLF RD) AND WOLF ROAD LIGHTING DETAILS
		DRAWN - MA	REVISED -		
	PLOT SCALE = 100.0000 ' / in.	CHECKED - PV	REVISED -		
	PLOT DATE = 10/20/2017	DATE - 8/23/2017	REVISED -		SCALE: N.T.S. SHEET 9 OF 9 SHEETS STA. TO STA.

F.A.P. RTE.	SECTION	COUNTY	TOTAL SHEETS	SHEET NO.
339	583-R	COOK	186	142
		CONTRACT NO. 62B16		
		ILLINOIS FED. AID PROJECT		

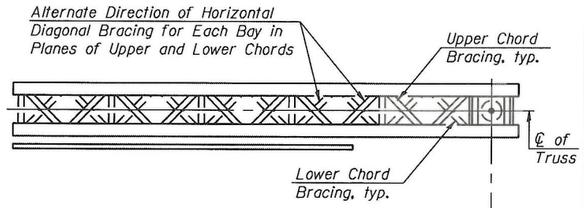

TYPICAL PLAN

(Walkway not shown)

Structure Number	Station	Design Truss Type	Cantilever Length (L)	Elev. A	Dim. D	D_s	Total Sign Area
GOLF RD (EAST LEG)							
1C016S058L000.0-000	67+85.00 *	II-C-A	30' - 0"	647.15	5' - 9"	8' - 6"	127.5
	(35.25 LT)						
GOLF RD (SOUTHWEST LEG)							
1C016S058R000.0-000	56+15.11 **	III-C-A	37' - 0"	639.29	15' - 9"	8' - 0"	108
	(42.52 RT)						

*MEASURED ALONG GOLF RD (EAST LEG) EXISTING BASELINE
**MEASURED ALONG GOLF RD (SOUTHWEST LEG) EXISTING BASELINE

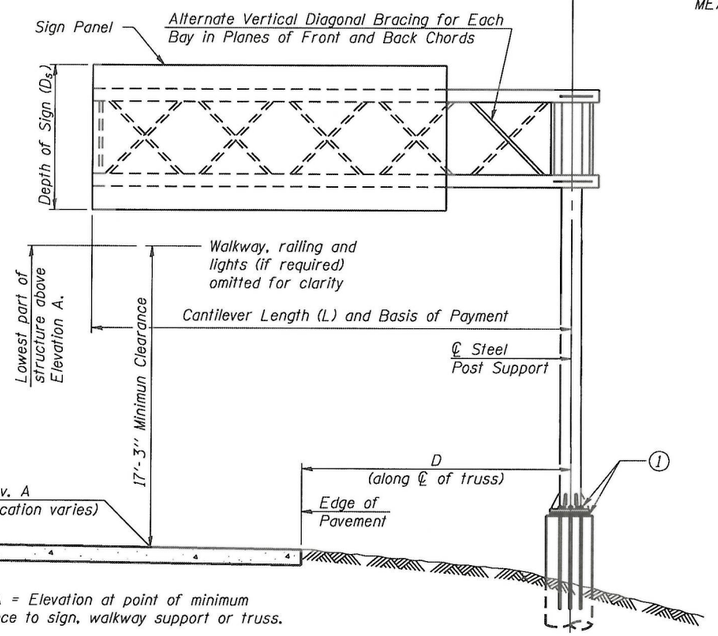

Elev. A = Elevation at point of minimum clearance to sign, walkway support or truss.

TYPICAL ELEVATION

Looking in Direction of Traffic

Truss Type	Maximum Sign Area	Maximum Length
I-C-A	170 Sq. Ft.	25 Ft.
II-C-A	340 Sq. Ft.	30 Ft.
III-C-A	400 Sq. Ft.	40 Ft.

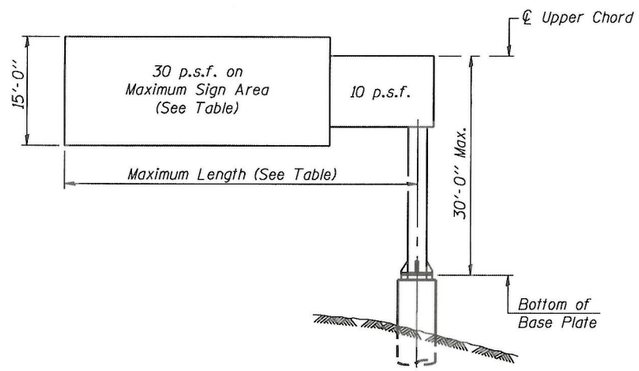

DESIGN WIND LOADING DIAGRAM

Parameters shown are basis for I.D.O.T. Standards Installations not within dimensional limits shown require special analysis for all components.

Sign support structures may be subject to damaging vibrations and oscillations when sign panels are not in place during erection or maintenance of the structure. To avoid these vibrations and oscillations, consideration should be given to attaching temporary blank sign panels to the structure.

STATE OF ILLINOIS
MOUSSA A. ISSA
081-005738
CHICAGO, ILLINOIS
LICENSED STRUCTURAL ENGINEER

Signed Moussa A. Issa
Dr. Moussa A. Issa, S.E.
Il. Lic. No. 081-005738
Expires 11-30-2018

Date November 28, 2017
For Sheets 143 Thru 150

Note:
Trusses shall be shipped individually with adequate provision to prevent detrimental motion during transport. This may require ropes between horizontals and diagonals or energy dissipating (elastic) ties to the vehicle. The contractor is responsible for maintaining the configuration and protection of the trusses.

(1) After adjustments to level truss and insure adequate vertical clearance, all top and leveling nuts shall be tightened against the base plate with a minimum torque of 200 lb.-ft. Stainless steel mesh shall then be placed around the perimeter of the base plate. Secure to base plate with stainless steel banding.

* If M270 Gr. 50W (M222) steel is proposed, chemistry for plate to be used shall first be approved by the Engineer as suitable for galvanizing and welding.

GENERAL NOTES

DESIGN: AASHTO Standard Specifications for Structural Supports for Highway Signs, Luminaires and Traffic Signals. ("AASHTO Specifications")

CONSTRUCTION: Current (at time of letting) Illinois Department of Transportation Standard Specifications for Road and Bridge Construction, Supplemental Specifications and Special Provisions. ("Standard Specifications")

LOADING: 90 M.P.H. WIND VELOCITY

WALKWAY LOADING: Dead load plus 500 lbs. concentrated live load.

DESIGN STRESSES:
Field Units
f'_c = 3,500 p.s.i.
fy = 60,000 p.s.i. (reinforcement)

WELDING: All welds to be continuous unless otherwise shown. All welding to be done in accordance with current AWS D1.1 and D1.2 Structural Welding Codes (Steel and Aluminum) and the Standard Specificiations.

MATERIALS: Aluminum Alloys as shown throughout plans. All Structural Steel Pipe shall be ASTM A53 Grade B or A500 Grade B or C. If A500 pipe is substituted for A53, then the outside diameter shall be as detailed and wall thickness greater than or equal to A53.
All Structural Steel Plates and Shapes shall conform to AASHTO M270 Gr. 36, Gr. 50 or Gr. 50W*. Stainless steel for shims, sleeves and handhole covers shall be ASTM A240, Type 302 or 304, or another alloy suitable for exterior exposure and acceptable to the Engineer.
The steel pipe and stiffening ribs at the base plate for the column shall have a minimum longitudinal Charpy V-Notch (CVN) energy of 15 lb.-ft. at 40° F. (Zone 2) before galvanizing.

FASTENERS FOR ALUMINUM TRUSSES: All bolts noted as "high strength" must satisfy the requirements of AASHTO M164 (ASTM A325), or approved alternate, and must have matching lock nuts. Threaded studs for splices (if Members interfere) must satisfy the requirements of ASTM A449, ASTM A193, Grade B7, or approved alternate, and must have matching lock nuts. Bolts and lock nuts not required to be high strength must satisfy the requirements of ASTM A307. All bolts and lock nuts must be hot dip galvanized per AASHTO M232. The lock nuts must have nylon or steel inserts. A stainless steel flat washer conforming to ASTM A240 Type 302 or 304, is required under both head and nut or under both nuts where threaded studs are used. High strength bolt installation shall conform to Article 505.04 (f) (2)d of the IDOT Standard Specifications for Road and Bridge Construction. Rotational capacity ("ROCAP") testing of bolts will not be required.

U-BOLTS AND EYEBOLTS: U-Bolts and Eyebolts must be produced from ASTM A276 Type 304, 304L, 316 or 316L, Condition A, cold finished stainless steel, or an equivalent material acceptable to the Engineer. All nuts for U-Bolts and Eyebolts must be lock nuts equivalent to ASTM A307 with nylon or steel inserts and hot dip galvanized per AASHTO M232. A stainless steel flat washer conforming to ASTM A240, Type 302 or 304, is required under each U-Bolt and Eyebolt lock nut.

GALVANIZING: All Steel Grating, Plates, Shapes and Pipe shall be Hot Dip Galvanized after fabrication in accordance with AASHTO M111. Painting is not permitted.

ANCHOR RODS: Shall conform to ASTM F1554 Gr. 105.

CONCRETE SURFACES: All concrete surfaces above an elevation 6" below the lowest final ground line at each foundation shall be cleaned and coated with Concrete Sealer in accordance with the Standard Specifications.

REINFORCEMENT BARS: Reinforcement Bars designated (E) shall be epoxy coated in accordance with the Standard Specifications.

FOUNDATIONS: The contract unit price for Drilled Shaft Concrete Foundations shall include reinforcement bars complete in place.

TOTAL BILL OF MATERIAL

ITEM	UNIT	TOTAL
OVERHEAD SIGN STRUCTURE CANTILEVER TYPE II-C-A	Foot	30
OVERHEAD SIGN STRUCTURE CANTILEVER TYPE III-C-A	Foot	37
OVERHEAD SIGN STRUCTURE WALKWAY, TYPE A	Foot	N/A
DRILLED SHAFT CONCRETE FOUNDATIONS	Cu. Yds.	22.3

OSC-A-1 8-21-13

P:\1501-638 W07 Cumberland Circle\CADD Sheets\0162B16-sht-369-OSC-A-1-GPE.dgn

HBM ENGINEERING GROUP, LLC

USER NAME = Kendrabant	DESIGNED - JMG	REVISED - 12/01/2017
	DRAWN - JMG	REVISED -
PLOT SCALE = 2.0000 ' / in.	CHECKED - JJS	REVISED -
PLOT DATE = 12/1/2017	DATE - 10/17/2017	REVISED -

STATE OF ILLINOIS
DEPARTMENT OF TRANSPORTATION

CANTILEVER SIGN STRUCTURES - GENERAL PLAN & ELEVATION
ALUMINUM TRUSS & STEEL POST

SCALE: SHEET 1 OF 8 SHEETS STA. TO STA.

F.A.P. RTE.	SECTION	COUNTY	TOTAL SHEETS	SHEET NO.
339	583-R	COOK	186	143

CONTRACT NO. 62B16
ILLINOIS FED. AID PROJECT

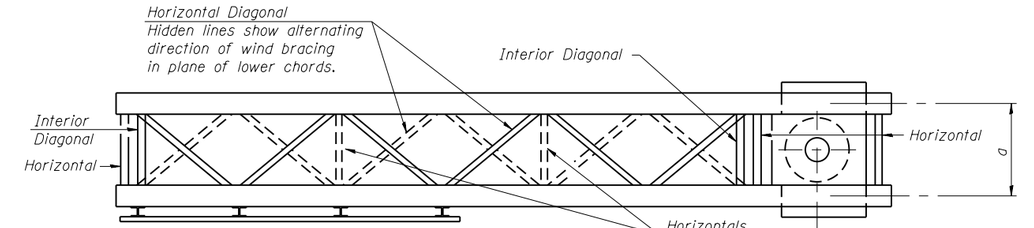

PLAN
(Walkway not shown)

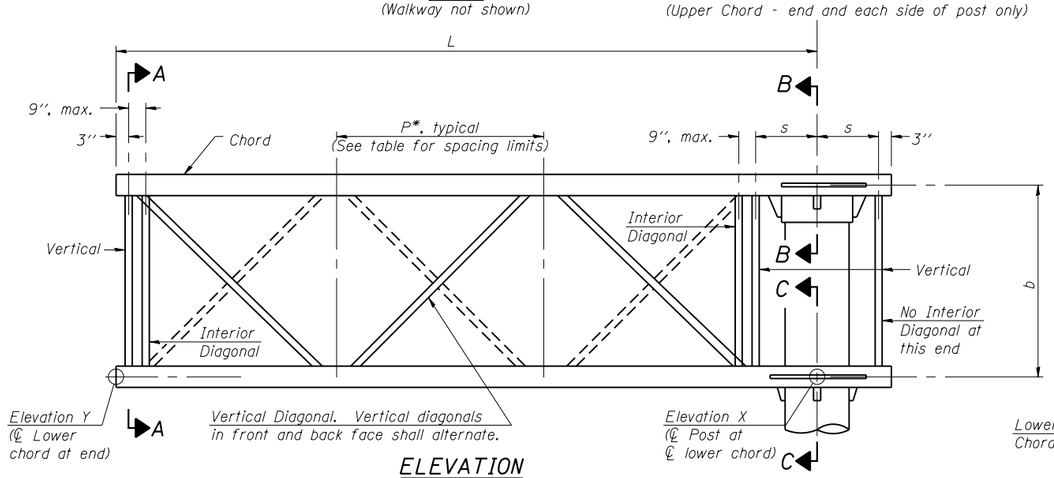

ELEVATION
(Sign and walkway omitted for clarity)

TYPICAL TRUSS UNIT

For Section B-B and Section C-C, see Base Sheet OSC-A-3.

Note:
There are twice as many horizontal diagonals as there are vertical diagonals.

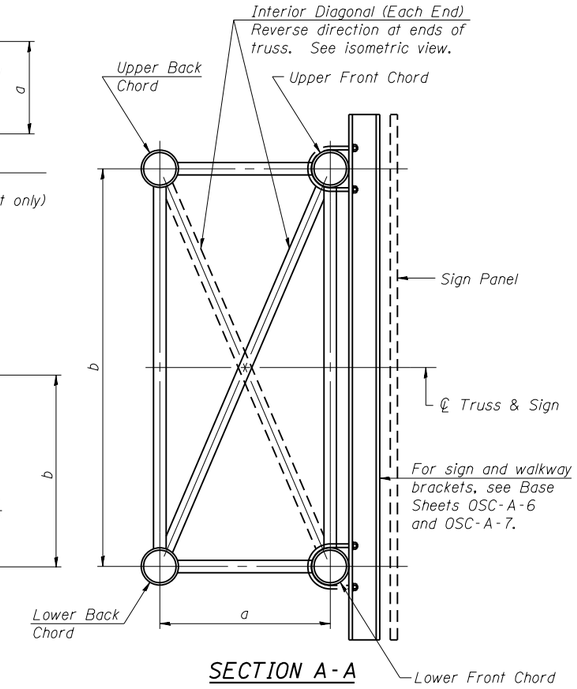

SECTION A-A

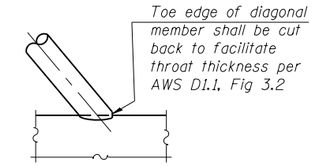

DETAIL A

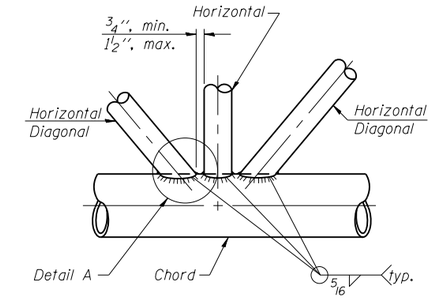

TRUSS INTERIOR JOINT DETAIL

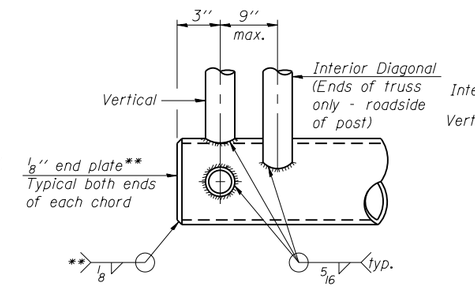

CANTILEVER END JOINT DETAIL

** Contractor may alternatively use standard aluminum drive-fit cap to close ends. 1/2'' ϕ Drain hole in end plate / drive-fit cap.

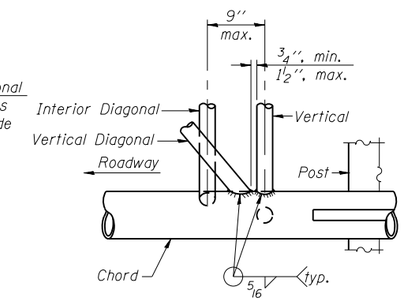

POST END JOINT DETAIL

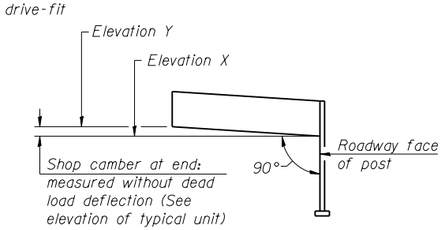

CAMBER DIAGRAM
(For Fabrication Only)

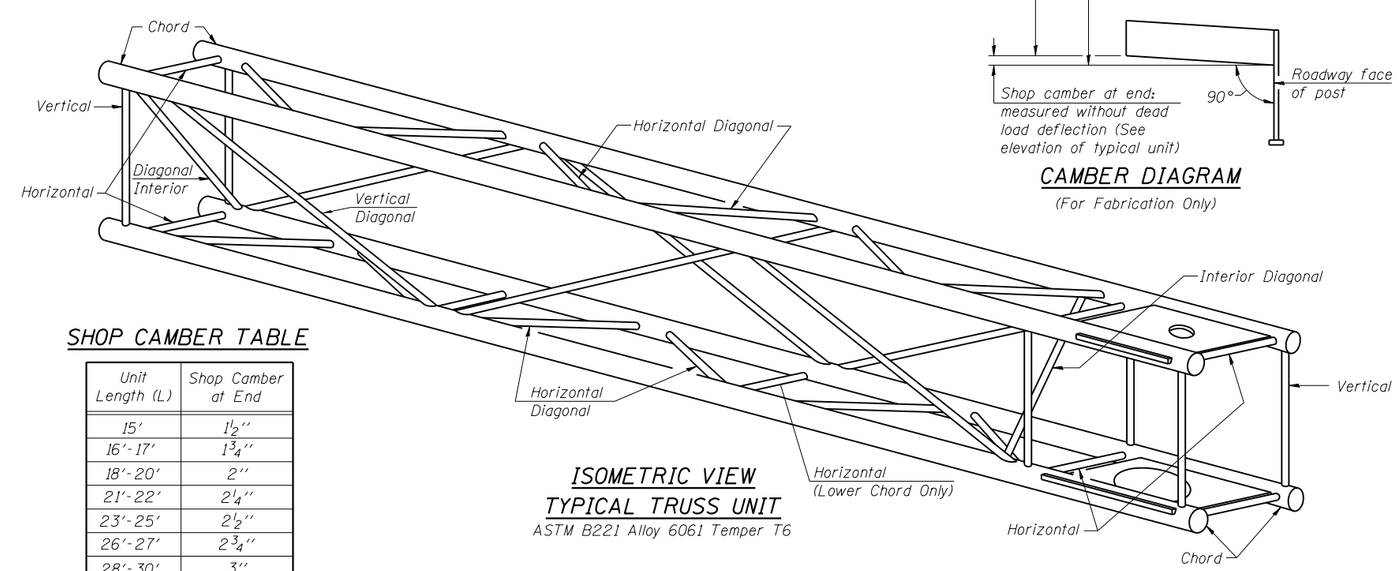

ISOMETRIC VIEW
TYPICAL TRUSS UNIT
ASTM B221 Alloy 6061 Temper T6

TRUSS UNIT TABLE

Truss Type	Dimension "a"	Dimension "b"	Dimension "s"	Limits for Panel Spacing (P)*	Up. & Low. Chord		Verticals; Horizontals; Vertical, Horizontal, and Interior Diagonals	
					O.D.	Wall	O.D.	Wall
I-C-A	24''	54''	16''	36'' min. to 48'' max.	5''	5/16''	2 1/2''	5/16''
II-C-A	36''	66''	21''	42'' min. to 54'' max.	6 1/2''	5/16''	3 1/4''	5/16''
III-C-A (35' Max.)	36''	84''	21''	48'' min. to 66'' max.	7''	3/8''	3 1/2''	3/8''
III-C-A (>35' to 40')	36''	84''	21''	48'' min. to 66'' max.	8''	3/8''	3 1/2''	3/8''

$$*P = \frac{L - s - 3''}{\#\ Panels}$$

Structure Number	Station	Truss Type	Design Length (L)	Number of Panels Per Unit	Panel Length (P)*
GOLF EAST LEG					
1C016S058L000.0-000	67+85.00 (35.25 Lt)*	II-C-A	30' - 0"	7	4'-0"
GOLF SOUTHWEST LEG					
1C016S058R000.0-000	56+15.11 (42.52 RT)**	III-C-A	37' - 0"	7	5'-0"

*MEASURED ALONG GOLF RD (EAST LEG) EXISTING BASELINE
**MEASURED ALONG GOLF RD (SOUTHWEST LEG) EXISTING BASELINE

SHOP CAMBER TABLE

Unit Length (L)	Shop Camber at End
15'	1 1/2''
16'-17'	1 3/4''
18'-20'	2''
21'-22'	2 1/4''
23'-25'	2 1/2''
26'-27'	2 3/4''
28'-30'	3''
31'-32'	3 1/4''
33'-35'	3 1/2''
36'-37'	4''
38'-40'	4 1/2''

OSC-A-2 6-1-12

HBM ENGINEERING GROUP, LLC

USER NAME = Ken.drabant	DESIGNED - JMG	REVISED - 12/01/2017
	DRAWN - JMG	REVISED -
PLOT SCALE = 2.0000 ' / in.	CHECKED - JJS	REVISED -
PLOT DATE = 12/1/2017	DATE - 10/17/2017	REVISED -

STATE OF ILLINOIS
DEPARTMENT OF TRANSPORTATION

CANTILEVER SIGN STRUCTURES - TRUSS DETAILS
ALUMINUM TRUSS & STEEL POST

SCALE: SHEET 2 OF 8 SHEETS STA. TO STA.

F.A.P. RTE.	SECTION	COUNTY	TOTAL SHEETS	SHEET NO.
339	583-R	COOK	186	144
		CONTRACT NO. 62B16		
	ILLINOIS FED. AID PROJECT			

P:\1581-638 W07 Cumberland&Circle\CADD\Sheets\0162B16-sht-361-OSC-A-2-Truss Details.dgn

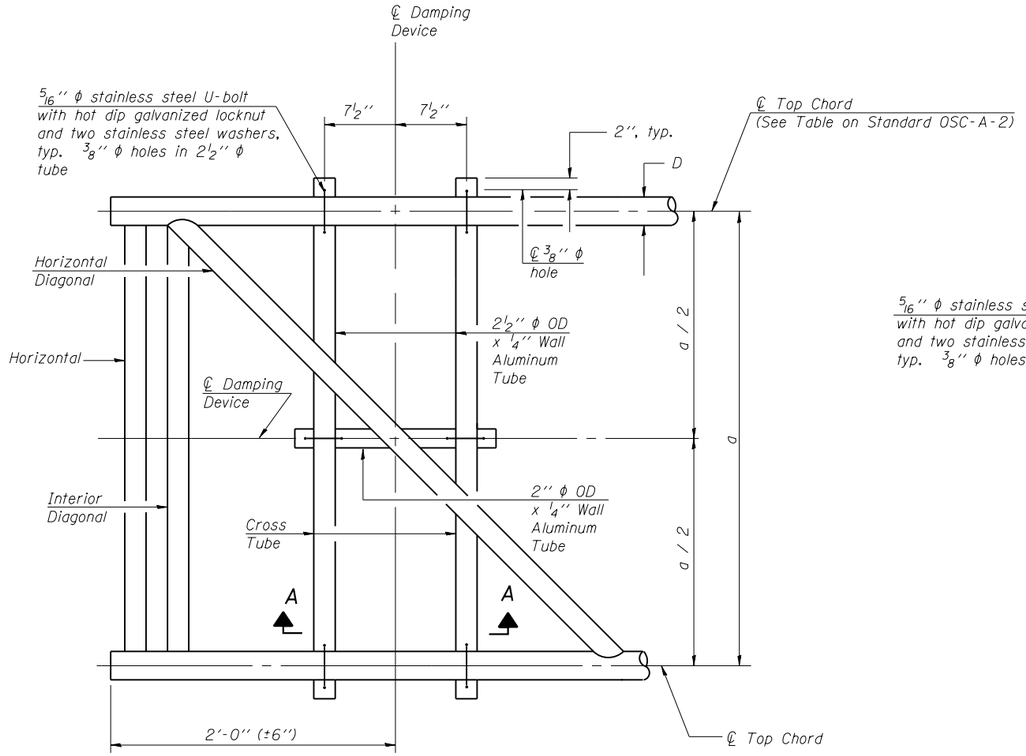

PLAN DETAIL

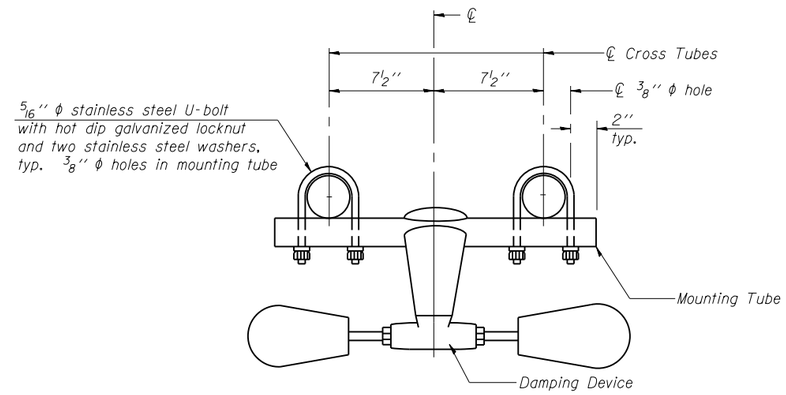

TRUSS DAMPING DEVICE CONNECTION DETAIL

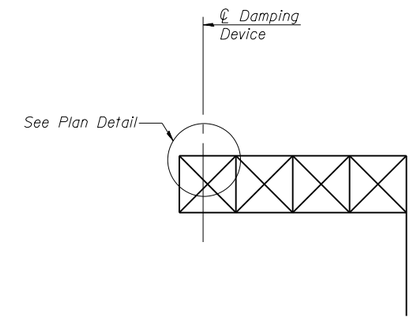

ELEVATION

Aluminum Cantilever Sign Structure

GENERAL NOTES

Damper: One damper per truss. (31 lbs. Stockbridge-Type Aluminum-29'' minimum between ends of weights)

Materials: Aluminum tubes shall be ASTM B221 alloy 6061 temper T6

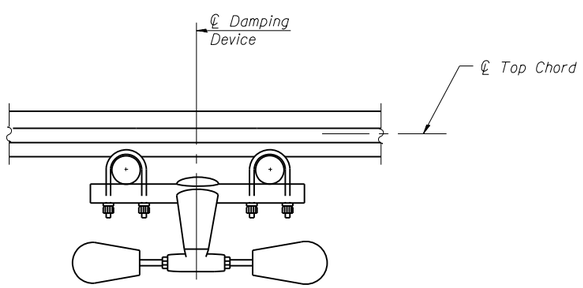

SECTION A-A

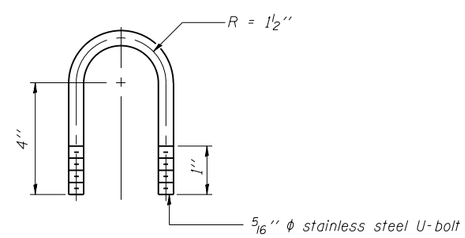

DAMPING DEVICE MOUNTING TUBE U-BOLT DETAIL

(Typical)

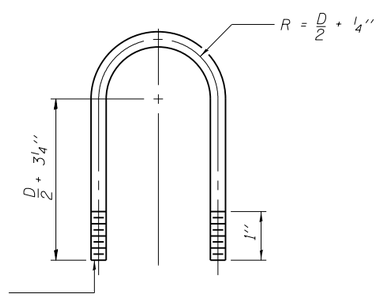

TOP CHORD TO CROSS TUBE U-BOLT DETAIL

(Typical)

OSC-A-D 6-1-12

HBM ENGINEERING GROUP, LLC	USER NAME = Ken.drabant	DESIGNED - IDOT	REVISED -
		DRAWN - IDOT	REVISED -
	PLOT SCALE = 2.0000 ' / in.	CHECKED - IDOT	REVISED -
	PLOT DATE = 10/20/2017	DATE - 10/17/2017	REVISED -

STATE OF ILLINOIS
DEPARTMENT OF TRANSPORTATION

CANTILEVER SIGN STRUCTURE
DAMPING DEVICE

SCALE: | SHEET 3 OF 8 SHEETS | STA. TO STA.

F.A.P. RTE.	SECTION	COUNTY	TOTAL SHEETS	SHEET NO.
339	583-R	COOK	186	145
		CONTRACT NO. 62B16		
		ILLINOIS FED. AID PROJECT		

P:\1501-630 WO7 Cumberland-Circle\CADD\Sheets\062B16-sht-362-OSC-D-Damping Device.dgn

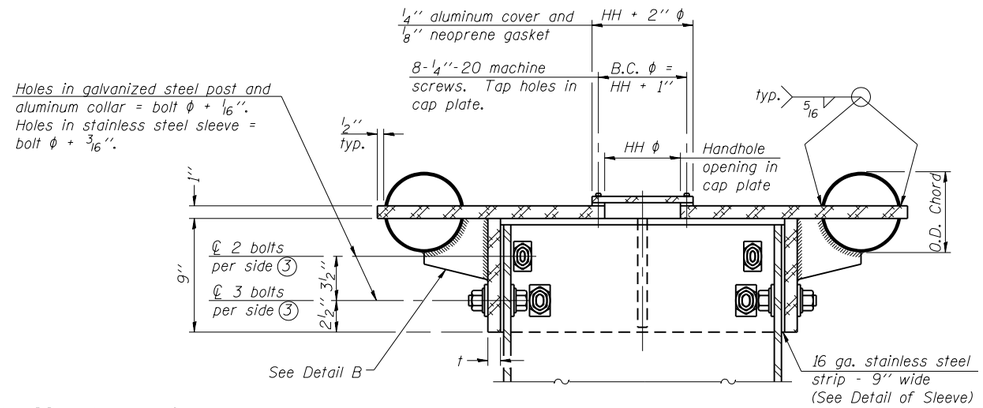

SECTION B-B

Bolts, washers (including contoured washers), and locknuts shall be stainless steel.

(4) Collar I.D. shall be manufactured to correspond to O.D. of actual galvanized post and stainless steel sleeve plus 1/8'' (±1/16''). Maximum gap between post and collar at any location equals 1/8'' before tightening bolts.

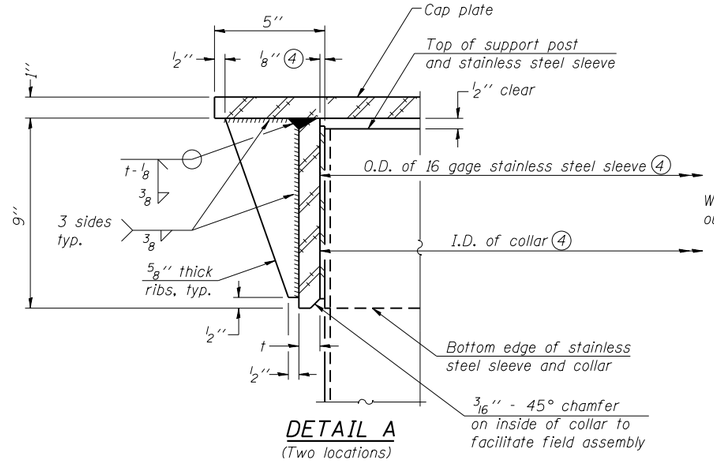

DETAIL A

(Two locations)

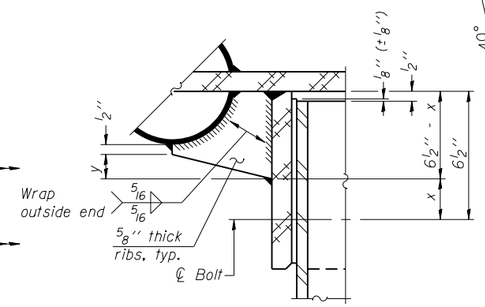

DETAIL B

Two locations
(For details not shown, see Detail C)

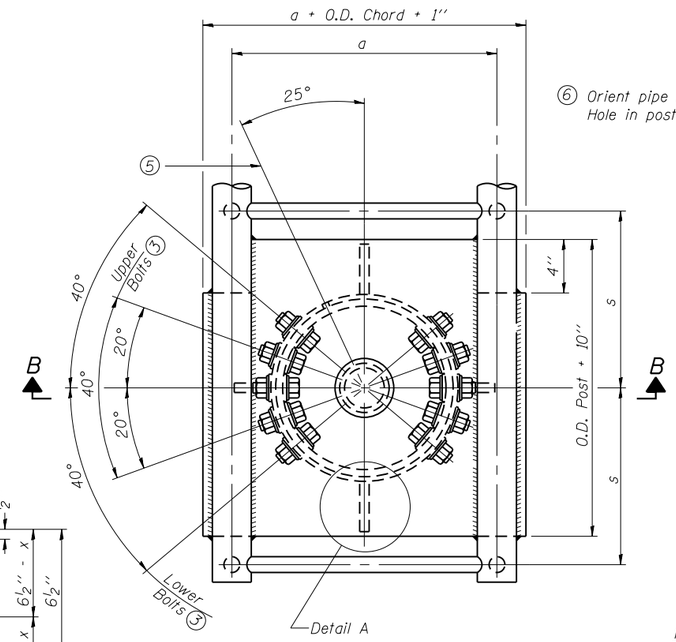

PLAN VIEW - TOP OF COLUMN

(5) Optional full penetration weld in collar. (Two locations maximum....(180° apart)....X-ray or UT 100%)

(6) Orient pipe toward walkway side. Hole in post = O.D. pipe + 1/8''.

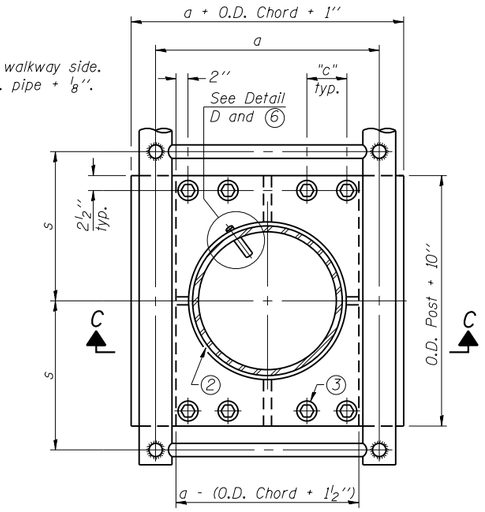

SECTION THRU POST ABOVE LOWER CHORDS

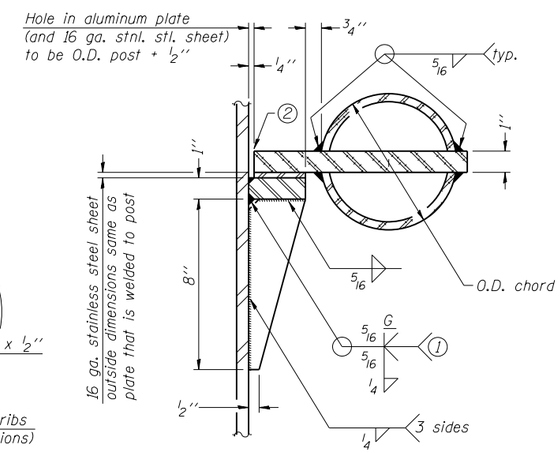

DETAIL C

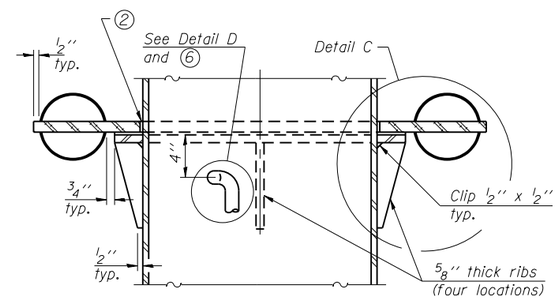

SECTION C-C

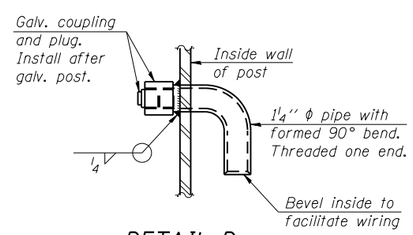

DETAIL D

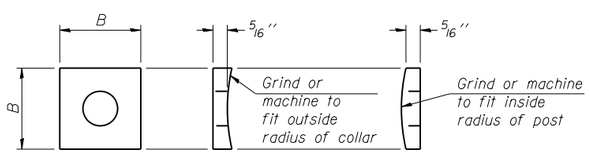

CONTOURED WASHERS

Bolt Size	Contoured Washers	
	Hole Dia.	B
7/8''	1''	2 1/2''
1''	1 1/8''	3''
1 1/4''	1 3/8''	3 1/4''

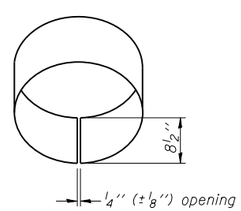

DETAIL OF STAINLESS STEEL SLEEVE

Weld to post after galvanizing. (Prepare post surface to insure tight, uniform fit and allow welding.) Welds to be 1 1/2'' long at 6'' cts. along top edge and at 1/4'' opening.

Truss Type	Post Size	Upper & Lower Connection Bolt Diameter (3)	Lower Juncture Bolt Spacing Dimension "c" (3)	Opening in Cap Plate "HH"	Collar Thickness (t)	Side Ribs	
						x	y
I-C-A	16'' ϕ (83#/')	7/8''	3 1/4''	8''	5/8''	1 3/4''	2 1/4''
II-C-A	24'' ϕ (125#/')	1''	3 1/2''	12''	7/8''	2''	1 1/4''
III-C-A (35' max.)	24'' ϕ (125#/')	1 1/4''	3 1/2''	12''	7/8''	2''	1''
III-C-A (>35' to 40')	24'' ϕ (171#/')	1 1/4''	3 1/2''	12''	7/8''	2''	1''

(1) Grind top if required to fully seat aluminum plate and stainless steel sheet.

(2) After tightening lower connection bolts, fill gap with non-hardening, silicone caulk suitable for exterior exposure and acceptable to the Engineer. Cost is included in Overhead Sign Structure Cantilever.

(3) Upper and lower connection bolts in collar and bolts at lower chord connection shall be high strength with matching locknuts. Connection bolts shall have 2 stainless steel flat washers each.

OSC-A-3 6-1-12

HBM ENGINEERING GROUP, LLC

USER NAME = Kendrabant	DESIGNED - IDOT	REVISED -
	DRAWN - IDOT	REVISED -
PLOT SCALE = 2.0000 ' / in.	CHECKED - IDOT	REVISED -
PLOT DATE = 10/20/2017	DATE - 10/17/2017	REVISED -

STATE OF ILLINOIS
DEPARTMENT OF TRANSPORTATION

CANTILEVER SIGN STRUCTURES - JUNCTURE DETAILS
ALUMINUM TRUSS & STEEL POST

SCALE: SHEET 4 OF 8 SHEETS STA. TO STA.

F.A.P. RTE.	SECTION	COUNTY	TOTAL SHEETS	SHEET NO.
339	583-R	COOK	186	146

CONTRACT NO. 62B16

ILLINOIS FED. AID PROJECT

P:\1501-630 W07 Cumberland Circle\CADD_Sheets\D162B16-sht-363-OSC-A-3-Juncture Details.dgn

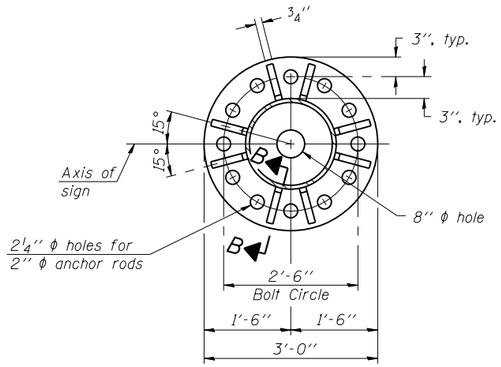

SECTION A-A

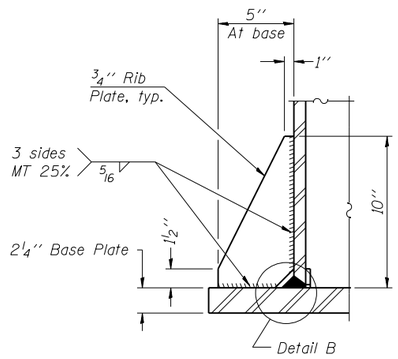

SECTION B-B

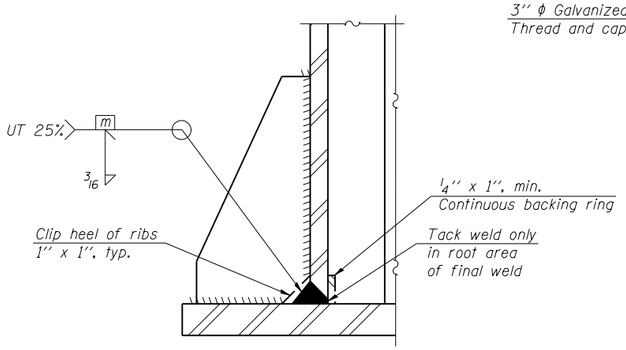

DETAIL B

(Typical rib)

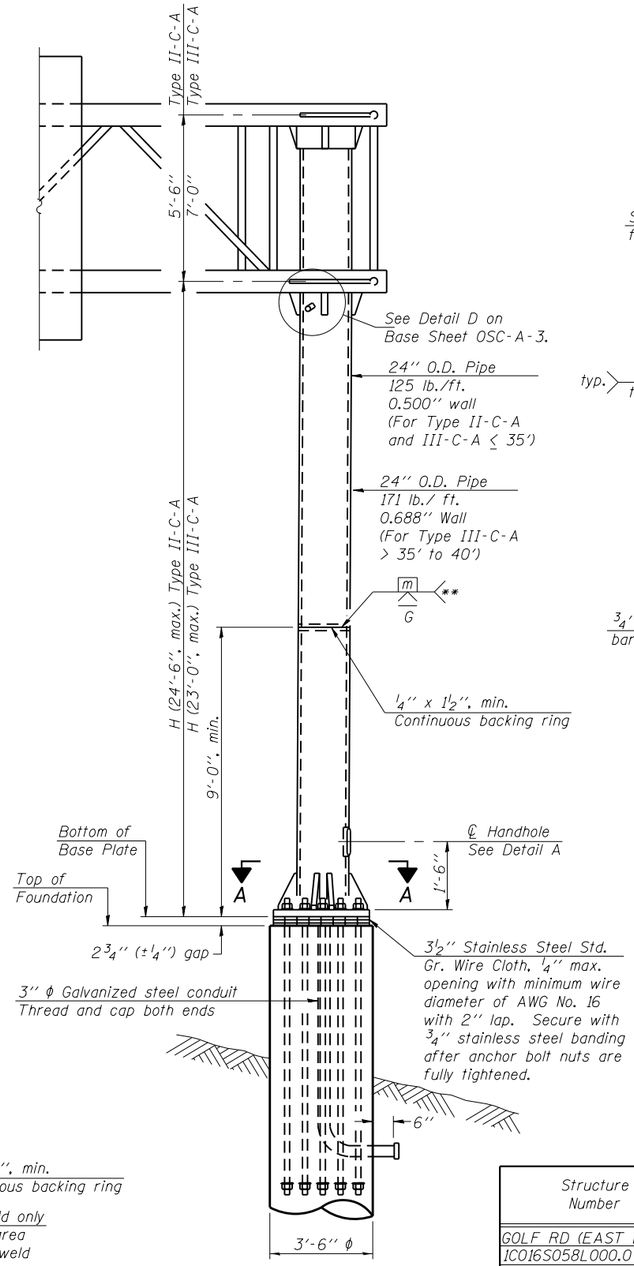

FRONT ELEVATION

For Foundation Details see Base Sheet OSC-A-9.

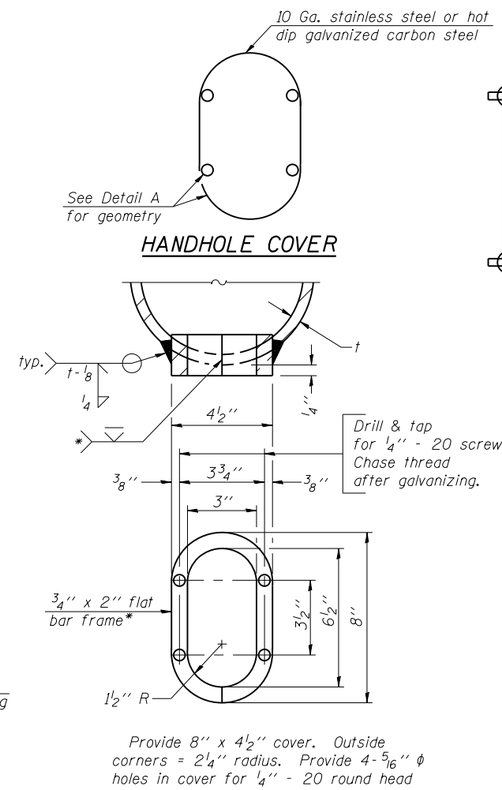

Provide 8'' x 4 1/2'' cover. Outside corners = 2 1/4'' radius. Provide 4-5/16'' ϕ holes in cover for 1/4'' - 20 round head hot dip galvanized or stainless steel machine screws. (See cover details.)

HANDHOLE COVER

DETAIL A

* Bent bars may be butt welded top and bottom or bottom only. In lieu of fabricated handhole frame as shown, may cut from 2'' plate (rolling direction vertical). All cut faces to be ground to ANSI Roughness of 500 μin or less.

** Butt welded joint in post is only allowed for post heights (H) over 20 ft. in length. If used, weld procedure must be preapproved by Engineer and joint shall receive 100% RT or UT (tension criteria) at Contractor's expense.

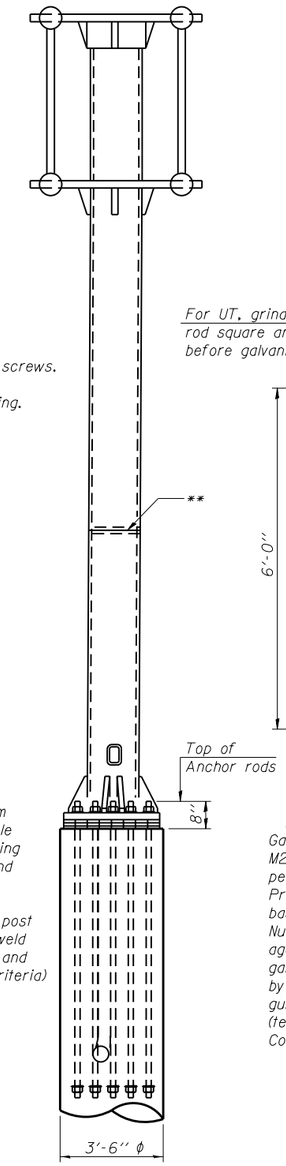

SIDE ELEVATION

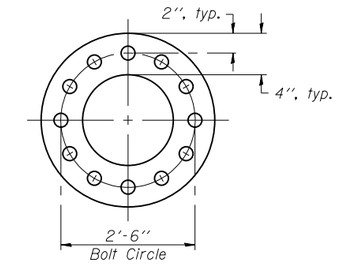

SUGGESTED POSITIONING PLATE

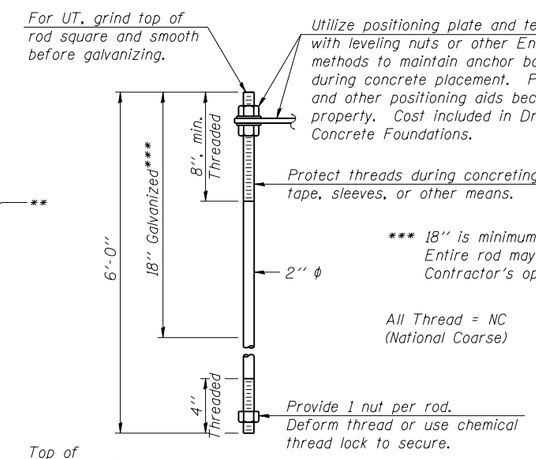

*** 18'' is minimum to be galvanized. Entire rod may be galvanized at Contractor's option.

All Thread = NC (National Coarse)

ANCHOR ROD DETAIL

Anchor rods shall conform to ASTM F1554 Grade 105. Galvanize the upper 18'' (minimum***) and associated AASHTO M291, Grade A, C or DH heavy hex nuts and hardened washers per AASHTO M232. No welding shall be permitted on rods. Provide a nut at bottom, a hexagon locknut and washer above base plate and a leveling nut and washer below base plate. Nuts shall each be tightened with 200 lb.-ft. minimum torque against base plate. Before or after threading, but before galvanizing, each anchor rod shall be ultrasonically tested (UT) by a Level II or III inspector, qualified in accord with ANSI guidelines, to insure no rejectable flaws exist in the upper 18'' (tension criteria). Cost of testing included in Drilled Shaft Concrete Foundations.

Structure Number	Station	H
GOLF RD (EAST LEG)		
1C016S058L000.0-000	67+85.00 (35.25 LT)*	18' - 3"
GOLF RD (SOUTHWEST LEG)		
1C016S058R000.0-000	56+15.11 (42.52 RT)**	14' - 0"

*MEASURED ALONG GOLF RD (EAST LEG) EXISTING BASELINE

**MEASURED ALONG GOLF RD (SOUTHWEST LEG) EXISTING BASELINE

Note: "H" based on 15'-0'' or actual sign height, whichever is greater.

OSC-A-5 6-1-12

HBM ENGINEERING GROUP, LLC

USER NAME = Ken.drabant	DESIGNED - JMG	REVISED - 12/01/2017	
	DRAWN - JMG	REVISED -	
PLOT SCALE = 2.0000 ' / in.	CHECKED - JJS	REVISED -	
PLOT DATE = 12/1/2017	DATE - 10/17/2017	REVISED -	

STATE OF ILLINOIS
DEPARTMENT OF TRANSPORTATION

CANTILEVER SIGN STRUCTURES - TYPE II-C-A & III-C-A
TRUSS SUPPORT POST - ALUMINUM TRUSS & STEEL POST

SCALE: SHEET 5 OF 8 SHEETS STA. TO STA.

F.A.P. RTE.	SECTION	COUNTY	TOTAL SHEETS	SHEET NO.
339	583-R	COOK	186	147
		CONTRACT NO. 62B16		
	ILLINOIS FED. AID PROJECT			

P:\1581-638 W07 Cumberland-Circle\CADD_Sheets\D162B16-sht-364-OSC-A-5-Post.dgn

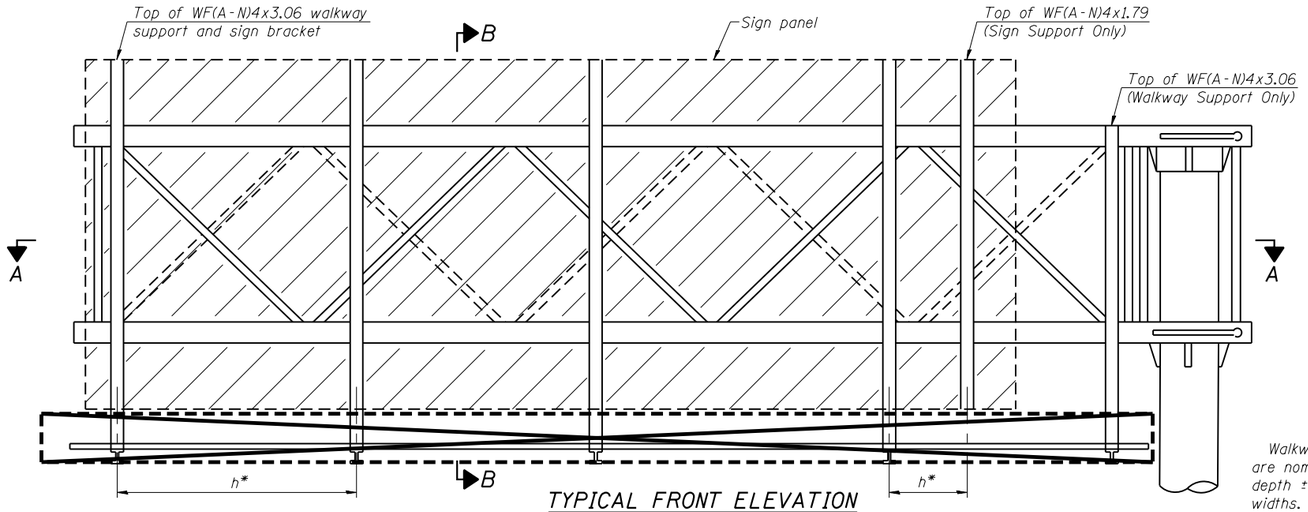

TYPICAL FRONT ELEVATION

With lights and handrail omitted for clarity.

Walkway and truss grating dimensions are nominal and may vary (width ±½", depth ±½") based on available standard widths.

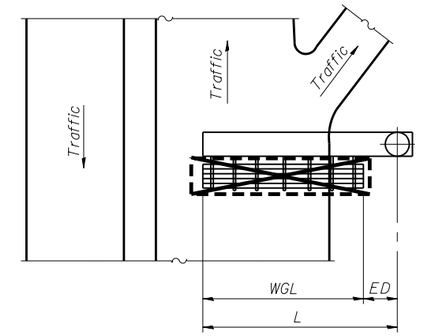

PLAN
WALKWAY AND HANDRAIL SKETCH

(Road plan beneath truss varies)

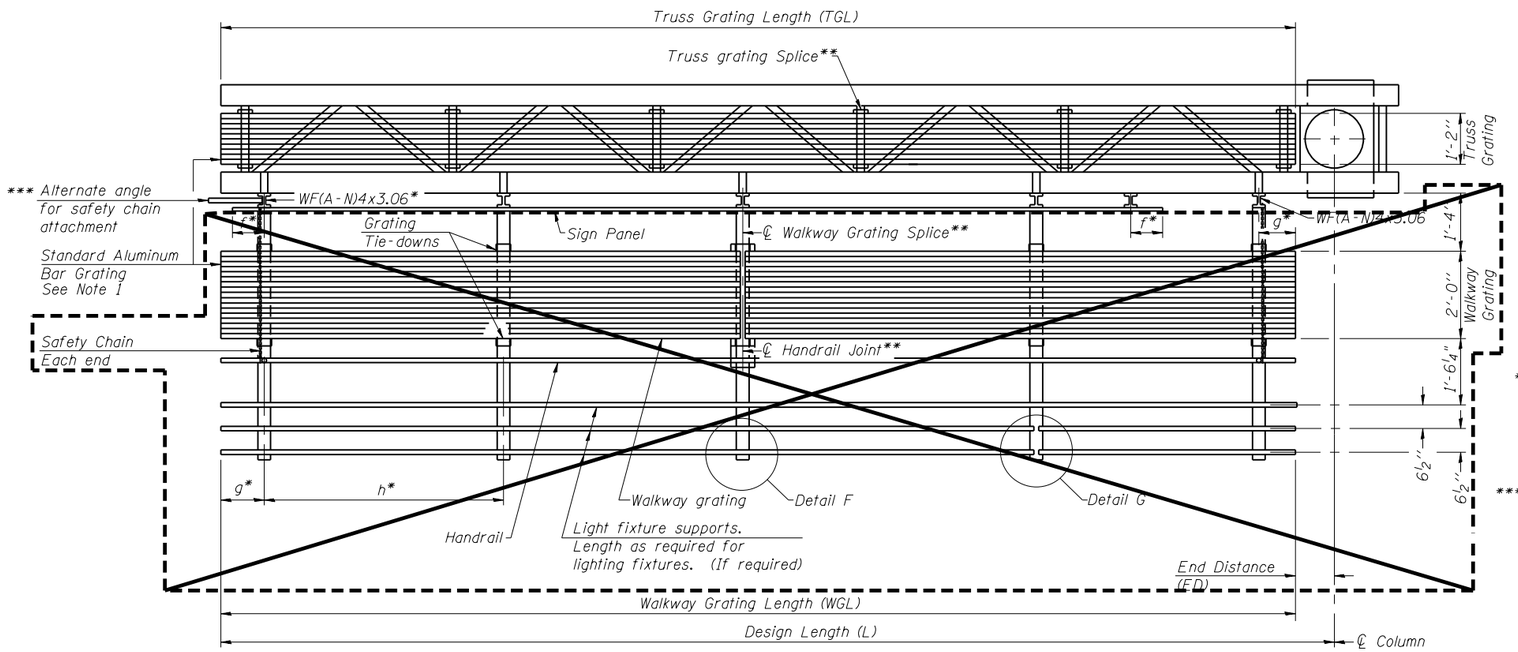

Structure Number	Station	WGL	ED	TGL
GOLF EAST LEG	67+85.00	N/A	N/A	28'
IC016S058L000.0-000	(35.25 Lt)			
GOLF SOUTHWEST LEG	56+15.11	N/A	N/A	35'
IC016S058R000.0-000	(42.52 RT)			

Notes:

* Space walkway brackets WF(A-N)4x3.06 and sign brackets WF(A-N)4x1.79 for efficiency and within limits shown:

f = 12" maximum, 4" minimum (End of sign to ℄ of nearest bracket)
g = 12" maximum, 4" minimum (End of walkway to ℄ of nearest bracket)
h = 6'-0" maximum (℄ to ℄ sign and/or walkway support brackets, WF(A-N)4x1.79 or WF(A-N)4x3.06)

*** If walkway bracket at safety chain location is behind sign, add angle to bracket. See alternate safety chain attachment on base sheet OSC-A-8

For details of sign placement, sign/walkway brackets, truss and walkway gratings, grating splices and Section B-B, see Base Sheet OSC-A-7.
For details of handrail, handrail joint, safety chain and Details F and G, see Base Sheet OSC-A-8.

SECTION A-A

Handrail and walkway grating shall span a minimum of three brackets between splices.
** Use and location of handrail joints or grating splices are optional, based on lengths needed and material availability.

$$TGL = L - \left(\frac{\text{Post O.D.}}{2} + 6''\right)$$

Truss grating to facilitate inspection shall run full length of cantilevers. Cost of truss grating is included in Overhead Sign Structure Cantilever.

BRACKET TABLE

WF(A-N)4x1.79 or WF(A-N)4x3.06 ASTM B308, Alloy 6061-T6		
Sign Width		Number Brackets Required
Greater Than	Less Than or Equal To	
	8'-0"	2
8'-0"	14'-0"	3
14'-0"	20'-0"	4
20'-0"	26'-0"	5
26'-0"	32'-0"	6

NOTE 1

Details For Standard 1'-2" Truss Grating is Applicable
Details for Walkway Grating Are Not Applicable

OSC-A-6 6-1-12

P:\1581-638 W07 Cumberland-Clarke\CADD Sheets\D162B16-sht-365-OSC-A-6-Aluminum Walkway details.dgn

HBM ENGINEERING GROUP, LLC

USER NAME = Ken.drabant	DESIGNED - JMG	REVISED - 12/01/2017
	DRAWN - JMG	REVISED -
PLOT SCALE = 2.0000 ' / in.	CHECKED - JJS	REVISED -
PLOT DATE = 12/1/2017	DATE - 10/17/2017	REVISED -

STATE OF ILLINOIS
DEPARTMENT OF TRANSPORTATION

CANTILEVER SIGN STRUCTURES – ALUMINUM WALKWAY
DETAILS – ALUMINUM TRUSS & STEEL POST

SCALE: SHEET 6 OF 8 SHEETS STA. TO STA.

F.A.P. RTE.	SECTION	COUNTY	TOTAL SHEETS	SHEET NO.
339	583-R	COOK	186	148
		CONTRACT NO. 62B16		
		ILLINOIS FED. AID PROJECT		

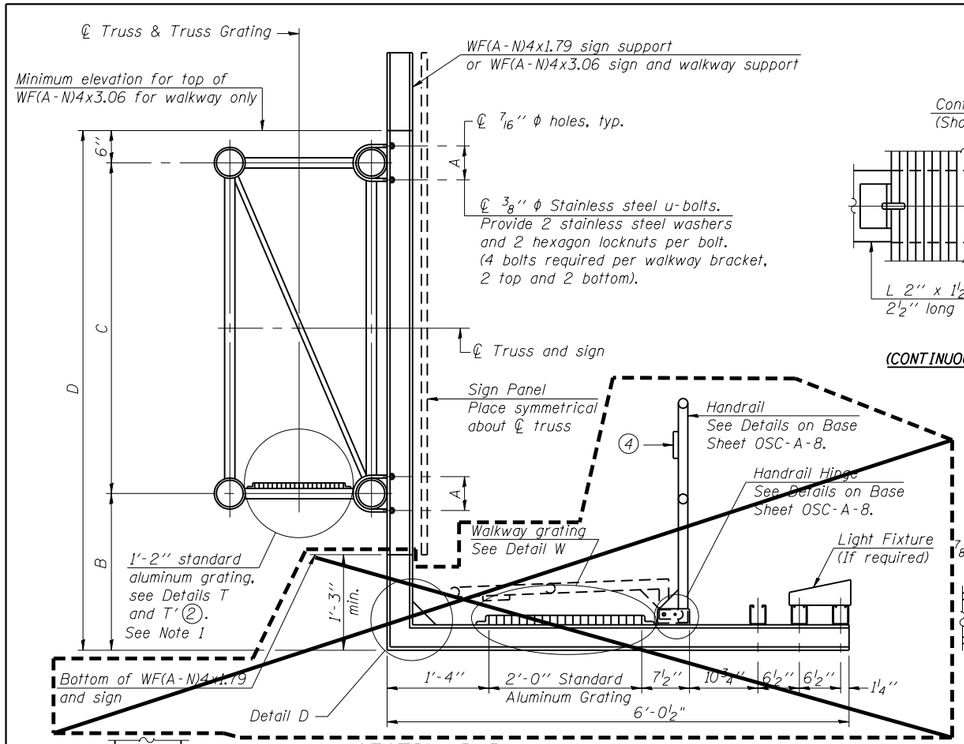

SECTION B-B

Sign shall be even with the top of the bracket, but it may extend no more than 6'' above the top of the bracket for field adjustments.

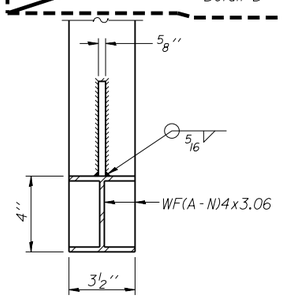

SECTION D-D

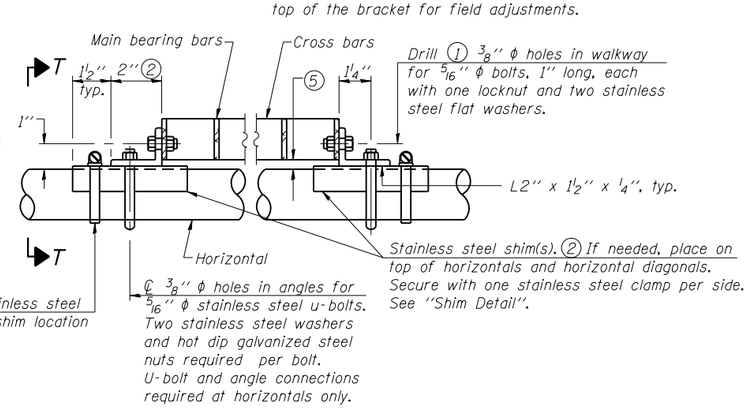

DETAIL T

(Continuous Truss grating)

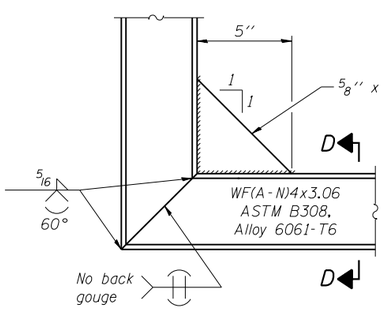

DETAIL D

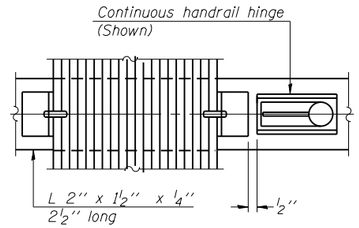

(CONTINUOUS WALKWAY GRATING)

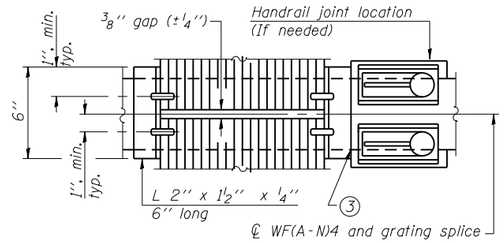

(AT WALKWAY GRATING SPLICE)

SECTION W-W

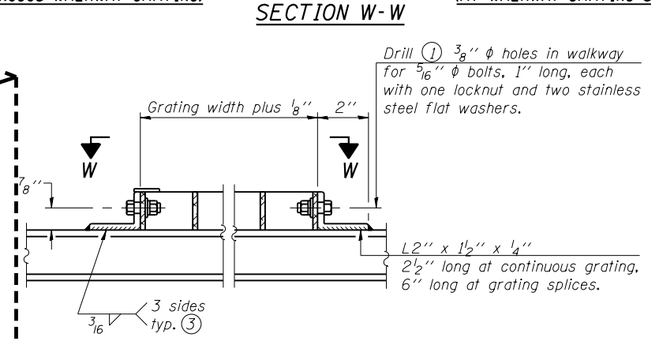

DETAIL W

(Walkway grating)

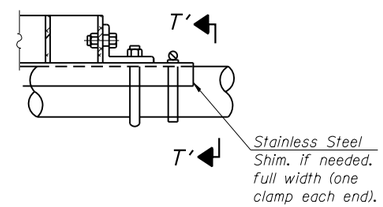

DETAIL T'

(Truss grating splice)

Details not shown same as Detail T.
Alternate materials may be used subject to the Engineer's review and approval.

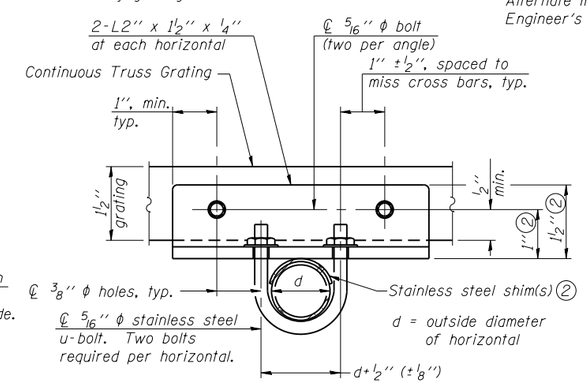

SECTION T-T

SPECIFICATIONS FOR STANDARD ALUMINUM GRATING

Main Bearing Bars (MBB) shall be 3/16'' x 1½'' on 1 3/16'' centers and conform to ASTM B211 Alloy 6061-T6.

Cross bars (CB) shall be 3/16'' x 1½'' on 4'' centers and conform to ASTM B221 Alloy 6063-T5 or 6061-T6.

OR

Aluminum Grating with modified "t" sections for main bearing bars shall meet the following requirements:

Main bars shall conform to ASTM B221 Alloy 6061-T6 and have a minimum section modulus equal to 0.0705 in.³ per bar, a depth of 1½'', spaced on 1 3/16'' centers.

Cross bars shall conform to ASTM B221 Alloy 6063-T5 or T-42 and spaced on 4'' centers.

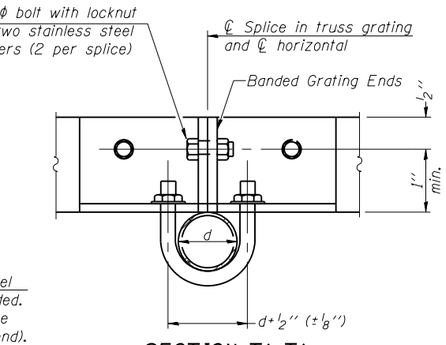

SECTION T'-T'

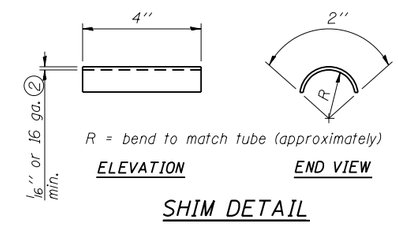

SHIM DETAIL

(1) Drilling holes in grating may be done in shop or field, based on Contractor's preference and subject to accurate alignment.

(2) Stainless steel shims shall be placed as shown in Detail T if needed to compensate for alignment variations between horizontal and diagonal pipes beyond adjustment provided by angles. Thicker shims may be used subject to shims performing properly.

(3) If Handrail Joint present, weld angle to WF(A-N)4 and ¼'' extension bars. (See Base Sheet OSC-A-8.)

(4) ℙ ⅛'' x ½'' x 2'' welded to handrail posts to protect locations that contact grating.

(5) Tube to grating gap may vary from 0 to ½'', max. to align walkway, allow for camber, etc.

(6) Based on actual sign height, D_S, given on OSC-A-1.

Structure Number	Station	A	(6) B	C	(6) D

NOTE 1

Details For Standard 1'-2" Truss Grating is Applicable
Details for Walkway Grating Are Not Applicable

OSC-A-7 6-1-12

P:\1501-630 WO7 Cumberland-Clark\CADD\Sheets\0162B16-sht-366-OSC-A-7-walkway details.dgn

HBM ENGINEERING GROUP, LLC

USER NAME = Ken.drabant	DESIGNED - JMG	REVISED -
	DRAWN - JMG	REVISED -
PLOT SCALE = 2.0000 ' / in.	CHECKED - JJS	REVISED -
PLOT DATE = 10/20/2017	DATE - 10/17/2017	REVISED -

STATE OF ILLINOIS
DEPARTMENT OF TRANSPORTATION

CANTILEVER SIGN STRUCTURES - WALKWAY DETAILS
ALUMINUM TRUSS & STEEL POST

SCALE: SHEET 7 OF 8 SHEETS STA. TO STA.

F.A.P. RTE.	SECTION	COUNTY	TOTAL SHEETS	SHEET NO.
339	583-R	COOK	186	149
		CONTRACT NO. 62B16		
		ILLINOIS FED. AID PROJECT		

* Grind anchor rod to bright finish at ground clamp location before installing clamp.

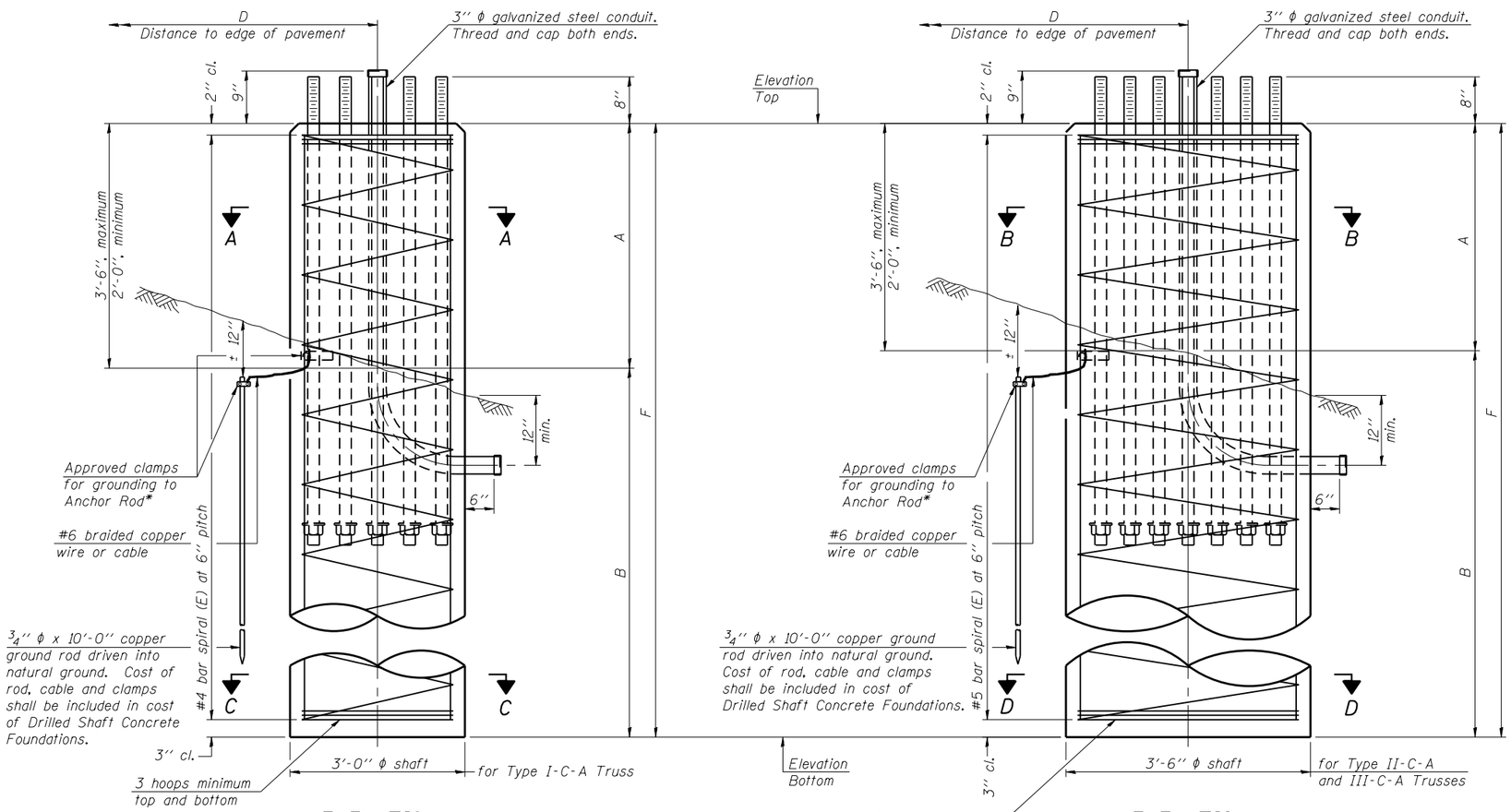

ELEVATION

ELEVATION

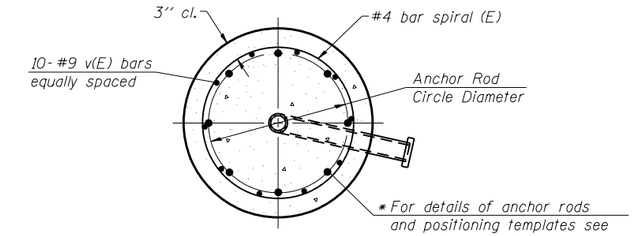

SECTION A-A
3'-0'' ϕ shaft

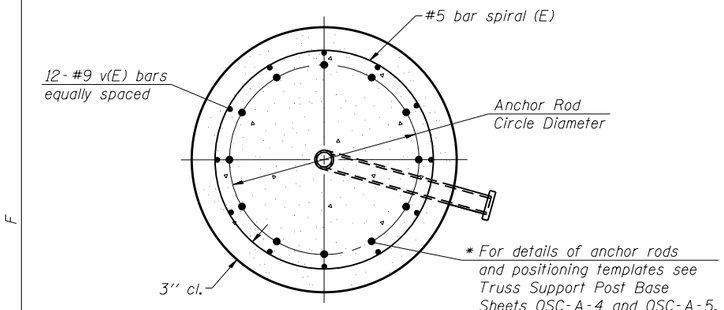

SECTION B-B
3'-6'' ϕ shaft

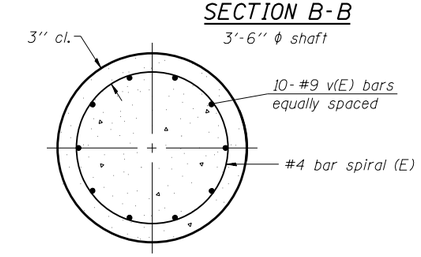

SECTION C-C
3'-0'' ϕ shaft

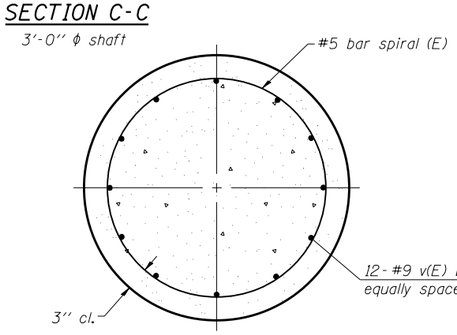

SECTION D-D
3'-6'' ϕ shaft

NOTES:

The foundation dimensions shown in the Foundation Design Table are based on the presence of mostly cohesive soils with an average Unconfined Compressive Strength (Qu) of at least 1.25 tsf, which must be determined by previous soil investigations at the jobsite. When other conditions are indicated, the boring data will be included in the plans and the foundation dimensions shown in the Foundation Data Table will be the result of site specific designs.

If the conditions encountered are different than those indicated, the Contractor shall notify the Engineer to determine if the foundation dimensions need to be modified. If dimensions "B" or "F" are revised by more than 12" by the Contractor, "as-built" plans shall be prepared and submitted to the District Bureau of Operations for future reference.

No sonotubes or decomposable forms shall be used below the lower conduit entrance. Permanent metal forms or other shielding may not be left in place below that elevation without the Engineer's written permission.

Concrete shall be placed monolithically, without construction joints.

Backfill shall be placed per Article 502 of Standard Specification and prior to erection of support column.

A normal surface finish followed by a Concrete Sealer application will be required on concrete surfaces above the lowest elevation 6" below finished ground line. Cost included in "Drilled Shaft Concrete Foundation".

Loose to medium dense, upper silty layers were encountered in Borings OSB-1 and OSB-2. Means and methods such as temporary casings per IDOT Standard Specification Article 516.06 shall be required to be in place at the site in order to construct the "Drilled Shaft Concrete Foundation" in the soil susceptible to caving.

FOUNDATION DESIGN TABLE

Truss Type	Post Base Sheet	Maximum CantileverLength (ft)	Maximum Total Sign Area (sq ft)	Shaft Diameter (in)	"B" Depth (ft)	Anchor Rods No.	Anchor Rods Diameter (in)	Anchor Rod Circle Diameter (in)
I-C-A	OSC-A-4	25	170	3.0	16.0	8	2	22
II-C-A	OSC-A-5	30	170	3.5	17.0	12	2	30
II-C-A	OSC-A-5	30	340	3.5	21.5	12	2	30
III-C-A	OSC-A-5	35	170	3.5	19.0	12	2	30
III-C-A	OSC-A-5	35	250	3.5	22.5	12	2	30
III-C-A	OSC-A-5	35	400	3.5	26.5	12	2	30
III-C-A	OSC-A-5	40	400	3.5	32.0	12	2	30

FOUNDATION DATA TABLE

Structure Number	Station	Truss Type	Shaft Diameter	Elevation Top	Elevation Bottom	Qu ***	A	B	F	Class DS Concrete Cubic Yards
GOLF EAST LEG										
1C016S058L000.0-000	67+85.00 (35.25 LT)*	II-C-A	3' - 6"	650.7	631.00	1.7 TSF	2' - 8 3/8"	25' - 6" ****	28' - 2 3/8"	10.1
GOLF SOUTHWEST LEG										
1C016S058R000.0-000	56+15.11 (42.52 RT)**	III-C-A	3' - 6"	646.30	612.07	1.5 TSF	2' - 2 3/4"	32' - 0"	34' - 2 3/4"	12.2

*** QU > 1.25 TSF ACCORDING TO WANG GEOTECHNICAL REPORT

* MEASURED ALONG GOLF RD (EAST LEG) EXISTING BASELINE

** MEASURED ALONG GOLF RD (SOUTHWEST LEG) EXISTING BASELINE

**** INSTALLATION OF DRILLED SHAFT MUST BE COORDINATED WITH INSTALLATION OF THE ADJACENT REROUTED SANITARY SEWER.

OSC-A-9 8-21-13

P:\1501-630_W07_Cumberland\Circle\CADD_Sheets\D162B16-sht-367-OSC-A-9-Drilled_Shaft_Foundation_Detail.dgn

HBM ENGINEERING GROUP, LLC

USER NAME = Ken.drabant	DESIGNED - JMG	REVISED - 12/01/2017	
	DRAWN - JMG	REVISED -	
PLOT SCALE = 2.0000 ' / in.	CHECKED - JJS	REVISED -	
PLOT DATE = 12/1/2017	DATE - 10/17/2017	REVISED -	

STATE OF ILLINOIS
DEPARTMENT OF TRANSPORTATION

CANTILEVER SIGN STRUCTURES – DRILLED SHAFT
ALUMINUM TRUSS & STEEL POST

SCALE: SHEET 8 OF 8 SHEETS STA. TO STA.

F.A.P. RTE.	SECTION	COUNTY	TOTAL SHEETS	SHEET NO.
339	583-R	COOK	186	150
		CONTRACT NO. 62B16		
		ILLINOIS FED. AID PROJECT		

Wang Engineering
wangeng@wangeng.com
1145 N Main Street
Lombard, IL 60148
Telephone: 630 953-9928
Fax: 630 953-9938

BORING LOG OSB-01

WEI Job No.: 213-02-03

Client: HBM Engineering Group, LLC
Project: Cumberland Circle
Location: Cook County, IL

GOLF RD (EAST LEG)
Datum: NAVD 88
Elevation: 650.27 ft
North: 1962489.35 ft
East: 1099423.47 ft
Station: 67+75.65
Offset: 29.21 LT

Elevation (ft)	SOIL AND ROCK DESCRIPTION	Depth (ft)	Sample No.	SPT Values (blw/6 in)	Qu (tsf)	Moisture Content (%)
649.7	7-inch thick, black SILTY CLAY LOAM --TOPSOIL--					
	Very stiff, brown and gray SILTY CLAY LOAM		1	3 3 5	2.21 B	24
647.3	Loose, brown SILTY LOAM; moist					
		5	2	2 2 2	NP	23
644.8	Stiff to hard, brown and gray SILTY CLAY to SILTY CLAY LOAM, sand seams, trace gravel		3	2 3 4	2.30 B	24
		10	4	2 3 5	2.05 B	21
			5	2 3 5	1.64 B	24
		15	6	3 4 7	2.05 B	23
			7	2 3 5	1.80 B	25
		20	8	3 4 7	2.25 P	17
		25	9	3 5 6	2.71 B	16
			10	4 6 8	2.62 B	17
		30	11	5 9 13	4.43 B	17
			12	8 12 16	6.48 B	13
		35	13	13 15 20	> 4.50 P	13
615.3	Boring terminated at 35.00 ft					
		40				

GENERAL NOTES

Begin Drilling: 10-19-2016 Complete Drilling: 10-19-2016
Drilling Contractor: Wang Testing Services Drill Rig: TMR CME-55 (85%)
Driller: N&N Logger: F. Bozga Checked by: Nesam. B
Drilling Method: 2.25" IDA HSA, boring backfilled upon completion

WATER LEVEL DATA

While Drilling: DRY
At Completion of Drilling: DRY
Time After Drilling: NA
Depth to Water: NA

The stratification lines represent the approximate boundary between soil types; the actual transition may be gradual.

Wang Engineering
wangeng@wangeng.com
1145 N Main Street
Lombard, IL 60148
Telephone: 630 953-9928
Fax: 630 953-9938

BORING LOG OSB-02

WEI Job No.: 213-02-03

Client: HBM Engineering Group, LLC
Project: Cumberland Circle
Location: Cook County, IL

GOLF RD (SOUTHWEST LEG)
Datum: NAVD 88
Elevation: 645.01 ft
North: 1961583.19 ft
East: 1098766.85 ft
Station: 55+52.85
Offset: 33.57 RT

Elevation (ft)	SOIL AND ROCK DESCRIPTION	Depth (ft)	Sample No.	SPT Values (blw/6 in)	Qu (tsf)	Moisture Content (%)
644.6	6-inch thick, black SILTY CLAY LOAM --TOPSOIL--					
	Very stiff, brown and gray SILTY CLAY, trace gravel --FILL--		1	7 3 4	2.00 P	20
642.0	Stiff to very stiff, gray SILTY CLAY to SILTY CLAY LOAM, trace gravel					
		5	2	2 5 8	2.21 B	14
		10	3	3 3 4	1.72 B	24
			4	2 4 5	2.05 B	26
	--sand lenses--		5	3 4 5	1.00 P	12
632.0	Medium dense, gray SILTY LOAM, little gravel; moist					
		15	6	4 6 7	NP	10
629.5	Stiff to very stiff, gray SILTY CLAY to SILTY CLAY LOAM, trace gravel					
		20	7	3 4 7	1.48 B	18
			8	2 4 7	2.30 B	17
624.6	Very dense, gray SILT; moist					
		25	9	17 26 32	NP	15
			10	20 35 45	NP	13
619.6	Hard, gray SILTY CLAY to SILTY CLAY LOAM, trace gravel					
		30	11	11 13 21	7.30 B	12
			12	10 12 18	6.97 B	17
		35	13	6 7 12	4.43 B	17
610.0	Boring terminated at 35.00 ft					
		40				

GENERAL NOTES

Begin Drilling: 10-19-2016 Complete Drilling: 10-19-2016
Drilling Contractor: Wang Testing Services Drill Rig: TMR CME-55 (85%)
Driller: N&N Logger: F. Bozga Checked by: Nesam. B
Drilling Method: 2.25" IDA HSA, boring backfilled upon completion

WATER LEVEL DATA

While Drilling: DRY
At Completion of Drilling: DRY
Time After Drilling: NA
Depth to Water: NA

The stratification lines represent the approximate boundary between soil types; the actual transition may be gradual.

WANGENGINC 213020 3 GPJ WANGENG GDT 10/25/16
P:\1581-638 W07 Cumberland-Circle\CADD_Sheets\D162B16-sht-368-Str7-borings.dgn

SIGN DETAIL

1:40

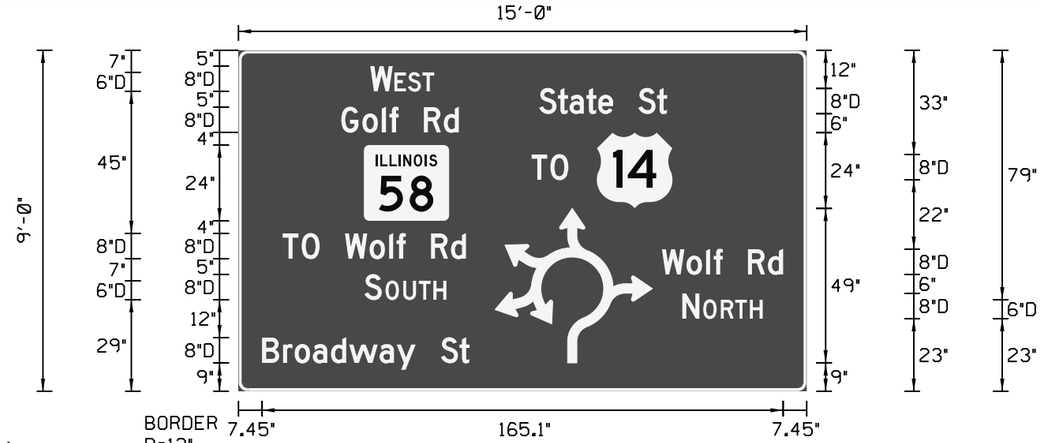

Panel Style: guide_con_circular.ss1
M.U.T.C.D.: 2009 Edition

Panel Style: guide_con_circular.ss1
Dimensions are in inches.tenths

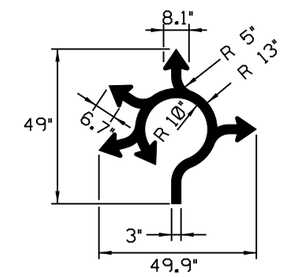

Letter locations are panel edge to lower left corner

SIGN NUMBER	
WIDTH x HGHT.	15'-0" x 9'-0"
BORDER WIDTH	2"
CORNER RADIUS	12"
MOUNTING	Overhead
BACKGROUND	TYPE: Reflective
	COLOR: Green
LEGEND/BORDER	TYPE: Reflective
	COLOR: White/White

SYMBOL	ROT	X	Y	WID	HT
M1_4	0	113.5	58	24	24
M1-1100 A-2-32-15D	0	39.7	54	27	24
Associative Region	0	81.2	9	49.9	49

LETTER POSITIONS (X)

																																				LENGTH	SERIES/SIZE
W	E	S	T																																		D 2000
41.7	49.4	53.7	58.2																																	20.2	8.6
S	t	a	t	e		S	t																														D 2000
95.3	101.2	104.9	110.2	114	118.7	126.7	132.6																													40.6	8/6
G	o	l	f		R	d																															D 2000
32.5	39.3	45.4	47.8	50.7	58.7	65																														37.3	8/6
T	O																																				D 2000
92.8	98.8																																			11.7	8
T	O																																				D 2000
14	20																																			11.7	8
W	o	l	f		R	d																															D 2000
33.7	41.5	47.7	50.1	53	61	67.3																														38.4	8/6
W	o	l	f		R	d																															D 2000
134.1	142	148.1	150.5	153.4	161.4	167.7																														38.4	8/6
S	O	U	T	H																																	D 2000
39.9	46.6	52.2	57.1	61.8																																25.9	8.6
N	O	R	T	H																																	D 2000
140.6	147.2	152.8	157.4	162																																25.5	8.6
B	r	o	a	d	w	a	y		S	t																											D 2000
7.5	14.1	17.8	23.5	29.3	35.1	44.7	50.1	56.1	64.1	70																										65.8	8/6

P:\501-630 W07 CumberlandCircle\CADD_Sheets\D162B16-sht-304-PMK5-sign-OH.dgn
12/1/2017 3:45:28 PM

GRAEF 8501 W. Higgins Road, Suite 280 Chicago, Illinois 60631 (773) 399-0112

USER NAME = Kendrabant	DESIGNED - MJ	REVISED - 12/01/2017
	DRAWN - MJ	REVISED -
PLOT SCALE = 4.0000 ft / in.	CHECKED - JO	REVISED -
PLOT DATE = 12/1/2017	DATE - 10/17/2017	REVISED -

STATE OF ILLINOIS
DEPARTMENT OF TRANSPORTATION

OVERHEAD SIGN PANEL AND MISC. SIGNS

SCALE: | SHEET 1 OF 5 SHEETS | STA. TO STA.

F.A.P. RTE.	SECTION	COUNTY	TOTAL SHEETS	SHEET NO.
339	583-R	COOK	186	152

CONTRACT NO. 62B16

ILLINOIS FED. AID PROJECT

SIGN DETAIL

1:40

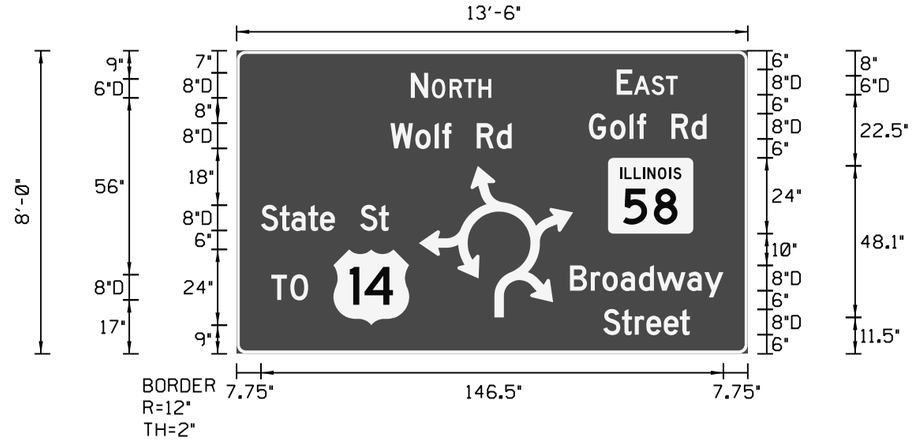

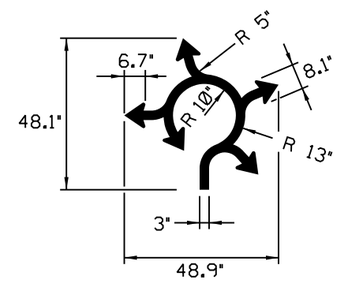

SIGN NUMBER			
WIDTH x HGHT.	13'-6" x 8'-0"		
BORDER WIDTH	2"		
CORNER RADIUS	12"		
MOUNTING	Overhead		
BACKGROUND	TYPE:	Reflective	
	COLOR:	Green	
LEGEND/BORDER	TYPE:	Reflective	
	COLOR:	White/White	

SYMBOL	ROT	X	Y	WID	HT
M1-1100 A-2-32-15D	0	117.7	38	27	24
Associative Region	0	57.8	11.5	48.9	48.1
M1_4	0	30.7	9	24	24

Panel Style: guide_con_circular.ss1
Dimensions are in inches.tenths

Panel Style: guide_con_circular.ss1
M.U.T.C.D.: 2009 Edition

Letter locations are panel edge to lower left corner

LETTER POSITIONS (X)																																				LENGTH	SERIES/SIZE
E	A	S	T																																		D 2000
120.5	125.9	131.5	136.1																																	19.3	8.6
N	O	R	T	H																																	D 2000
55.3	61.9	67.5	72	76.7																																25.5	8.6
G	o	l	f		R	d																															D 2000
111.6	118.4	124.5	126.9	129.8	137.8	144.1																														37.3	8/6
W	o	l	f		R	d																															D 2000
48.8	56.6	62.8	65.2	68.1	76.1	82.4																														38.4	8/6
S	t	a	t	e		S	t																														D 2000
7.7	13.7	17.3	22.7	26.5	31.2	39.2	45.1																													40.6	8/6
B	r	o	a	d	w	a	y																														D 2000
105.6	112.3	115.9	121.7	127.5	133.2	142.8	148.3																													48.6	8/6
T	O																																				D 2000
11	17																																			11.7	8
S	t	r	e	e	t																																D 2000
116.2	122.1	126.2	129.9	135.4	140.5																															27.5	8/6

P:\501-630 W07 CumberlandCircle\CADD_Sheets\D162B16-sht-305-PMK6-sign-OH.dgn
12/1/2017 3:45:29 PM

GRAEF 8501 W. Higgins Road; Suite 280 Chicago, Illinois 60631 (773) 399-0112

USER NAME = Kendrabent	DESIGNED - MJ	REVISED - 12/01/2017
	DRAWN - MJ	REVISED -
PLOT SCALE = 4.0000 ft / in.	CHECKED - JO	REVISED -
PLOT DATE = 12/1/2017	DATE - 10/17/2017	REVISED -

STATE OF ILLINOIS
DEPARTMENT OF TRANSPORTATION

OVERHEAD SIGN PANEL AND MISC. SIGNS

SCALE: | SHEET 2 OF 5 SHEETS | STA. TO STA.

F.A.P. RTE.	SECTION	COUNTY	TOTAL SHEETS	SHEET NO.
339	583-R	COOK	186	153

CONTRACT NO. 62B16

ILLINOIS FED. AID PROJECT

SIGN DETAIL

1:40

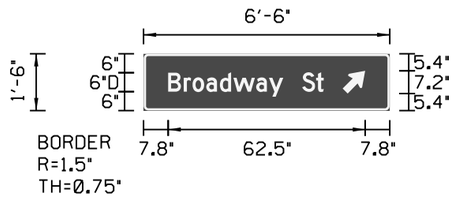

Panel Style: guide_con_destination.ssi
M.U.T.C.D.: 2009 Edition

SIGN NUMBER		
WIDTH x HGHT.	6'-6" x 1'-6"	
BORDER WIDTH	0.75"	
CORNER RADIUS	1.5"	
MOUNTING	Overhead	
BACKGROUND	TYPE:	Reflective
	COLOR:	Green
LEGEND/BORDER	TYPE:	Reflective
	COLOR:	White/White

SYMBOL	ROT	X	Y	WID	HT
AR_Type D	314.8	63.1	5.4	6	9

Panel Style: guide_con_destination.ssi
Dimensions are in inches.tenths

Letter locations are panel edge to lower left corner

LETTER POSITIONS (X)

B	r	o	a	d	w	a	y		S	t	LENGTH	SERIES/SIZE
7.8	12.8	15.5	19.8	24.2	28.5	35.7	39.8	44.3	50.3	54.7	49.3	D 2000 6/4.5

P:\150I-630 W07 CumberlandCircle\CADD_Sheets\D162B16-sht-306-PMK7-sign-grnd.dgn
10/20/2017 9:59:39 AM

GRAEF 8501 W. Higgins Road; Suite 280 Chicago, Illinois 60631 (773) 399-0112

USER NAME = Kendrabant	DESIGNED - MJ	REVISED -	
	DRAWN - MJ	REVISED -	
PLOT SCALE = 4.0000 ft / in.	CHECKED - JO	REVISED -	
PLOT DATE = 10/20/2017	DATE - 10/17/2017	REVISED -	

STATE OF ILLINOIS
DEPARTMENT OF TRANSPORTATION

OVERHEAD SIGN PANEL AND MISC. SIGNS

SCALE: | SHEET 3 OF 5 SHEETS | STA. TO STA.

F.A.P. RTE.	SECTION	COUNTY	TOTAL SHEETS	SHEET NO.
339	583-R	COOK	186	154

CONTRACT NO. 62B16

ILLINOIS FED. AID PROJECT

SIGN DETAIL
1:40

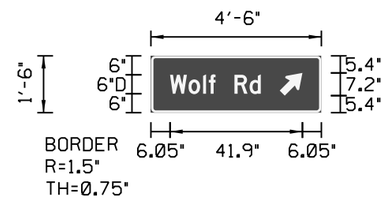

Panel Style: guide_con_destination.ssi
M.U.T.C.D.: 2009 Edition

SIGN NUMBER	
WIDTH x HGHT.	4'-6" x 1'-6"
BORDER WIDTH	0.75"
CORNER RADIUS	1.5"
MOUNTING	Overhead
BACKGROUND	TYPE: Reflective
	COLOR: Green
LEGEND/BORDER	TYPE: Reflective
	COLOR: White/White

SYMBOL	ROT	X	Y	WID	HT
AR_Type D	314.8	40.8	5.4	6	9

Panel Style: guide_con_destination.ssi
Dimensions are in inches.tenths

Letter locations are panel edge to lower left corner

LETTER POSITIONS (X)																																					LENGTH	SERIES/SIZE
W	o	l	f		R	d																																D 2000
6	11.9	16.5	18.3	20.5	26.5	31.2																															28.8	6/4.5

SIGN DETAIL
1:40

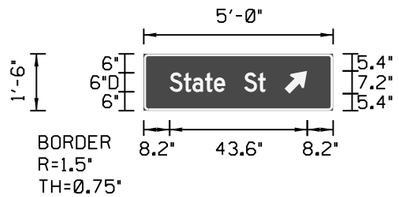

Panel Style: guide_con_destination.ssi
M.U.T.C.D.: 2009 Edition

SIGN NUMBER	
WIDTH x HGHT.	5'-0" x 1'-6"
BORDER WIDTH	0.75"
CORNER RADIUS	1.5"
MOUNTING	Overhead
BACKGROUND	TYPE: Reflective
	COLOR: Green
LEGEND/BORDER	TYPE: Reflective
	COLOR: White/White

SYMBOL	ROT	X	Y	WID	HT
AR_Type D	314.8	44.6	5.4	6	9

Panel Style: guide_con_destination.ssi
Dimensions are in inches.tenths

Letter locations are panel edge to lower left corner

LETTER POSITIONS (X)																																						LENGTH	SERIES-SIZE
S	t	a	t	e		S	t																																D 2000
8.2	12.7	15.4	19.4	22.3	25.8	31.8	36.2																															30.4	6/4.5

P:\501-630 W07 CumberlandCircle\CADD_Sheets\D162B16-sht-308-PMK9-sign-grnd.dgn
10/20/2017 9:59:40 AM

GRAEF 8501 W. Higgins Road; Suite 280 Chicago, Illinois 60631 (773) 399-0112

USER NAME = Kendrabant	DESIGNED - MJ	REVISED -	
	DRAWN - MJ	REVISED -	
PLOT SCALE = 4.0000 ft / in.	CHECKED - JO	REVISED -	
PLOT DATE = 10/20/2017	DATE - 10/17/2017	REVISED -	

STATE OF ILLINOIS
DEPARTMENT OF TRANSPORTATION

OVERHEAD SIGN PANEL AND MISC. SIGNS

SCALE: | SHEET 5 OF 5 SHEETS | STA. TO STA.

F.A.P. RTE.	SECTION	COUNTY	TOTAL SHEETS	SHEET NO.
339	583-R	COOK	186	156

CONTRACT NO. 62B16

ILLINOIS FED. AID PROJECT

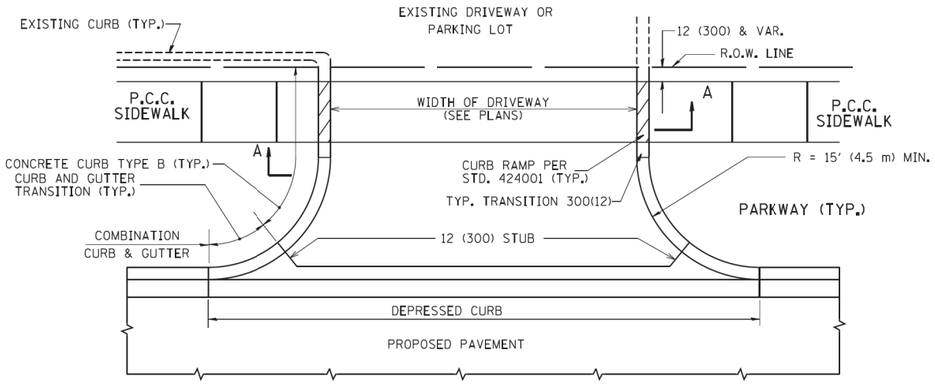

WITH CONCRETE CURB, TYPE B

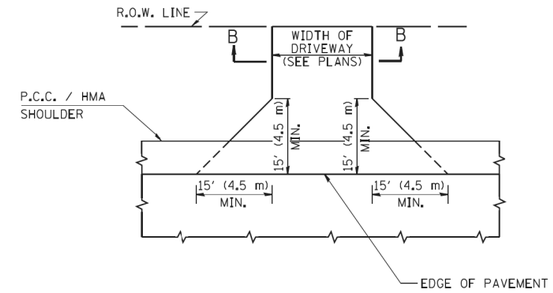

ADJACENT TO P.C.C. / HMA SHOULDER

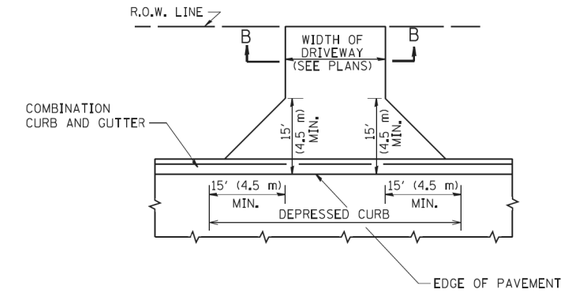

ADJACENT TO CURB AND GUTTER

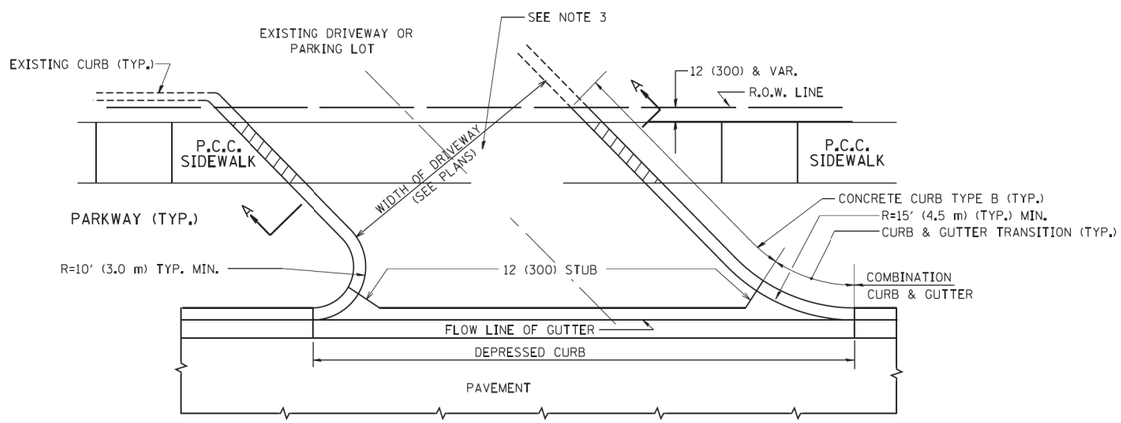

WITH CONCRETE CURB, TYPE B

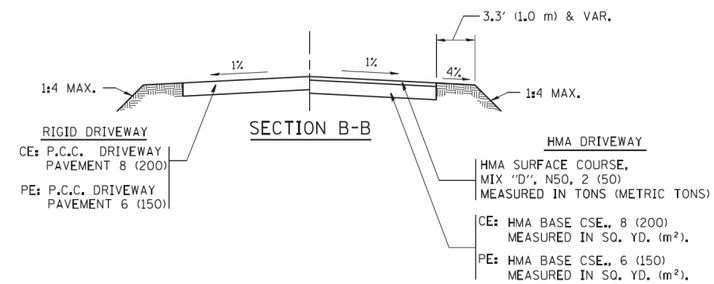

SECTION B-B

RURAL FIELD ENTRANCE (FE)

HMA SURFACE COURSE, MIX "D", N50, 2 (50) MEASURED IN TONS (METRIC TONS)

AGGREGATE BASE CSE., TYPE B, 8 (200) MEASURED IN SQ. YD. (m^2).

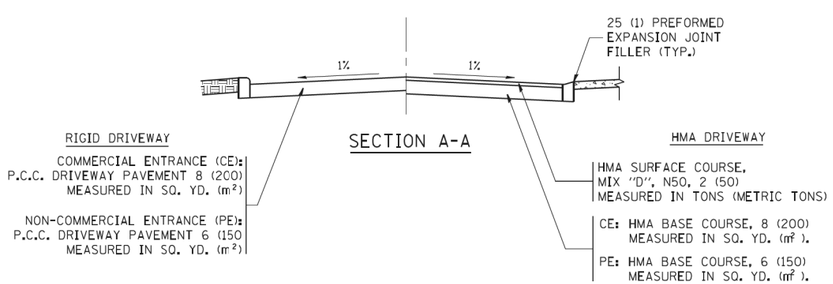

SECTION A-A

GENERAL NOTES:

DRIVEWAY SLOPES, LOCATIONS, & GEOMETRIC LAYOUT SHALL BE IN ACCORDANCE WITH THE LATEST EDITION OF THE "HANDBOOK FOR POLICY ON PERMITS FOR ACCESS DRIVEWAYS TO STATE HIGHWAYS". FOR FURTHER LAYOUT REQUIREMENTS, REFER TO ILLUSTRATIONS IN THE PERMIT HANDBOOK. DRIVEWAYS SHALL BE REPLACED IN KIND, UNLESS OTHERWISE NOTED ON THE PLANS.

COMMERCIAL DRIVEWAYS SHALL BE CONSTRUCTED WITH CONCRETE CURB, TYPE B RETURNS EXCEPT WHEN THE SIDEWALK EDGE IS 4 FEET (1.2 METERS) OR LESS FROM THE BACK OF CURB, CONSTRUCT A FLARE DRIVEWAY WITHOUT CURB.

THE RESIDENT ENGINEER SHALL CONTACT THE TRAFFIC PERMIT OFFICE AT 847/ 705-4131 FOR ANY QUESTIONS ON DRIVEWAYS SHOWN IN THE PLANS; SPECIFICALLY IN REFERENCE TO ADDITIONAL AND/OR RELOCATION/REMOVAL OF A DRIVEWAY.

COMBINATION CONCRETE CURB & GUTTER SHALL BE MEASURED STRAIGHT ACROSS THE DRIVEWAY. NO ADDITIONAL COMPENSATION WILL BE ALLOWED FOR THE CURB & GUTTER TRANSITION.

1 (25) PREFORMED EXPANSION JOINT FILLER WILL NOT BE PAID SEPARATELY, BUT SHALL BE CONSIDERED INCLUDED IN THE COST OF THE P.C.C. DRIVEWAY PAVEMENT OR P.C.C. SIDEWALK.

WHEN THE P.C.C. SIDEWALK EXTENDS THROUGH THE DRIVEWAY, THE THICKNESS OF THE SIDEWALK IN THE DRIVEWAY AREA SHALL BE THE SAME AS THE DRIVEWAY THICKNESS. SIDEWALK WILL BE PAID FOR AS P.C.C. SIDEWALK OF THE THICKNESS SPECIFIED. SIDEWALK CROSS SLOPE THRU DRIVEWAY AREA TO BE A MAXIMUM OF 1:50.

FILE NAME = c:\pw_work\pwidot\leysa\d0108315\bd01.dgn	USER NAME = leysa	DESIGNED - R. SHAH	REVISED - P. LaFLUER 04-15-03	STATE OF ILLINOIS DEPARTMENT OF TRANSPORTATION	DRIVEWAY DETAILS – DISTANCE BETWEEN R.O.W. AND FACE OF CURB & EDGE OF SHOULDER >= 15' (4.5 m)	F.A.P. RTE.	SECTION	COUNTY	TOTAL SHEETS	SHEET NO.
		DRAWN -	REVISED - R. BORO 01-01-07			339	583-R	COOK	186	157
	PLOT SCALE = 50.0000 ' / in.	CHECKED -	REVISED - R. BORO 06-11-08			BD0156-07 (BD-01)		CONTRACT NO. 62B16		
	PLOT DATE = 9/6/2011	DATE - 11-04-95	REVISED - R. BORO 09-06-11		SCALE: NONE / SHEET NO. 1 OF 1 SHEETS / STA. TO STA.	FED. ROAD DIST. NO. 1	ILLINOIS	FED. AID PROJECT		

bd03.dgn 9/6/2011 11:50:34 AM User=leysa

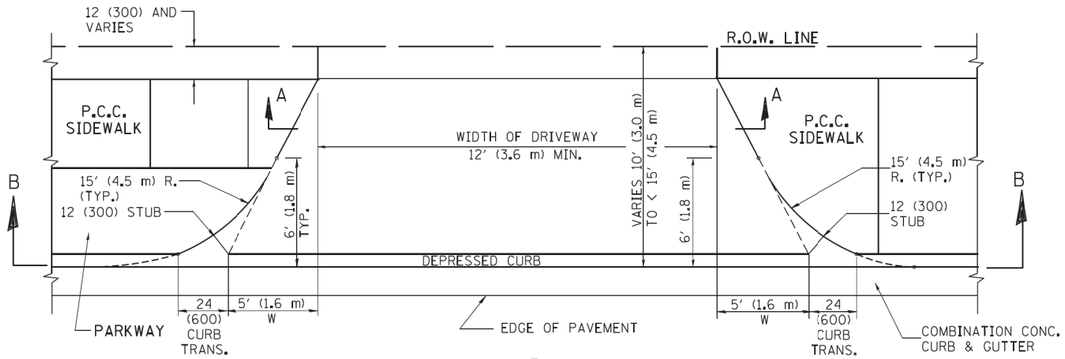

PLAN

10' (3.0 m) TO < 15' (4.5 m)

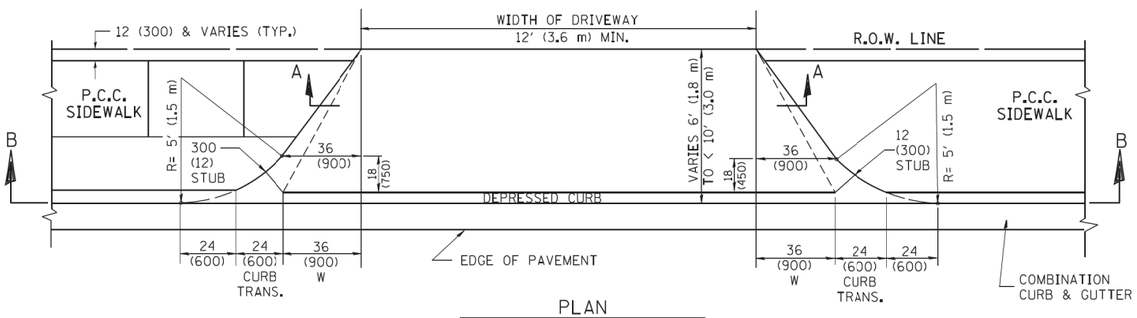

PLAN

6' (1.8 m) TO < 10' (3.0 m)

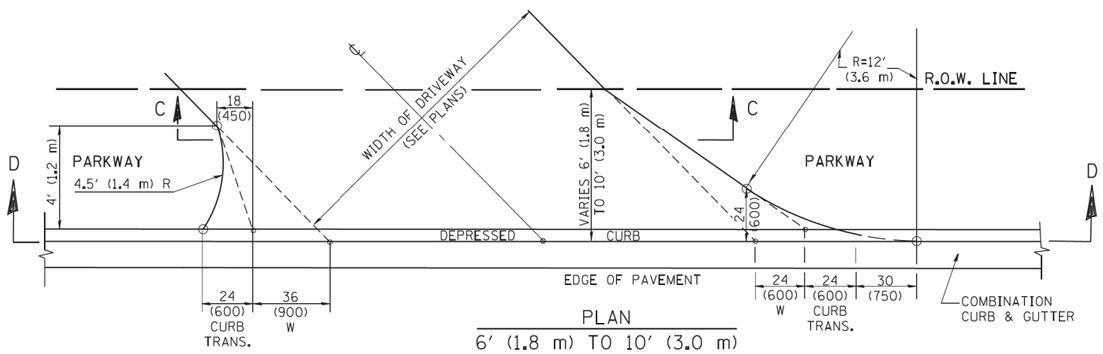

PLAN

6' (1.8 m) TO 10' (3.0 m)

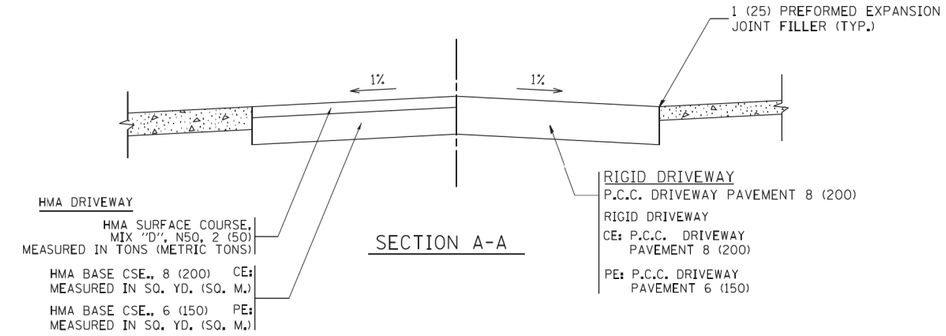

SECTION A-A

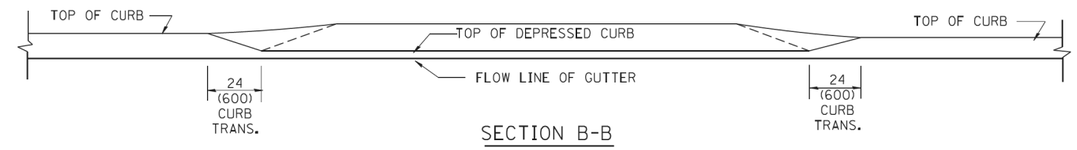

SECTION B-B

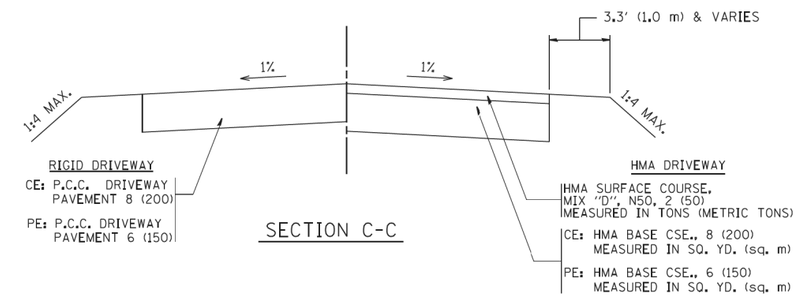

SECTION C-C

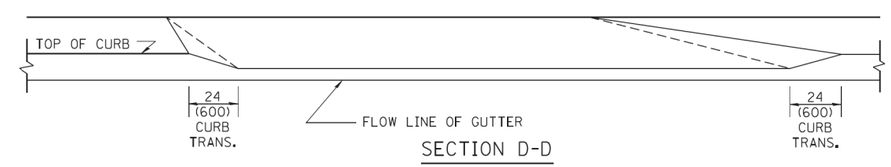

SECTION D-D

GENERAL NOTES

DRIVEWAY SLOPES, LOCATIONS, & GEOMETRIC LAYOUT SHALL BE IN ACCORDANCE WITH THE LATEST EDITION OF THE "HANDBOOK FOR POLICY ON PERMITS FOR ACCESS DRIVEWAYS TO STATE HIGHWAYS". FOR FURTHER LAYOUT REQUIREMENTS, REFER TO ILLUSTRATION 10 IN THE PERMIT HANDBOOK. WHERE SIDEWALKS EXIST, DRIVEWAYS SHALL BE REPLACED WITH RIGID PAVEMENT. WHERE NO SIDEWALKS EXIST, DRIVEWAYS SHALL BE REPLACED IN KIND. SIDEWALK CROSS SLOPE THRU DRIVEWAY AREA TO BE A MAXIMUM OF 1:50.

WHEN THE DISTANCE BETWEEN R.O.W. AND THE BACK OF CURB IS EQUAL TO OR LESS THAN 8' (2.4 m), THE P.C.C. SIDEWALK SHALL EXTEND TO THE BACK OF CURB.

THE RESIDENT ENGINEER SHALL CONTACT THE TRAFFIC PERMIT OFFICE AT 847/ 705-4131 FOR ANY QUESTIONS ON DRIVEWAYS SHOWN IN THE PLANS; SPECIFICALLY IN REFERENCE TO ADDITIONAL AND/OR RELOCATION/REMOVAL OF A DRIVEWAY.

COMBINATION CONCRETE CURB & GUTTER SHALL BE MEASURED STRAIGHT ACROSS THE DRIVEWAY. NO ADDITIONAL COMPENSATION WILL BE ALLOWED FOR THE CURB & GUTTER TRANSITION.

THE 1 (25) PREFORMED EXPANSION JOINT FILLER WILL NOT BE PAID SEPARATELY, BUT SHALL BE CONSIDERED INCLUDED IN THE COST OF THE P.C.C. DRIVEWAY PAVEMENT OR P.C.C. SIDEWALK.

"W" VARIES FROM 36 (900) TO 5' (1.5 m) PROPORTIONAL TO THE LENGTH (L), FROM 6' (1.8 m) TO 10' (3 m).

ALL DIMENSIONS ARE IN INCHES (MILLIMETERS) UNLESS OTHERWISE NOTED.

FILE NAME = c:\pw_work\pwidot\leysa\d0108315\bd02.dgn	USER NAME = leysa	DESIGNED - R. SHAH	REVISED - M. GOMEZ 04-06-01	STATE OF ILLINOIS DEPARTMENT OF TRANSPORTATION	DRIVEWAY DETAILS DISTANCE BETWEEN ROW AND FACE OF CURB < 15' (4.5 m)			F.A.P. RTE.	SECTION	COUNTY	TOTAL SHEETS / SHEET NO.
		DRAWN -	REVISED - P. LaFLEUR 04-15-03					339	583-R	COOK	186 / 158
	PLOT SCALE = 50.0000 ' / in.	CHECKED -	REVISED - R. BORO 01-01-07					BD400-02 (BD-02)		CONTRACT NO. 62B16	
	PLOT DATE = 10/28/2011	DATE - 11-06-95	REVISED - R. BORO 09-06-11		SCALE: NONE	SHEET NO. 1 OF 1 SHEETS	STA. TO STA.	FED. ROAD DIST. NO. 1	ILLINOIS	FED. AID PROJECT	

bd02.dgn 10/28/2011 1:00:32 PM User=leysa

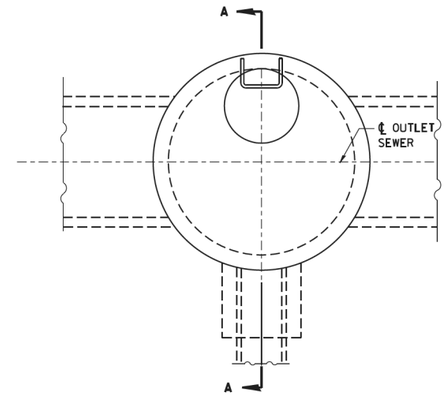

PLAN
FOR LOCATION SEE DRAINAGE PLANS

ENCASEMENT DETAILS				
DROP M.H. LOCATION STA., OFFSET				
INV. "A"				
INLET PIPE				
INV. "B"				
INV. "C"				
A				
B				
"V" BAR LENGTH				
NO. OF "U" BARS				
REINF. BARS				
CLASS "SI" CONC. CUBIC METER (CU. YD.)				

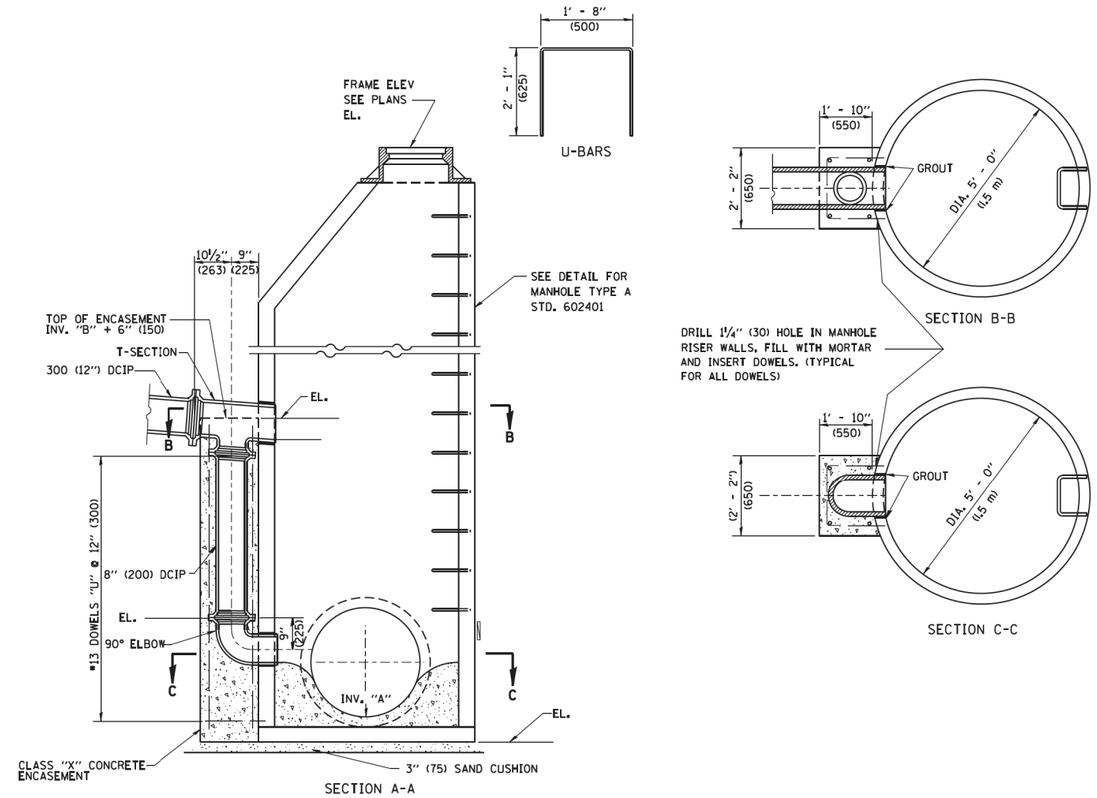

TYPE A1-1 MANHOLE WITH 1 DROP AND DEPTH UP TO 10' (3 m)
TYPE A1-2 " " 1 " " " FROM 10' TO 15' (3 m TO 1.5 m)
TYPE A1-3 " " 1 " " " FROM 15' TO 20' (1.5 m TO 6 m)
TYPE A1-4 " " 1 " " " OVER 20' (6 m)

TYPE A2-1 MANHOLE WITH 2 DROPS AND DEPTH UP TO 10' (3 m)
TYPE A2-2 " " 2 " " " FROM 10' TO 15' (3 m TO 1.5 m)
TYPE A2-3 " " 2 " " " FROM 15' TO 20' (1.5 m to 6 m)
TYPE A2-4 " " 2 " " " OVER 20' (6 m)

ALL DIMENSIONS ARE IN INCHES (MILLIMETERS)
UNLESS OTHERWISE SHOWN

FILE NAME = Ws\diststd\22x34\bd16.dgn	USER NAME = gaglianobt	DESIGNED -	REVISED -
		DRAWN -	REVISED -
	PLOT SCALE = 50.000 ' / IN.	CHECKED -	REVISED -
	PLOT DATE = 1/4/2008	DATE - 10-18-02	REVISED -

STATE OF ILLINOIS
DEPARTMENT OF TRANSPORTATION

DROP MANHOLE DETAILS

SCALE: NONE | SHEET NO. 1 OF 1 SHEETS | STA. | TO STA.

F.A.P. RTE.	SECTION	COUNTY	TOTAL SHEETS	SHEET NO.
339	583-R	COOK	186	159
BD600-05	(BD-16)	CONTRACT NO. 62B16		
FED. ROAD DIST. NO. 1	ILLINOIS	FED. AID PROJECT		

TYPICAL APPLICATION

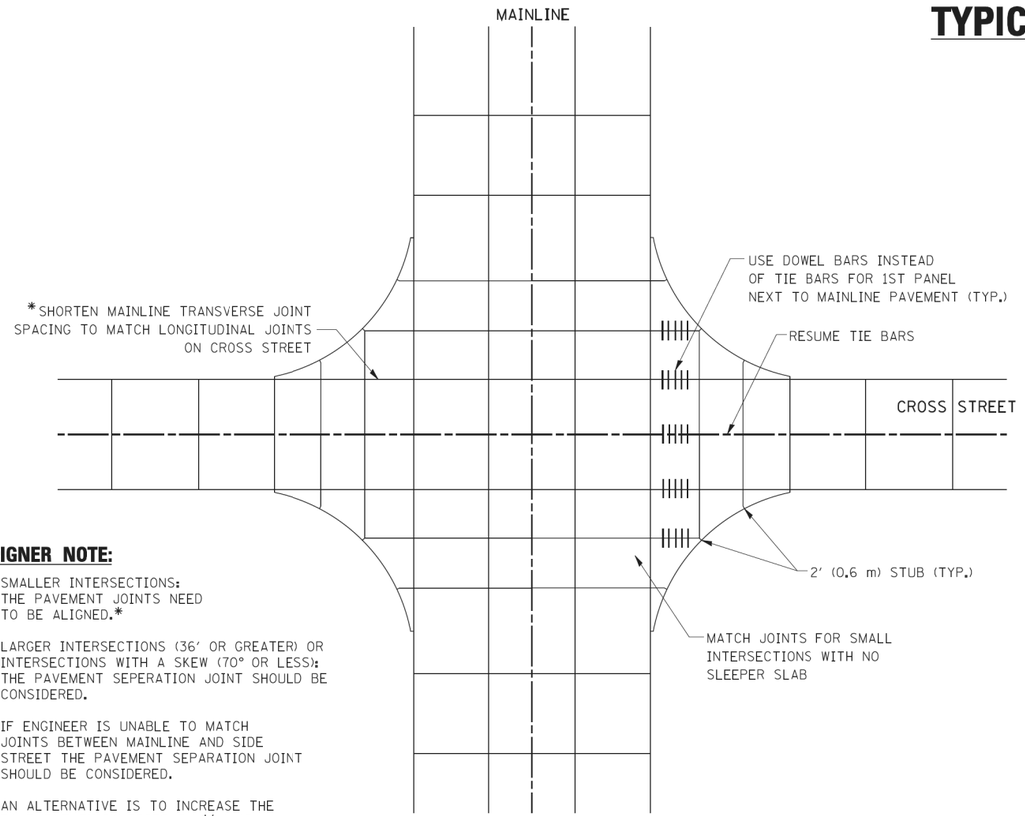

PLAN

DESIGNER NOTE:

1. SMALLER INTERSECTIONS: THE PAVEMENT JOINTS NEED TO BE ALIGNED.*
2. LARGER INTERSECTIONS (36' OR GREATER) OR INTERSECTIONS WITH A SKEW (70° OR LESS): THE PAVEMENT SEPERATION JOINT SHOULD BE CONSIDERED.
3. IF ENGINEER IS UNABLE TO MATCH JOINTS BETWEEN MAINLINE AND SIDE STREET THE PAVEMENT SEPARATION JOINT SHOULD BE CONSIDERED.
4. AN ALTERNATIVE IS TO INCREASE THE PAVEMENT THICKNESSES BY ½" (13 mm) FOR THE LENGTH OF THE AFFECTED PANELS AT THE INTERSECTION.
5. FOR LARGE INTERSECTIONS (6 LANES OR MORE) WHERE JOINTS CAN BE MATCHED, USE #8 (25) DOWEL BARS INSTEAD OF #8 (25) TIE BARS AT EDGE OF MAINLINE PAVEMENT WHEN NO PAVEMENT SEPARATION JOINTS USED.

THE USE OF CROSS STREET PAVEMENT SEPARATION JOINTS FOR SKEWED OR LARGE INTERSECTIONS WHERE JOINTS MAY NOT MATCH

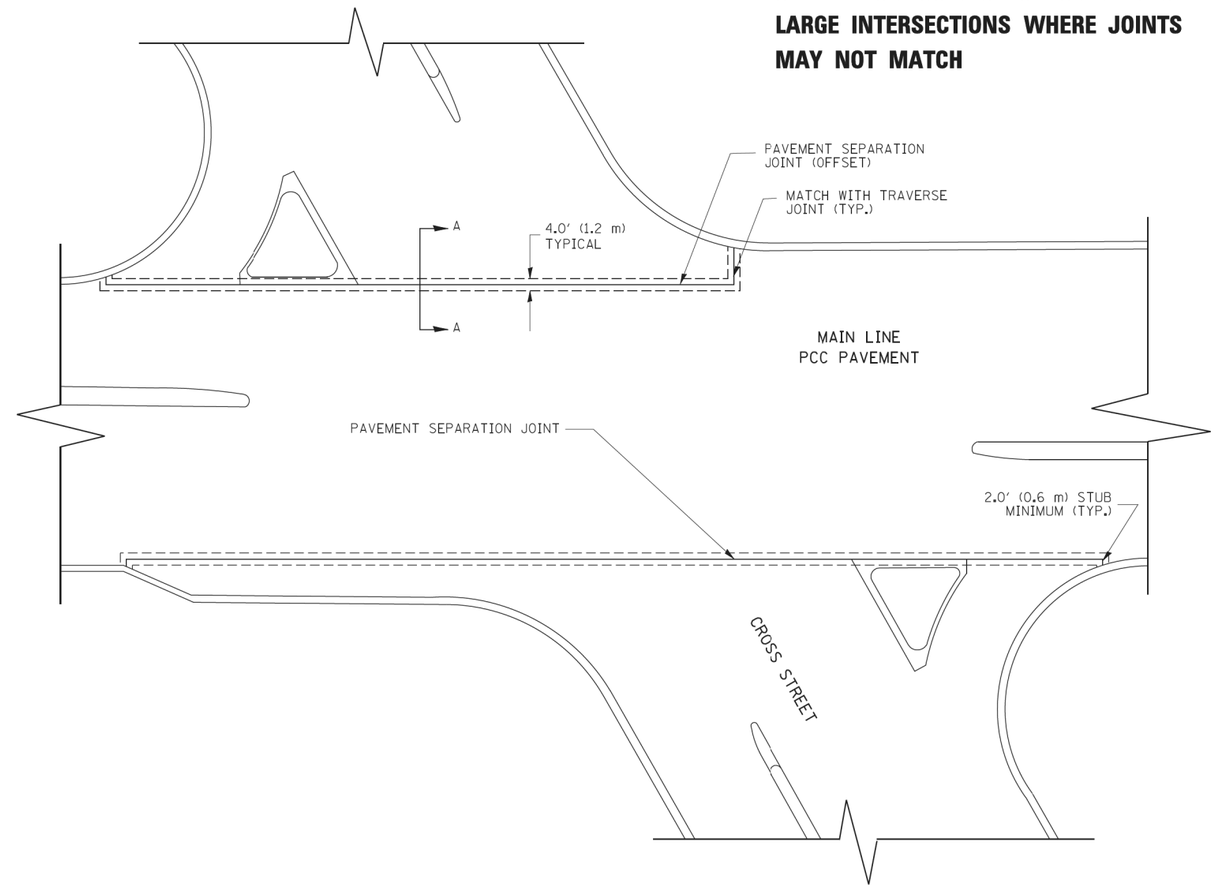

NOTE:

1. JOINT FILLER SHALL CONSIST OF A SHEET OF ½" (13 mm) BITUMINOUS PREFORMED FIBER JOINT FILLER CONFORMING TC ARTICLE 1051.03 OF THE STANDARD SPECIFICATIONS.
2. THE JOINT SHALL BE SEALED WITH A HOT POUR JOINT SEALER CONFORMING TO ARTICLE 1050.02 OF THE STANDARD SPECIFICATIONS.
3. A SINGLE LAYER OF FELT ROOFING PAPER SHALL SERVE AS A BOND BREAKER.
4. JOINT SHALL CONTINUE THROUGH COMBINATION CURB & GUTTER OR PCC SHOULDER.
5. PAVEMENT SEPARATION JOINT IS TO BE PAID FOR AS "SLEEPER SLAB" AND IS TO BE MEASURED IN PLACE BY THE LINEAL FOOT.
6. BOND BREAKER AND ½" (13 mm) JOINT AND FILLER SHALL BE INCIDENTAL TO THE PAY ITEM "SLEEPER SLAB".

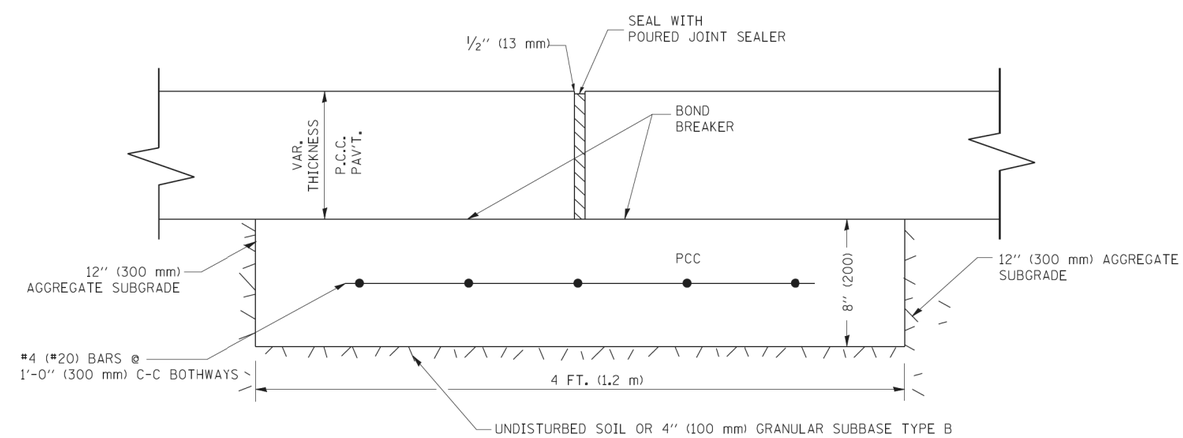

PROPOSED SECTION A–A

FILE NAME = bd52.dgn	USER NAME = lausa	DESIGNED -	REVISED - CADD 06-18-10	STATE OF ILLINOIS DEPARTMENT OF TRANSPORTATION	DETAIL OF PAVEMENT SEPARATION JOINT FOR JOINTED PCC PAVEMENTS AT INTERSECTIONS	F.A.P RTE. 339	SECTION 583-R	COUNTY COOK	TOTAL SHEETS 186	SHEET NO. 160
		DRAWN -	REVISED -							
	PLOT SCALE = 49.9999 '/ IN.	CHECKED -	REVISED -			BD52		CONTRACT NO. 62B16		
	PLOT DATE = 2/25/2011	DATE -	REVISED -		SCALE: NONE SHEET NO. 1 OF 1 SHEETS STA. TO STA.			ILLINOIS FED. AID PROJECT		

LANE REDUCTION WITH A CONTINUOUS PAVEMENT FOR 1ST STAGE WITH DEAD END JOINT OR SLEEPER SLAB

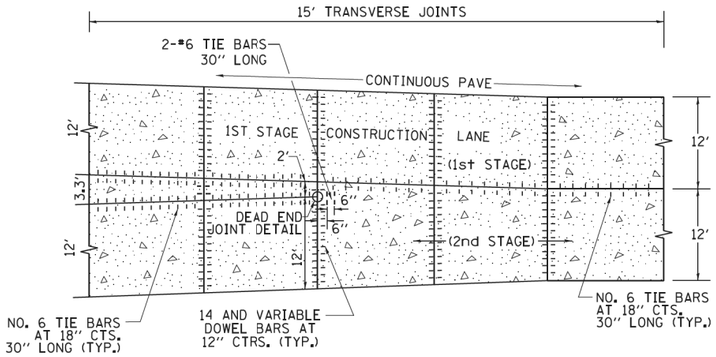

PLAN

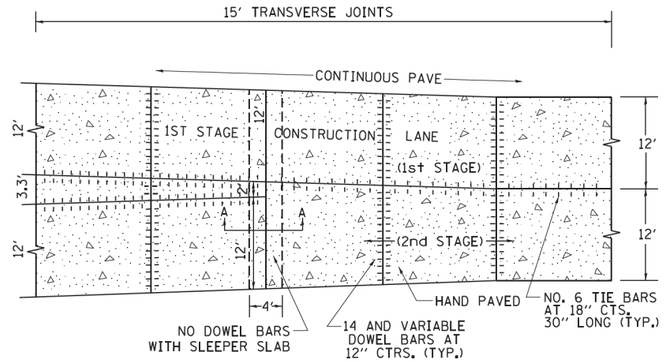

PLAN

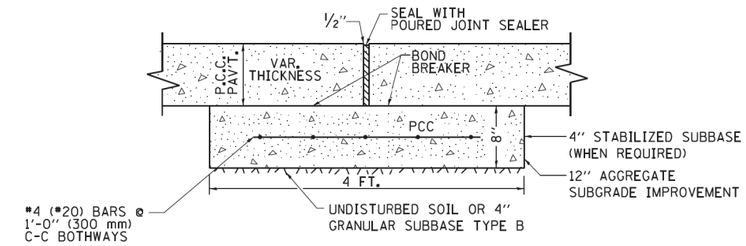

PROPOSED SECTION A–A OF SLEEPER SLAB

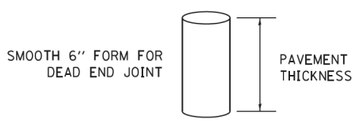

DEAD END JOINT DETAIL SIDE VIEW

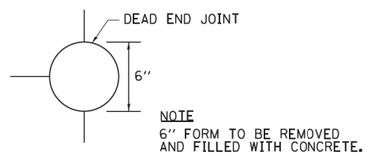

DEAD END JOINT DETAIL TOP VIEW

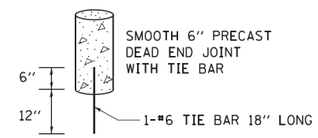

DEAD END JOINT PRECAST DETAIL

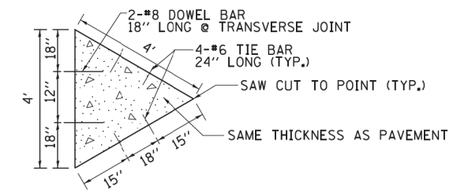

SAW–CUT MERGE DETAIL

TRANSITION DETAILS FOR CENTERLINE SAW CUT FOR DEAD END JOINT OR SLEEPER SLAB FOR VARIABLE JOINTED PCC PAVEMENT FOR LANES OVER 14'

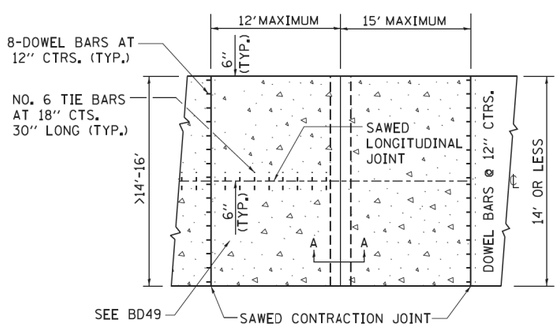

PLAN USING SLEEPER SLAB

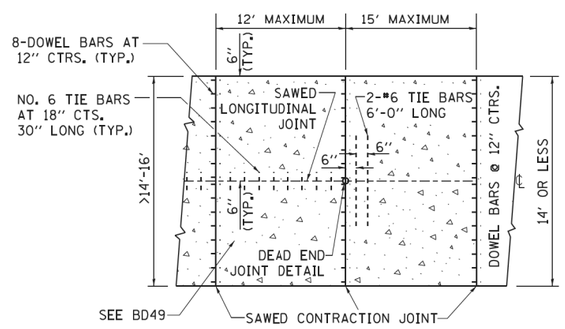

PLAN USING DEAD END JOINT

INTERIOR LANE REDUCTION FOR THREE LANE SECTION IN PCC PAVEMENT

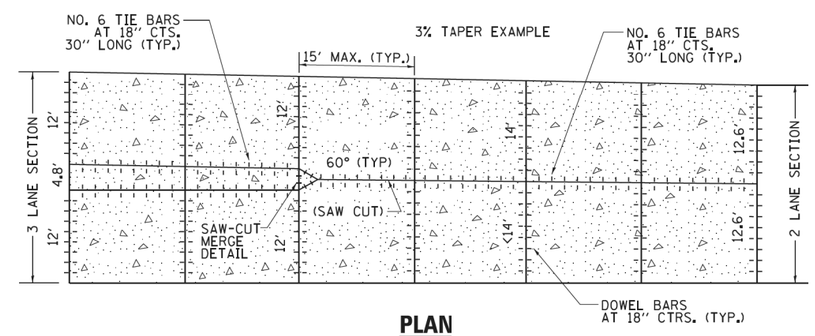

PLAN

NOTES:

1. SAW-CUT MERGE DETAIL: THE 4' TRIANGLE SECTION COULD BE PRECAST OR CAST INPLACE AND PROPERLY PLACED WITH TIE BARS AND PROPERLY ALIGNED DOWEL BARS.
2. TRANSVERSE JOINT SPACING MAY DECREASE DEPENDING ON PAVEMENT THICKNESS BELOW 9.5". USE FORMULA JOINT SPACING IN (FT) = 2 X PAVEMENT THICKNESS IN (IN)-4.
3. USE SAW-CUT MERGE DETAIL IN SITUATIONS WHERE THERE IS NO STAGING.
4. PRECAST DEAD END JOINT SET IN PLACE WITH DRILLED HOLE INTO SUBBASE/SUBGRADE FOR #6 TIE BAR.
5. DEAD END JOINTS WILL NOT BE PAID SEPARATELY, BUT SHALL BE INCLUDED IN THE CONTRACT UNIT PRICE FOR PCC PAVEMENT.
6. SLEEPER SLAB WILL BE PAID FOR AT THE CONTRACT UNIT PRICE PER FOOT FOR SLEEPER SLAB.

FILE NAME = pw:\\IL084EBIDINTEG.illinois.gov:PWIDOT\Documents\IDOT Offices\District 1\Projects\Dist_Stds\KM\CADData\CAMsheets\bd53.dgn	USER NAME = drivekosgn	DESIGNED - TGM, EAJ	REVISED - CADD 05-02-12	STATE OF ILLINOIS DEPARTMENT OF TRANSPORTATION	DETAIL OF VARIOUS TYPES OF LANE REDUCTION FOR PCC PAVEMENT	F.A.P RTE.	SECTION	COUNTY	TOTAL SHEETS	SHEET NO.
		DRAWN - KM	REVISED - CADD 11-02-15			339	583-R	COOK	186	161
	PLOT SCALE = 50.0000 ' / in.	CHECKED - JD	REVISED -			BD53		CONTRACT NO. 62B16		
Default	PLOT DATE = 11/2/2015	DATE - 03/07/12	REVISED -		SCALE: NONE SHEET 1 OF 1 SHEETS STA. TO STA.	ILLINOIS FED. AID PROJECT				

bd53.dgn 11/2/2015 2:05:13 PM U:\users\drivekosgn

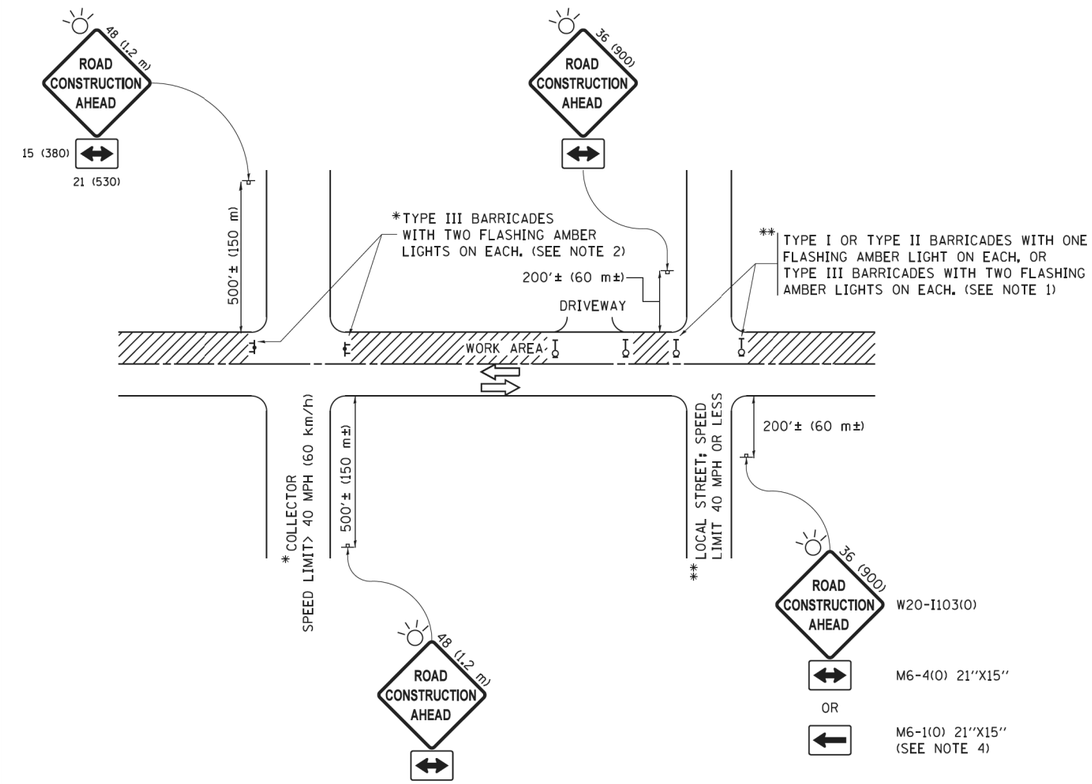

NOTES:

1. SIDE ROAD WITH A SPEED LIMIT OF 40 MPH (60 km/h) OR LESS AS SHOWN ON THE DRAWING AND AS DIRECTED BY THE ENGINEER:

   a) ONE "ROAD CONSTRUCTION AHEAD" SIGN 36 x 36 (900x900) WITH A FLASHER MOUNTED ON IT APPROXIMATELY 200' (60 m) IN ADVANCE OF THE MAIN ROUTE.

   b) THE CLOSED PORTION OF THE MAIN ROUTE SHALL BE PROTECTED BY BLOCKING WITH TYPE I, TYPE II OR TYPE III BARRICADES, 1/3 OF THE CROSS SECTION OF THE CLOSED PORTION.

2. SIDE ROAD WITH A SPEED LIMIT GREATER THAN 40 MPH (60 km/h) AS SHOWN ON THE DRAWING AND AS DIRECTED BY THE ENGINEER:

   a) ONE "ROAD CONSTRUCTION AHEAD" SIGN 48 x 48 (1.2 m x 1.2 m) WITH A FLASHER MOUNTED ON IT APPROXIMATELY 500' (150 m) IN ADVANCE OF THE MAIN ROUTE.

   b) THE CLOSED PORTION OF THE MAIN ROUTE SHALL BE PROTECTED BY BLOCKING WITH TYPE III BARRICADES, 1/2 OF THE CROSS SECTION OF THE CLOSED PORTION.

3. CONES MAY BE SUBSTITUTED FOR BARRICADES OR DRUMS AT HALF THE SPACING DURING DAY OPERATIONS. CONES SHALL BE A MINIMUM OF 28 (710) IN HEIGHT.

4. WHEN THE SIDE ROAD LIES BETWEEN THE BEGINNING OF THE MAINLINE SIGNING AND THE WORK ZONE, A SINGLE HEADED ARROW (M6-1) SHALL BE USED IN LIEU OF THE DOUBLE HEADED ARROW (M6-4).

5. WHEN WORK IS BEING PERFORMED ON A SIDE ROAD OR DRIVEWAY, FOLLOW THE APPLICABLE STANDARD(S). THE DIRECTIONAL ARROW (M6-1 OR M6-4) SHALL BE COVERED OR REMOVED WHEN NO LONGER CONSISTENT WITH THE TRAFFIC CONTROL SET-UP.

6. ADVANCE WARNING SIGNS ARE TO BE OMITTED ON DRIVEWAYS UNLESS OTHERWISE SPECIFIED IN THE PLANS OR BY THE ENGINEER.

7. THE TRAFFIC CONTROL AND PROTECTION FOR SIDE ROADS, INTERSECTIONS, AND DRIVEWAYS SHALL BE INCLUDED IN THE COST OF SPECIFIED TRAFFIC CONTROL STANDARDS OR ITEMS.

All dimensions are in inches (millimeters) unless otherwise shown.

FILE NAME = pw:\\IL084EBIDINTEG.illinois.gov:PWIDOT\Documents\IDOT Offices\District 1\Projects\District\CADData\CADsheets\tc10.dgn	USER NAME = footemj	DESIGNED - L.H.A.	REVISED - A. HOUSEH 10-15-96
		DRAWN -	REVISED - T. RAMMACHER 01-06-00
	PLOT SCALE = 50.000 ' / in.	CHECKED -	REVISED - A. SCHUETZE 07-01-13
Default	PLOT DATE = 9/15/2016	DATE - 06-89	REVISED - A. SCHUETZE 09-15-16

STATE OF ILLINOIS
DEPARTMENT OF TRANSPORTATION

TRAFFIC CONTROL AND PROTECTION FOR SIDE ROADS, INTERSECTIONS, AND DRIVEWAYS

SCALE: NONE | SHEET 1 OF 1 SHEETS | STA. TO STA.

F.A.P RTE.	SECTION	COUNTY	TOTAL SHEETS	SHEET NO.
339	583-R	COOK	186	162
	TC-10	CONTRACT NO. 62B16		
		ILLINOIS FED. AID PROJECT		

tc10.dgn 9/15/2016 12:46:49 PM User=footemj

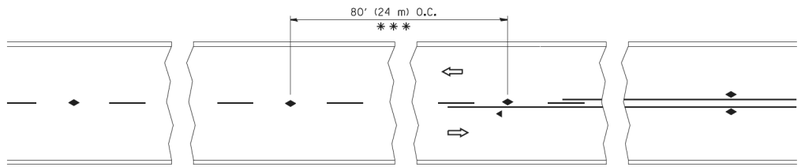

*** REDUCE TO 40' (12 m) O.C. ON CURVES WITH POSTED OR ADVISORY SPEED 45 M.P.H. (70 km/h) OR LESS.

TWO-LANE/TWO-WAY

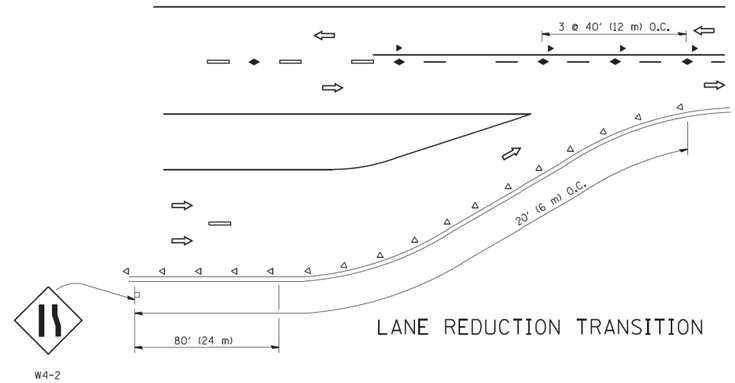

LANE REDUCTION TRANSITION

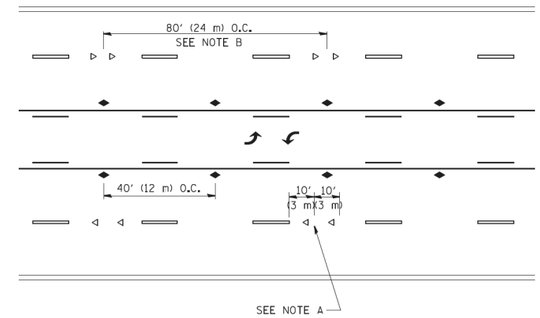

TWO-WAY LEFT TURN

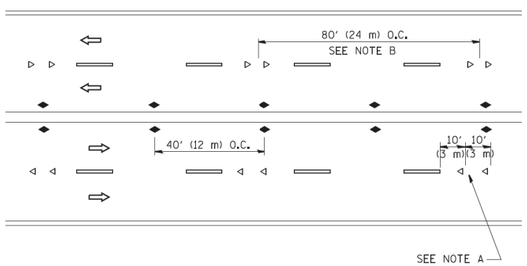

MULTI-LANE/UNDIVIDED

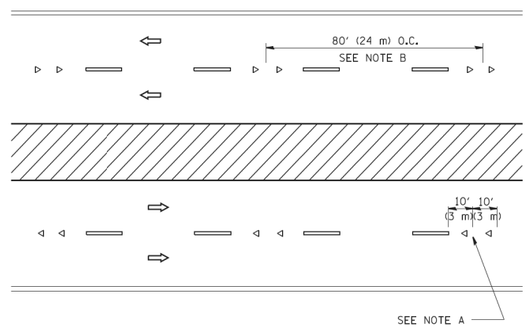

MULTI-LANE/DIVIDED

GENERAL NOTES

1. MARKERS USED WITH DASHED LINES SHALL BE CENTERED IN THE GAP BETWEEN SEGMENTS.
2. MARKERS USED ADJACENT TO SOLID LINES SHALL BE OFFSET 2 TO 3 (50 TO 75) TOWARD TRAFFIC AS SHOWN.
3. MARKERS THROUGH TANGENTS LESS THAN 500' (150 m) IN LENGTH BETWEEN CURVES SHALL BE INSTALLED AT THE LESSER OF THE TWO CURVE SPACINGS.

SYMBOLS

- YELLOW STRIPE
- WHITE STRIPE
- ONE-WAY AMBER MARKER
- ONE-WAY CRYSTAL MARKER (W/O)
- TWO-WAY AMBER MARKER

LANE MARKER NOTES

A. USE DOUBLE LANE LINE MARKERS SPACED AS SHOWN.

B. REDUCE TO 40' (12 m) O.C. ON CURVES WHERE ADVISORY SPEEDS ARE 10 M.P.H (20 km/h) LOWER THAN POSTED SPEEDS.

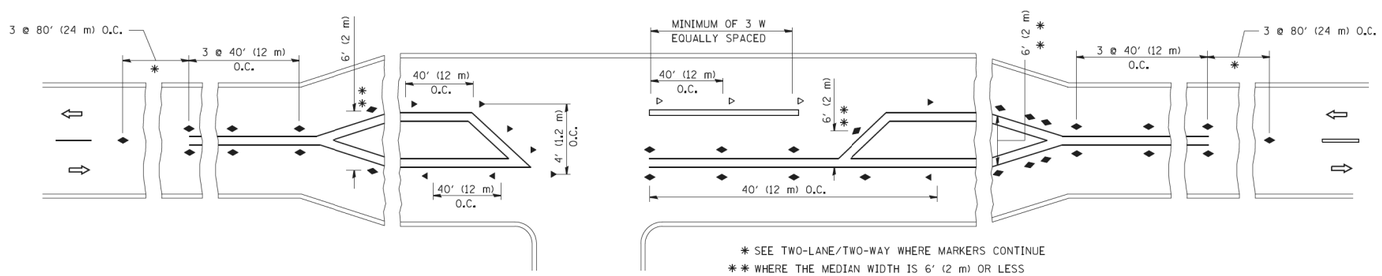

* SEE TWO-LANE/TWO-WAY WHERE MARKERS CONTINUE

** WHERE THE MEDIAN WIDTH IS 6' (2 m) OR LESS USE TWO-WAY MARKERS.

LEFT TURN

All dimensions are in inches (millimeters) unless otherwise shown.

FILE NAME = c:\pw_work\pwidot\leysa\d0108315\tc11.dgn	USER NAME = leysa	DESIGNED -	REVISED - T. RAMMACHER 09-19-94	STATE OF ILLINOIS DEPARTMENT OF TRANSPORTATION
		DRAWN -	REVISED - T. RAMMACHER 03-12-99	
	PLOT SCALE = 50.000 ' / IN.	CHECKED -	REVISED - T. RAMMACHER 01-06-00	
	PLOT DATE = 3/2/2011	DATE -	REVISED - C. JUCIUS 09-09-09	

TYPICAL APPLICATIONS
RAISED REFLECTIVE PAVEMENT MARKERS (SNOW-PLOW RESISTANT)

SCALE: NONE | SHEET NO. 1 OF 1 SHEETS | STA. | TO STA.

F.A.P. RTE.	SECTION	COUNTY	TOTAL SHEETS	SHEET NO.
339	583-R	COOK	186	163
	TC-11	CONTRACT NO. 62B16		

FED. ROAD DIST. NO. 1 | ILLINOIS | FED. AID PROJECT

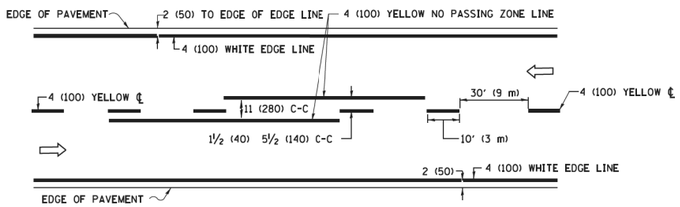

2–LANE ROADWAY

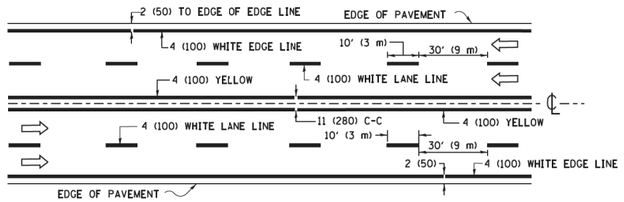

MULTI–LANE UNDIVIDED

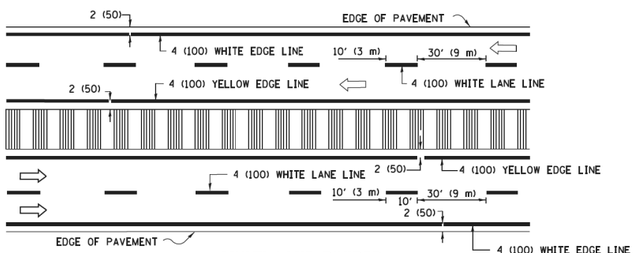

MULTI–LANE DIVIDED

WITH MEDIAN

TYPICAL LANE AND EDGE LINE MARKING

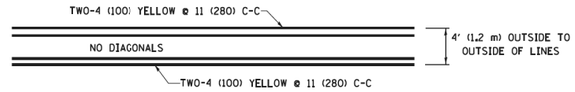

4' (1.2 m) WIDE MEDIANS ONLY

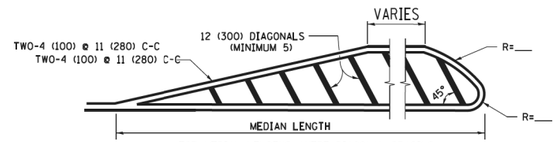

FOR MEDIAN LENGTHS WHERE DIAGONAL SPACING CANNOT BE ATTAINED, USE 5 (FIVE) EQUALLY SPACED DIAGONAL LINES.

DIAGONAL LINE SPACING: 50' (15 m) C-C (LESS THAN 30MPH (50 km/h))
75' (25 m) C-C 30MPH (50 km/h) TO 45MPH (70 km/h))
150' (45 m) C-C (MORE THAN 45MPH (70 km/h))

MEDIANS OVER 4' (1.2 m) WIDE

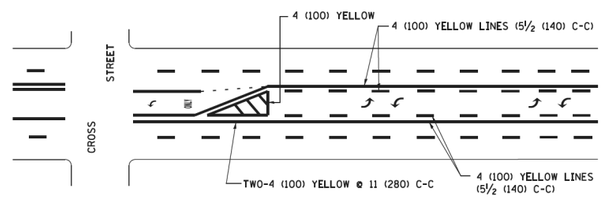

A MINIMUM OF TWO PAIRS OF TURN ARROWS SHALL BE USED, WHITE IN COLOR. ADDITIONAL PAIRS SHALL BE PLACED AT 200' (60 m) TO 300' (90 m) INTERVALS.

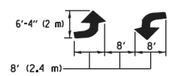

MEDIAN WITH TWO–WAY LEFT TURN LANE

TYPICAL PAINTED MEDIAN MARKING

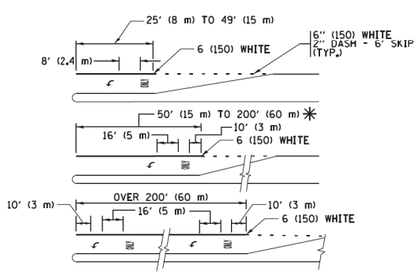

FULL SIZE LETTERS 8' (2.4 m) AND ARROWS SHALL BE USED.
↰ AREA = 15.6 SQ. FT. (1.5 m^2) ONLY AREA = 20.8 SQ. FT. (1.9 m^2)

✳ TURN LANES IN EXCESS OF 400' (120 m) IN LENGTH MAY HAVE AN ADDITIONAL SET OF ARROW - "ONLY" INSTALLED MIDWAY BETWEEN THE OTHER TWO SETS OF ARROW - "ONLY".

TYPICAL LEFT (OR RIGHT) TURN LANE

TYPICAL TURN LANE MARKING

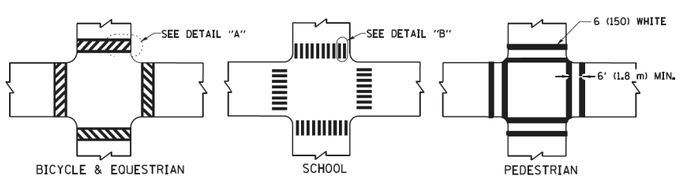

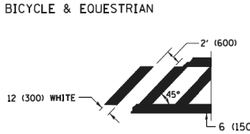

DETAIL "A"

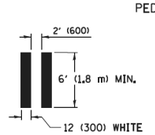

DETAIL "B"

TYPICAL CROSSWALK MARKING

✳ MARKINGS SHALL BE INSTALLED PARALLEL TO THE CENTERLINE OF THE ROAD WHICH IT CROSSES

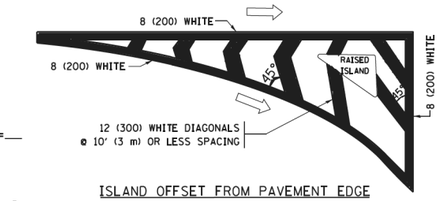

ISLAND OFFSET FROM PAVEMENT EDGE

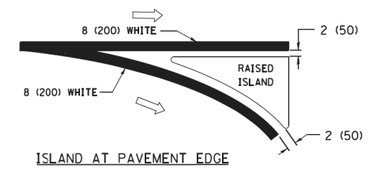

ISLAND AT PAVEMENT EDGE

TYPICAL ISLAND MARKING

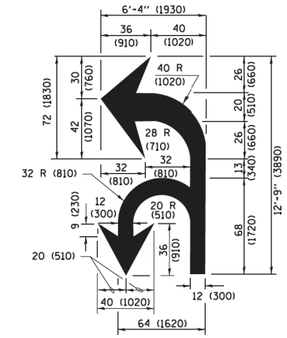

COMBINATION LEFT AND U–TURN

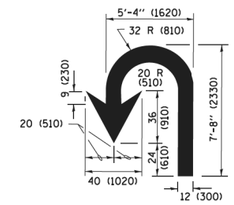

U–TURN

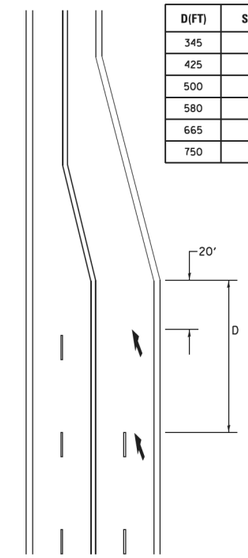

D(FT)	SPEED LIMIT
345	30
425	35
500	40
580	45
665	50
750	55

LANE REDUCTION TRANSITION

✳ LANE REDUCTION ARROWS REQUIRED AT SPEEDS OF 45 MPH OR GREATER OR WHEN SPECIFIED IN PLANS.

TYPE OF MARKING	WIDTH OF LINE	PATTERN	COLOR	SPACING /REMARKS
CENTERLINE ON 2 LANE PAVEMENT	4 (100)	SKIP-DASH	YELLOW	10' (3 m) LINE WITH 30' (9 m) SPACE
CENTERLINE ON MULTI-LANE UNDIVIDED PAVEMENT	2 @ 4 (100)	SOLID	YELLOW	11 (280) C-C
NO PASSING ZONE LINES: FOR ONE DIRECTION FOR BOTH DIRECTIONS	4 (100) 2 @ 4 (100)	SOLID SOLID	YELLOW YELLOW	5½ (140) C-C FROM SKIP-DASH CENTERLINE 11 (280) C-C OMIT SKIP-DASH CENTERLINE BETWEEN
LANE LINES	4 (100) 5 (125) ON FREEWAYS	SKIP-DASH SKIP-DASH	WHITE WHITE	10' (3 m) LINE WITH 30' (9 m) SPACE
DOTTED LINES (EXTENSIONS OF CENTER, LANE OR TURN LANE MARKINGS)	SAME AS LINE BEING EXTENDED	SKIP-DASH	SAME AS LINE BEING EXTENDED	2' (600) LINE WITH 6' (1.8 m) SPACE
EDGE LINES	4 (100)	SOLID	YELLOW-LEFT WHITE-RIGHT	OUTLINE MEDIANS IN YELLOW
TURN LANE MARKINGS	6 (150) LINE; FULL SIZE LETTERS & SYMBOLS (8' (2.4m))	SOLID	WHITE	SEE TYPICAL TURN LANE MARKING DETAIL
TWO WAY LEFT TURN MARKING	2 @ 4 (100) EACH DIRECTION 8' (2.4m) LEFT ARROW	SKIP-DASH AND SOLID IN PAIRS	YELLOW WHITE	10' (3 m) LINE WITH 30' (9 m) SPACE FOR SKIP-DASH; 5½ (140) C-C BETWEEN SOLID LINE AND SKIP-DASH LINE SEE TYPICAL TWO-WAY LEFT TURN MARKING DETAIL
CROSSWALK LINES (PEDESTRIAN) A. DIAGONALS (BIKE & EQUESTRIAN) B. LONGITUDINAL BARS (SCHOOL)	2 @ 6 (150) 12 (300) @ 45° 12 (300) @ 90°	SOLID SOLID SOLID	WHITE WHITE WHITE	NOT LESS THAN 6' (1.8 m) APART 2' (600) APART 2' (600) APART SEE TYPICAL CROSSWALK MARKING DETAILS.
STOP LINES	24 (600)	SOLID	WHITE	PLACE 4' (1.2 m) IN ADVANCE OF AND PARALLEL TO CROSSWALK, IF PRESENT. OTHERWISE, PLACE AT DESIRED STOPPING POINT. PARALLEL TO CROSSROAD CENTERLINE, WHERE POSSIBLE
PAINTED MEDIANS	2 @ 4 (100) WITH 12 (300) DIAGONALS @ 45° NO DIAGONALS USED FOR 4' (1.2 m) WIDE MEDIANS	SOLID	YELLOW: TWO WAY TRAFFIC WHITE: ONE WAY TRAFFIC	11 (280) C-C FOR THE DOUBLE LINE SEE TYPICAL PAINTED MEDIAN MARKING.
GORE MARKING AND CHANNELIZING LINES	8 (200) WITH 12 (300) DIAGONALS @ 45°	SOLID	WHITE	DIAGONALS: 15' (4.5 m) C-C (LESS THAN 30MPH (50 km/h)) 20' (6 m) C-C 30MPH (50 km/h) TO 45MPH (70 km/h)) 30' (9 m) C-C (OVER 45MPH (70 km/h))
RAILROAD CROSSING	24 (600) TRANSVERSE LINES; "RR" IS 6' (1.8 m) LETTERS; 16 (400) LINE FOR "X"	SOLID	WHITE	SEE STATE STANDARD 780001 AREA OF: "R"=3.6 SQ. FT. (0.33 m^2) EACH "X"=54.0 SQ. FT. (5.0 m^2)
SHOULDER DIAGONALS (REQUIRED FOR SHOULDERS ≥ 8')	12 (300) @ 45°	SOLID	WHITE - RIGHT YELLOW - LEFT	50' (15 m) C-C (LESS THAN 30MPH (50 km/h)) 75' (25 m) C-C (30 MPH (50 km/h) TO 45MPH (70 km/h)) 150' (45 m) C-C (OVER 45MPH (70 km/h))
U TURN ARROW	SEE DETAIL	SOLID	WHITE	16.3 SF
2 ARROW COMBINATION LEFT AND U TURN	SEE DETAIL	SOLID	WHITE	30.4 SF

FOR FURTHER DETAILS ON PAVEMENT MARKING REFER TO STANDARD SPECIFICATIONS FOR ROAD AND BRIDGE CONSTRUCTION AND STATE STANDARD 780001.

All dimensions are in inches (millimeters) unless otherwise shown.

FILE NAME = pw:\\IL084EBIDINTEG.illinois.gov:PWIDOT\Documents\IDOT Offices\District 1\Projects\Dist_Stds\DRAWN\CADData\CADsheets\tc13.dgn	USER NAME = footemj	DESIGNED - EVERS	REVISED - C. JUCIUS 09-09-09
			REVISED - C. JUCIUS 07-01-13
	PLOT SCALE = 50.000 ' / in.	CHECKED -	REVISED - C. JUCIUS 12-21-15
Default	PLOT DATE = 4/13/2016	DATE - 03-19-90	REVISED - C. JUCIUS 04-12-16

STATE OF ILLINOIS
DEPARTMENT OF TRANSPORTATION

DISTRICT ONE
TYPICAL PAVEMENT MARKINGS

SCALE: NONE | SHEET 1 OF 1 SHEETS | STA. TO STA.

F.A.P RTE.	SECTION	COUNTY	TOTAL SHEETS	SHEET NO.
339	583-R	COOK	186	164
	TC-13	CONTRACT NO. 62B16		
		ILLINOIS FED. AID PROJECT		

tc13.dgn 4/13/2016 2:04:04 PM User=footemj

TURN BAY ENTRANCE AT START OF LANE CLOSURE TAPER

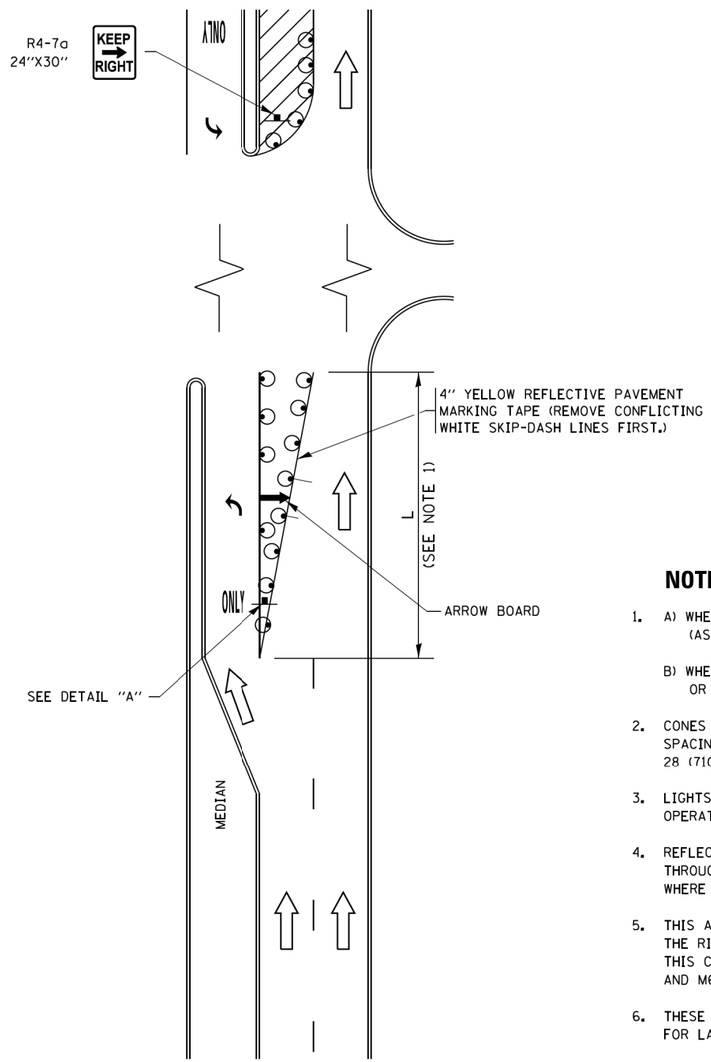

FIGURE 1

LEGEND

- WORK AREA
- LANE OPEN TO TRAFFIC
- ARROW BOARD
- TYPE I OR II BARRICADE OR DRUM WITH STEADY BURN LIGHT
- DRUM WITH STEADY BURN LIGHT
- SIGN ASSEMBLY
- TYPE I OR II CHECK BARRICADE WITH FLASHING LIGHT

NOTES:

1. A) WHEN "L" IS ≤ THE STORAGE LENGTH OF THE TURN LANE (AS SHOWN IN FIG. 1), USE FIGURE 1.

   B) WHEN "L" IS > THE STORAGE LENGTH OF THE TURN LANE OR THE TURN LANE IS WITHIN THE LANE CLOSURE. USE FIGURE 2.

2. CONES MAY BE SUBSTITUTED FOR BARRICADES OR DRUMS AT HALF THE SPACING DURING DAY OPERATIONS. CONES SHALL BE A MINIMUM OF 28 (710) IN HEIGHT.

3. LIGHTS WILL NOT BE REQUIRED ON BARRICADES OR DRUMS FOR DAY OPERATIONS. ALL LIGHTS SHALL BE MONODIRECTIONAL.

4. REFLECTIVE TEMPORARY PAVEMENT MARKINGS SHALL BE PLACED THROUGHOUT THE BARRICADED AREAS OF EACH TURN BAY AS SHOWN WHERE THE CLOSURE TIME IS GREATER THAN FOURTEEN (14) DAYS.

5. THIS APPLICATION ALSO APPLIES WHEN WORK IS BEING PERFORMED IN THE RIGHT LANE(S) AND THE RIGHT TURN BAY IS TO REMAIN OPEN. UNDER THIS CONDITION, "RIGHT TURN LANE" R3-I100R 24 x 24 (600 x 600) AND M6-2R 21 x 15 (530 x 380) SHALL BE USED.

6. THESE CONTROLS SHALL SUPPLEMENT MAINLINE TRAFFIC CONTROL FOR LANE CLOSURES.

7. THE SIGNS SHALL BE MOUNTED ABOVE THE BARRICADES/DRUMS ON SEPARATE SIGN SUPPORTS THAT MEET NCHRP 350 OR MASH PREQUIREMENTS.

8. TRAFFIC CONTROL AND PROTECTION AT TURN BAYS (TO REMAIN OPEN TO TRAFFIC) SHALL BE INCLUDED IN THE COST OF SPECIFIED TRAFFIC CONTROL STANDARDS OR ITEMS.

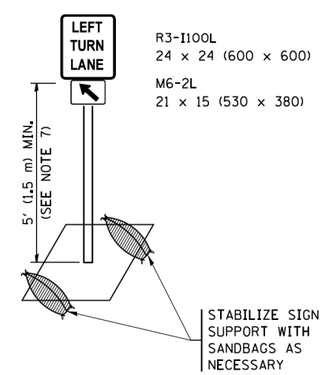

DETAIL A

TURN BAY ENTRANCE WITHIN A LANE CLOSURE

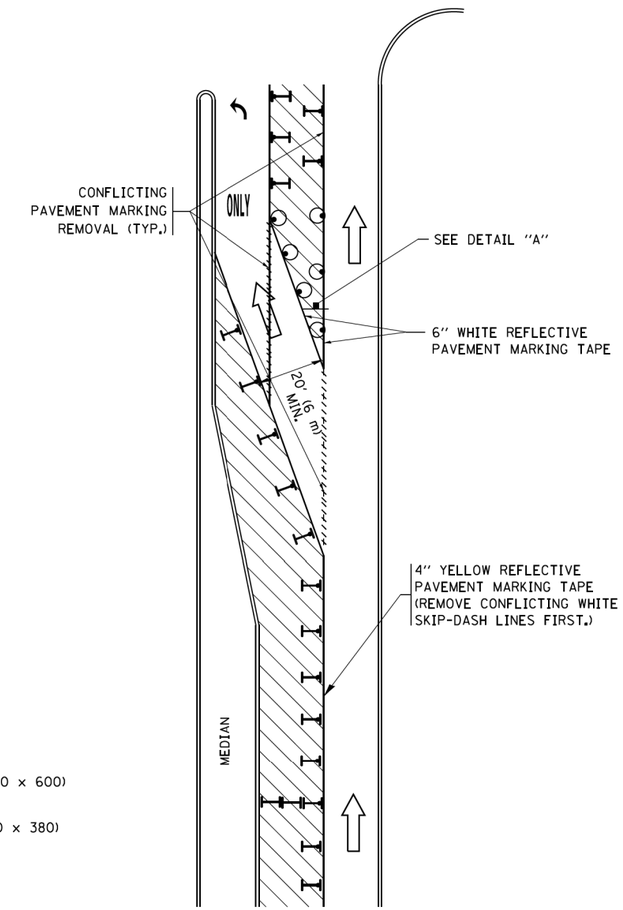

FIGURE 2

All dimensions are in inches (millimeters) unless otherwise shown.

FILE NAME = pw:\\ILD84EBIDINTEG.illinois.gov:PWIDOT\Documents\IDOT Offices\District 1\Projects\District ADData\CAD HOUSEH 41-07-95	USER NAME = footemj	REVISED -T. RAMMACHER 09-08-94	REVISED - R. BORO 09-14-09
		REVISED - A. HOUSEH 41-07-95	REVISED - A. SCHUETZE 07-01-13
	PLOT SCALE = 50.0000 ' / in.	REVISED - A. HOUSEH 10-12-96	REVISED - A. SCHUETZE 09-15-16
Default	PLOT DATE = 9/15/2016	REVISED -T. RAMMACHER 01-06-00	REVISED -

STATE OF ILLINOIS
DEPARTMENT OF TRANSPORTATION

TRAFFIC CONTROL AND PROTECTION AT TURN BAYS (TO REMAIN OPEN TO TRAFFIC)

SCALE: NONE | SHEET 1 OF 1 SHEETS | STA. TO STA.

F.A.P RTE.	SECTION	COUNTY	TOTAL SHEETS	SHEET NO.
339	583-R	COOK	186	165
	TC-14	CONTRACT NO. 62B16		
	ILLINOIS FED. AID PROJECT			

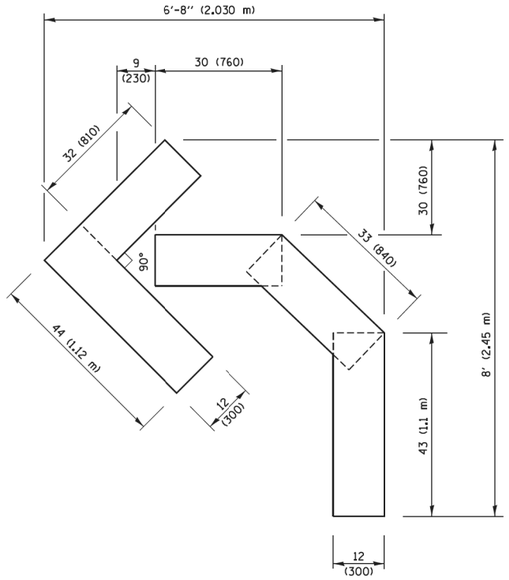

QUANTITY

4 (100) LINE = 45.5 ft. (13.9 m)
15.2 sq. ft. (1.41 sq. m)

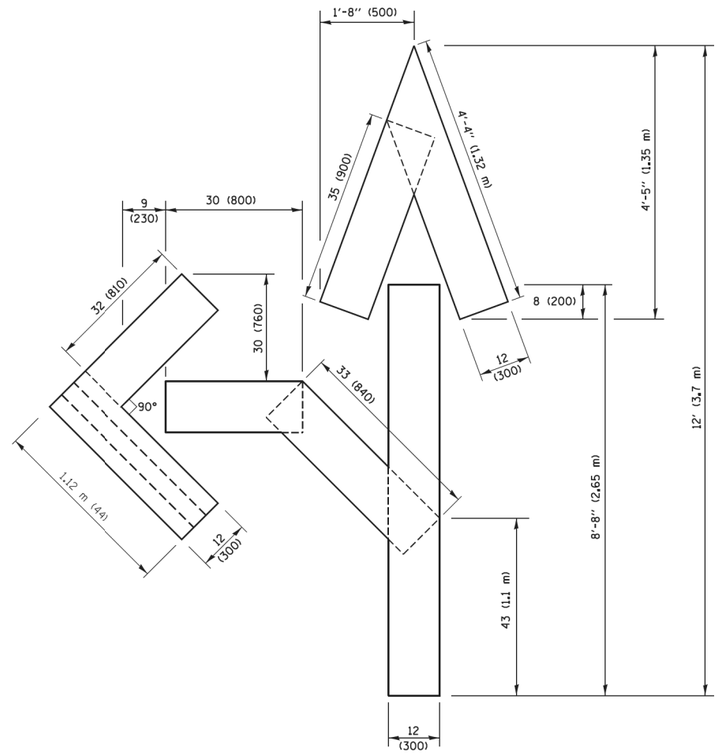

QUANTITY

4 (100) LINE = 82.5 ft. (25.1 m)
27.5 sq. ft. (2.53 sq. m)

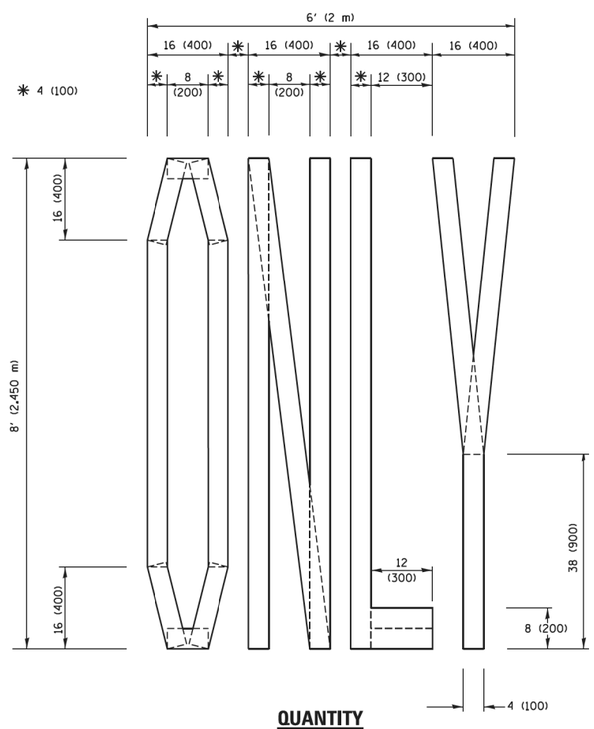

QUANTITY

4 (100) LINE = 64.1 ft. (19.5 m)
21.4 sq. ft. (1.99 sq. m)

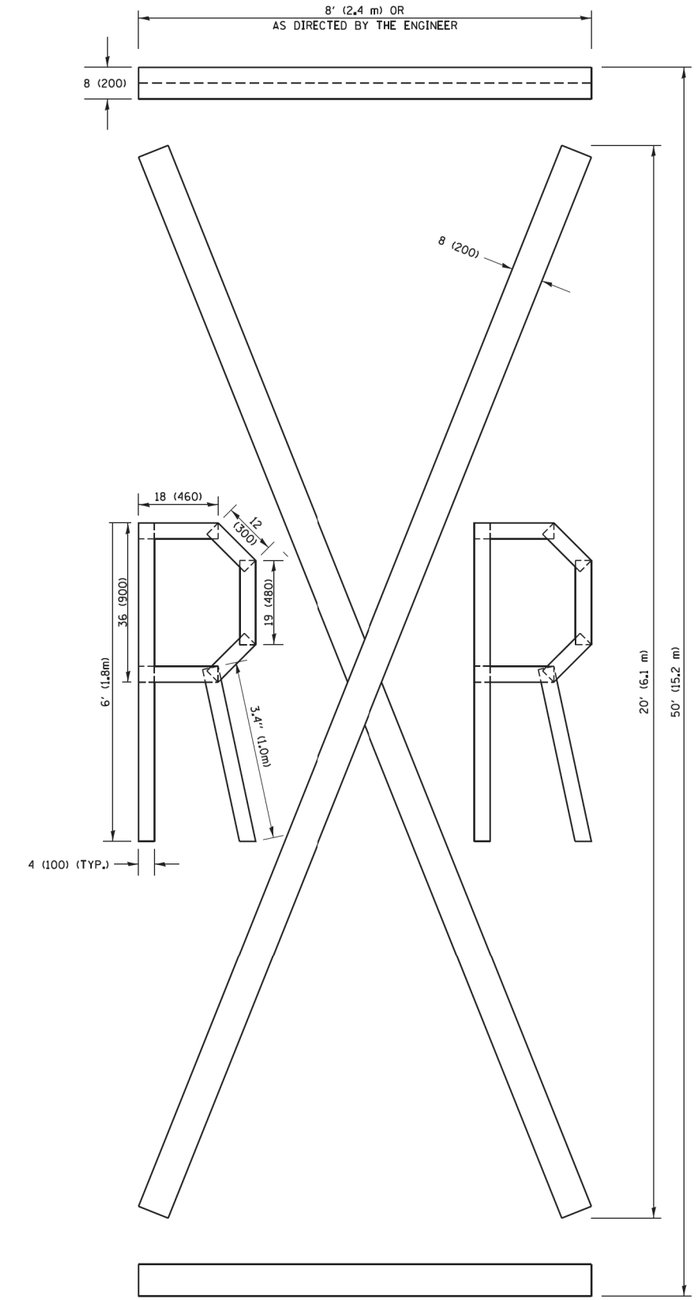

QUANTITY

4 (100) LINE = 225.9 ft. (68.9 m)
75.3 sq. ft. (6.99 sq. m)

NOTE:

ALL QUANTITIES OF PLACEMENT ARE REPRESENTED IN LINEAR FEET OF 4" LINES TO MATCH THE 4" TEMPORARY TAPE PAY ITEM AND REPRESENTS THE TOTAL QUANTITY OF 4" TAPE REQUIRED.

All dimensions are in inches (millimeters) unless otherwise shown.

FILE NAME = pw:\\IL084EBIDINTEG.illinois.gov:PWIDOT\Documents\IDOT Offices\District 1\Projects\District\CADData\CADsheets\tc16.dgn	USER NAME = footemj	DESIGNED -	REVISED -T. RAMMACHER 03-02-98
		DRAWN -	REVISED -E. GOMEZ 08-28-00
	PLOT SCALE = 50.0000 ' / in.	CHECKED -	REVISED -E. GOMEZ 08-28-00
	PLOT DATE = 9/15/2016	DATE - 09-18-94	REVISED -A. SCHUETZE 09-15-16

STATE OF ILLINOIS
DEPARTMENT OF TRANSPORTATION

SHORT TERM PAVEMENT MARKING LETTERS AND SYMBOLS

SCALE: NONE | SHEET NO. 1 OF 1 SHEETS | STA. TO STA.

F.A.P. RTE.	SECTION	COUNTY	TOTAL SHEETS	SHEET NO.
339	583-R	COOK	186	166
	TC-16	CONTRACT NO. 62B16		
FED. ROAD DIST. NO. 1	ILLINOIS	FED. AID PROJECT		

ROUTE MARKERS

- 30 — FOR U.S. ROUTES M1-40-2424
- ILL 53 — FOR ILLINOIS ROUTES M1-50-2424
- MAIN STREET — R.R. UNMARKED ROUTES SPECIAL 24" x 18" VARIABLE 4" BLACK LETTERS ON WHITE REFLECTIVE BACKGROUND

ARROWS SIGNS

- M5-1L-2115
- M5-1R-2115
- M6-1-2115
- M6-1-2115
- M6-3-2115

CARDINAL DIRECTION & DETOUR SIGNS

- NORTH — M3-1-2412
- EAST — M3-2-2412
- SOUTH — M3-3-2412
- WEST — M3-4-2412
- DETOUR — M4-8-2412

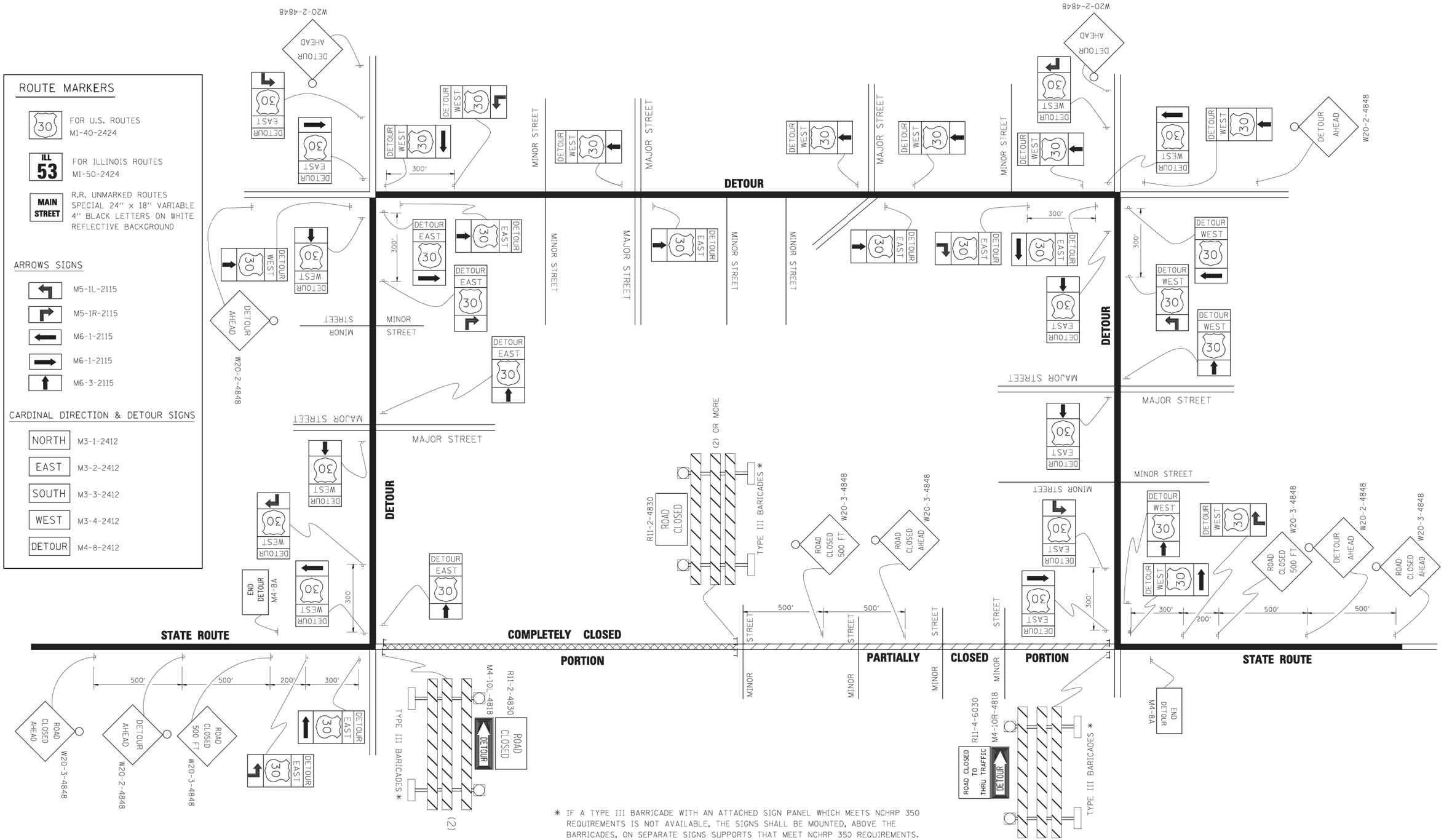

* IF A TYPE III BARRICADE WITH AN ATTACHED SIGN PANEL WHICH MEETS NCHRP 350 REQUIREMENTS IS NOT AVAILABLE, THE SIGNS SHALL BE MOUNTED, ABOVE THE BARRICADES, ON SEPARATE SIGNS SUPPORTS THAT MEET NCHRP 350 REQUIREMENTS.

FILE NAME = c:\pw_work\PWIDOT\DRIVAKOSGN\d0103115\tc21.dgn	USER NAME = drivakosgn	DESIGNED -	REVISED - 10-18-02
		DRAWN -	REVISED - R. BORO 09-14-09
	PLOT SCALE = 49.9999 ' / IN.	CHECKED -	REVISED -
	PLOT DATE = 9/14/2009	DATE -	REVISED -

STATE OF ILLINOIS
DEPARTMENT OF TRANSPORTATION

DETOUR SIGNING FOR CLOSING STATE HIGHWAYS

SCALE: NONE | SHEET NO. 1 OF 1 SHEETS | STA. | TO STA.

F.A.P. RTE.	SECTION	COUNTY	TOTAL SHEETS	SHEET NO.
339	583-R	COOK	186	167
	TC-21	CONTRACT NO. 62B16		

FED. ROAD DIST. NO. 1 | ILLINOIS | FED. AID PROJECT

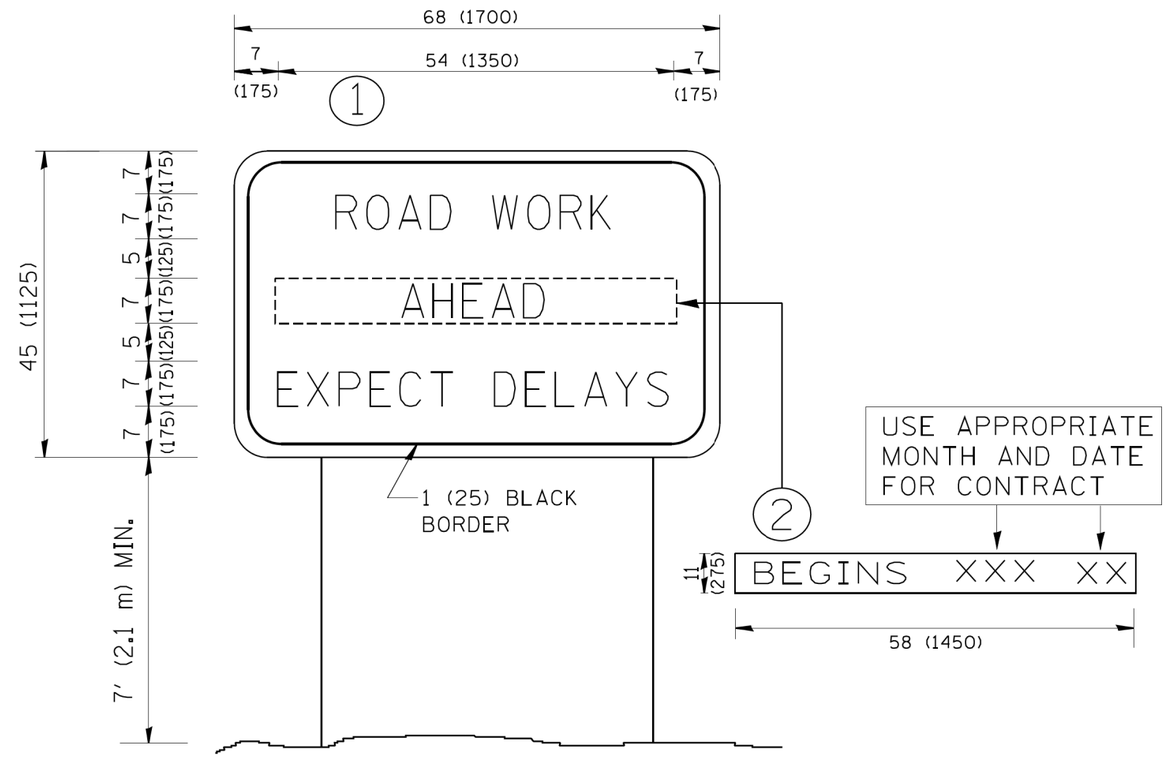

NOTES:

1. USE BLACK LETTERING ON ORANGE BACKGROUND.
2. ERECT SIGNS IN ADVANCE OF THE LOCATION FOR THE "ROAD CONSTRUCTION AHEAD" SIGN AT LOCATIONS AS DIRECTED BY THE ENGINEER.
3. ERECT SIGN 1 WITH INSTALLED PANEL 2 ONE WEEK PRIOR TO THE START OF CONSTRUCTION.
4. REMOVE PANEL 2 SOON AFTER THE START OF CONSTRUCTION.
5. SEE SPECIAL PROVISION FOR "TEMPORARY INFORMATION SIGNING" FOR ADDITIONAL INFORMATION.
6. ONE SIGN ASSEMBLY EQUALS 25.70 SQ. FT. (2.3 SQ. M.)
7. SHALL BE PAID FOR AS TEMPORARY INFORMATION SIGNING.

ALL DIMENSIONS ARE IN INCHES (MILLIMETERS) UNLESS OTHERWISE SHOWN.

FILE NAME = W:\diststd\22x34\tc22.dgn	USER NAME = gaglianobt	DESIGNED -	REVISED - R. MIRS 09-15-97	STATE OF ILLINOIS DEPARTMENT OF TRANSPORTATION	ARTERIAL ROAD INFORMATION SIGN			F.A.P. RTE.	SECTION	COUNTY	TOTAL SHEETS / SHEET NO.
		DRAWN -	REVISED - R. MIRS 12-11-97					339	583-R	COOK	186 / 168
	PLOT SCALE = 50.000 ' / IN.	CHECKED -	REVISED - T. RAMMACHER 02-02-99						TC-22	CONTRACT NO. 62B16	
	PLOT DATE = 1/4/2008	DATE -	REVISED - C. JUCIUS 01-31-07		SCALE: NONE	SHEET NO. 1 OF 1 SHEETS	STA. TO STA.	FED. ROAD DIST. NO. 1	ILLINOIS	FED. AID PROJECT	

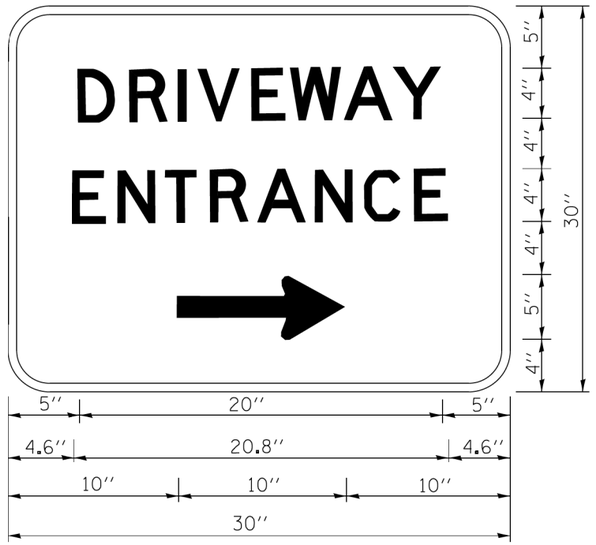

3.0'' RADIUS, 0.5'' BORDER, WHITE ON GREEN; REFLECTORIZED
''DRIVEWAY'' D; ''ENTRANCE'' D; STANDARD ARROW CUSTOM 12.0'' × 5.0''

NOTES:

1. HALF OF THE SIGNS WILL REQUIRE A LEFT HAND FACING ARROW.
2. TWO SIGNS SHALL BE USED AT EACH COMMERCIAL ENTRANCE PLACED BACK-TO-BACK: ONE WITH A RIGHT HAND ARROW (SHOWN) SHALL BE PLACED ON THE NEAR RIGHT SIDE THE DRIVEWAY AND ONE WITH A LEFT HAND ARROW SHALL BE PLACED ON THE FAR LEFT SIDE OF THE DRIVEWAY.
3. SIGNS TO BE PAID FOR AS ITEM ''TEMPORARY INFORMATION SIGNING''.

FILE NAME = c:\pw_work\pwidot\gaglianobt\d0108315\tc26.dgn	USER NAME = gaglianobt	DESIGNED -	REVISED - C. JUCIUS 02-15-07	STATE OF ILLINOIS DEPARTMENT OF TRANSPORTATION	DRIVEWAY ENTRANCE SIGNING			F.A.P RTE.	SECTION	COUNTY	TOTAL SHEETS	SHEET NO.
		DRAWN -	REVISED -					339	583-R	COOK	186	169
	PLOT SCALE = 50.000 ' / in.	CHECKED -	REVISED -					TC-26		CONTRACT NO. 62B16		
	PLOT DATE = 12/13/2012	DATE -	REVISED -		SCALE: NONE	SHEET NO. 1 OF 1 SHEETS	STA. TO STA.	FED. ROAD DIST. NO. 1	ILLINOIS	FED. AID PROJECT		

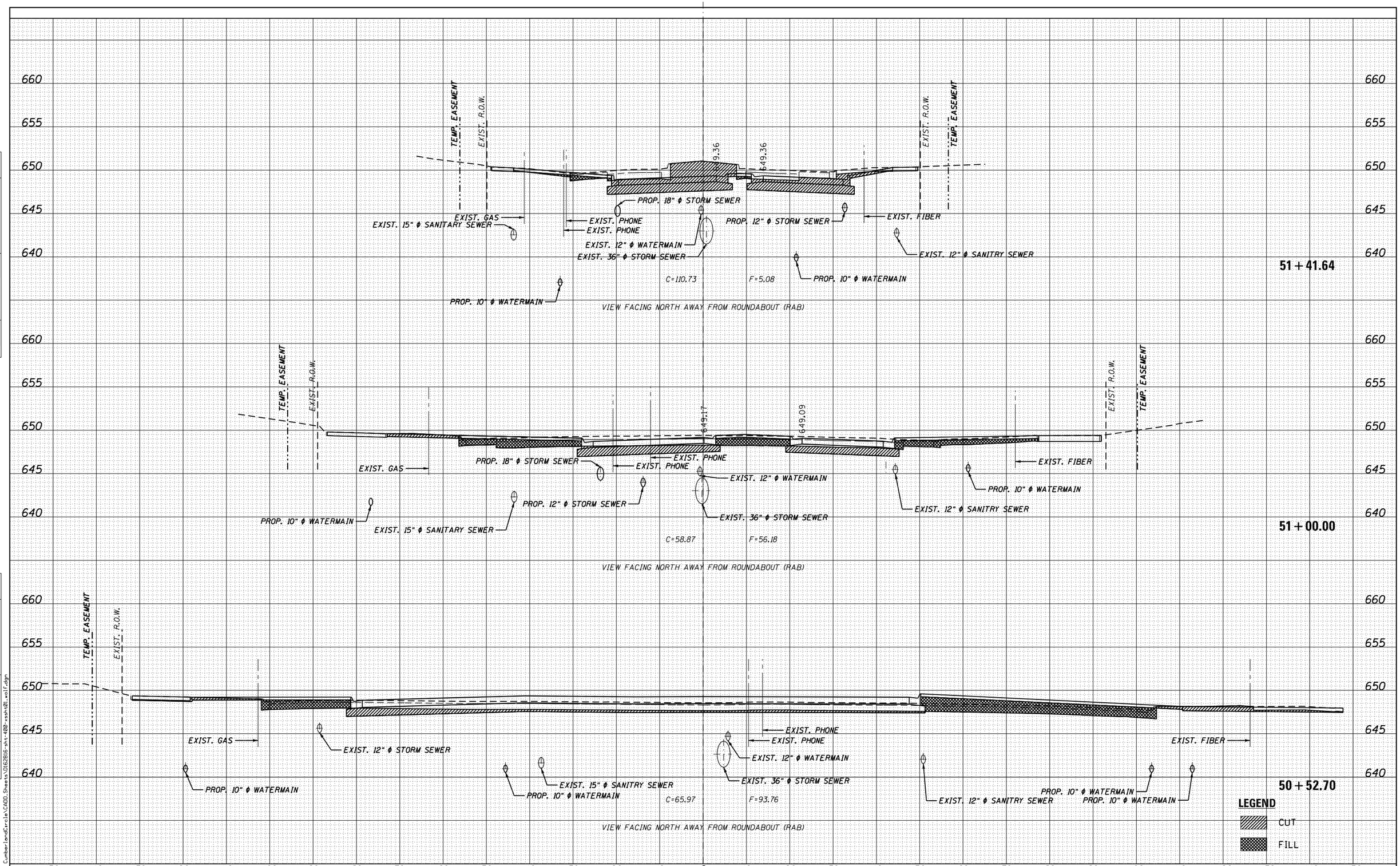

FINAL SURVEY		BY	DATE
NOTE BOOK	SURVEYED		
	PLOTTED		
	TEMPLATE		
	AREAS		
NO.	AREAS CHECKED		

ORIGINAL SURVEY		BY	DATE
NOTE BOOK	SURVEYED		
	PLOTTED		
	TEMPLATE		
	AREAS		
NO.	AREAS CHECKED		

P:\1501-630 W07 CumberlandCircle\CADD\Sheets\D162B16-sht-400-ssht01_wolf.dgn 12/1/2017 3:50:30 PM

HBM ENGINEERING GROUP, LLC

USER NAME = Kendrabant	DESIGNED - MAA	REVISED - 12/01/2017	
	DRAWN - MAA	REVISED -	
PLOT SCALE = 20.0000 ' / in.	CHECKED - JMG	REVISED -	
PLOT DATE = 12/1/2017	DATE - 10/17/2017	REVISED -	

STATE OF ILLINOIS
DEPARTMENT OF TRANSPORTATION

CROSS SECTIONS - WOLF RD

SCALE: $SCALE$ | SHEET 1 OF 17 SHEETS | STA. TO STA.

F.A.P. RTE.	SECTION	COUNTY	TOTAL SHEETS	SHEET NO.
339	583-R	COOK	186	170

CONTRACT NO. 62B16

ILLINOIS

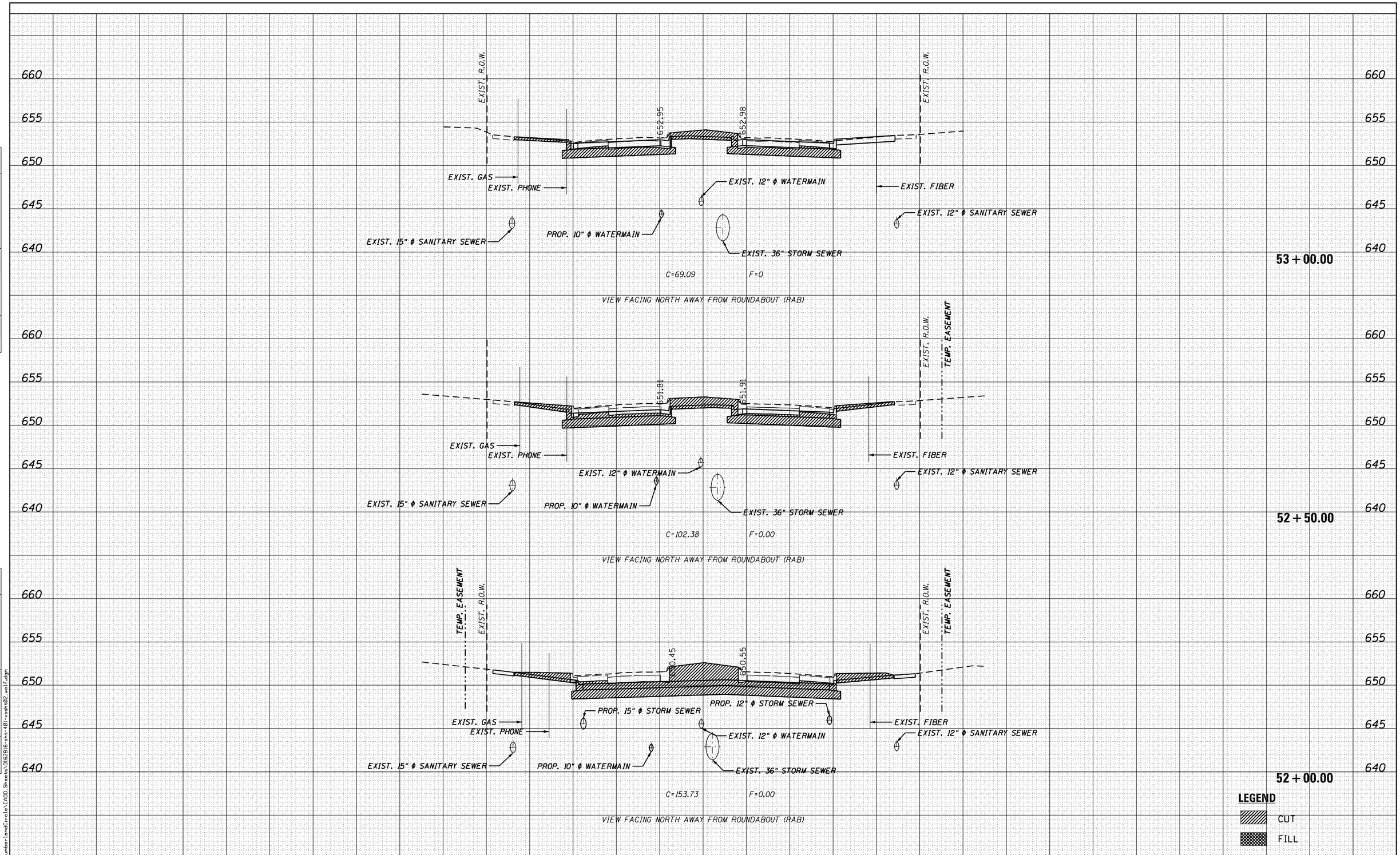

FINAL SURVEY	BY	DATE
SURVEYED		
PLOTTED		
TEMPLATE		
AREAS		
AREAS CHECKED		
NOTE BOOK		
NO.		

ORIGINAL SURVEY	BY	DATE
SURVEYED		
PLOTTED		
TEMPLATE		
AREAS		
AREAS CHECKED		
NOTE BOOK		
NO.		

P:\1501-630 W07 CumberlandCircle\CADD_Sheets\D162B16-sht-401-xsht02-wolf.dgn 12/1/2017 3:50:31 PM

HBM ENGINEERING GROUP, LLC

USER NAME = Kendrabant	DESIGNED - MAA	REVISED - 12/01/2017	
	DRAWN - MAA	REVISED -	
PLOT SCALE = 20.0000 ' / in.	CHECKED - JMG	REVISED -	
PLOT DATE = 12/1/2017	DATE - 10/17/2017	REVISED -	

STATE OF ILLINOIS
DEPARTMENT OF TRANSPORTATION

CROSS SECTIONS - WOLF RD

SCALE: $SCALE$ | SHEET 2 OF 17 SHEETS | STA. TO STA.

F.A.P. RTE.	SECTION	COUNTY	TOTAL SHEETS	SHEET NO.
339	583-R	COOK	186	171

CONTRACT NO. 62B16

ILLINOIS

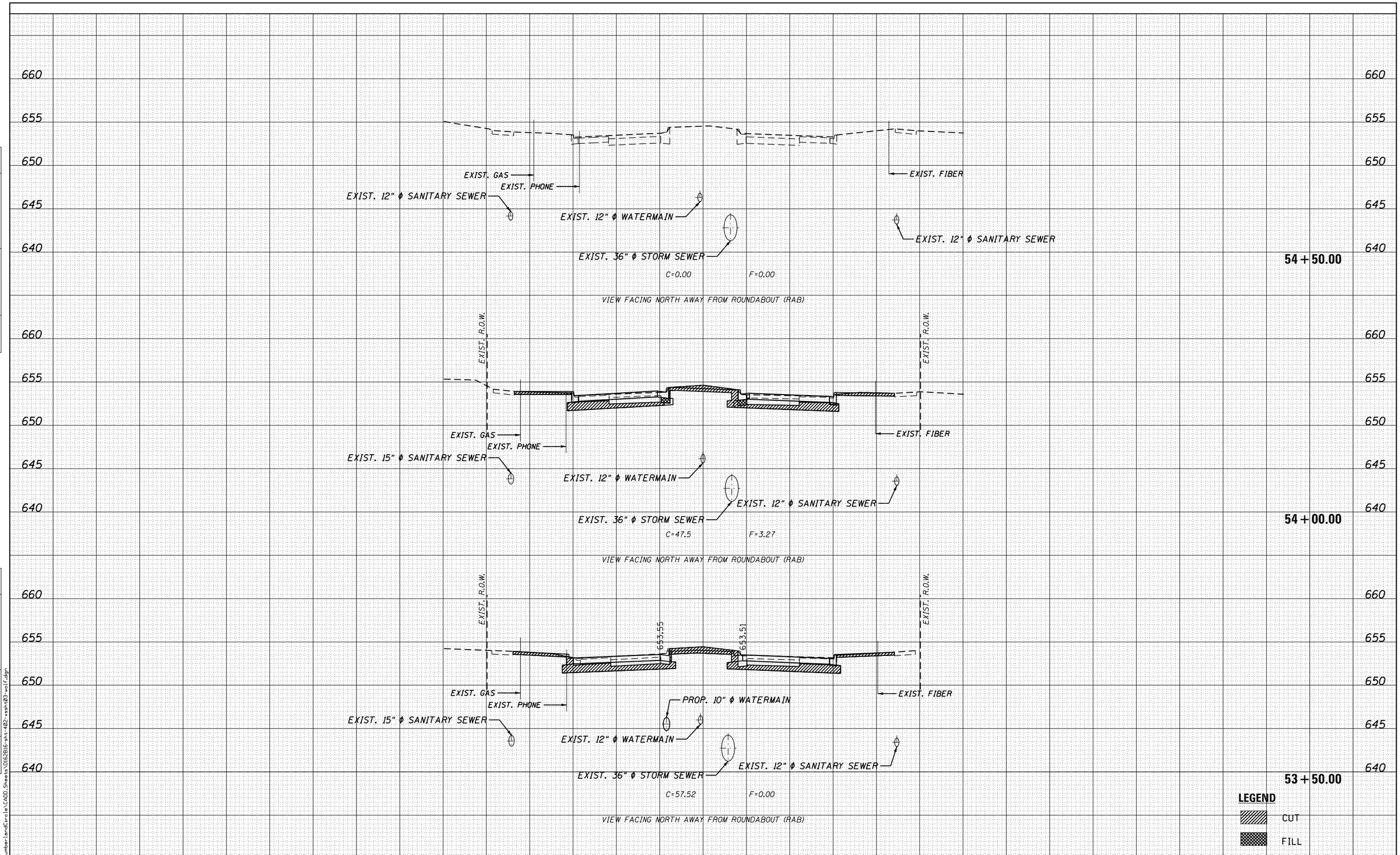

FINAL SURVEY		BY	DATE
NOTE BOOK	SURVEYED		
	PLOTTED		
	TEMPLATE		
	AREAS		
NO.	AREAS CHECKED		

ORIGINAL SURVEY		BY	DATE
NOTE BOOK	SURVEYED		
	PLOTTED		
	TEMPLATE		
	AREAS		
NO.	AREAS CHECKED		

P:\1501-630 W07 CumberlandCircle\CADD_Sheets\D162B16-sht-402-ssht03-wolf.dgn 12/1/2017 5:17:56 PM

HBM ENGINEERING GROUP, LLC

USER NAME = ahmad.issa	DESIGNED - MAA	REVISED - 12/01/2017	
	DRAWN - MAA	REVISED -	
PLOT SCALE = 20.0000 ' / in.	CHECKED - JMG	REVISED -	
PLOT DATE = 12/1/2017	DATE - 10/17/2017	REVISED -	

STATE OF ILLINOIS
DEPARTMENT OF TRANSPORTATION

CROSS SECTIONS - WOLF RD

SCALE: $SCALE$ | SHEET 3 OF 17 SHEETS | STA. TO STA.

F.A.P. RTE.	SECTION	COUNTY	TOTAL SHEETS	SHEET NO.
339	583-R	COOK	186	172
		CONTRACT NO. 62B16		
		ILLINOIS		

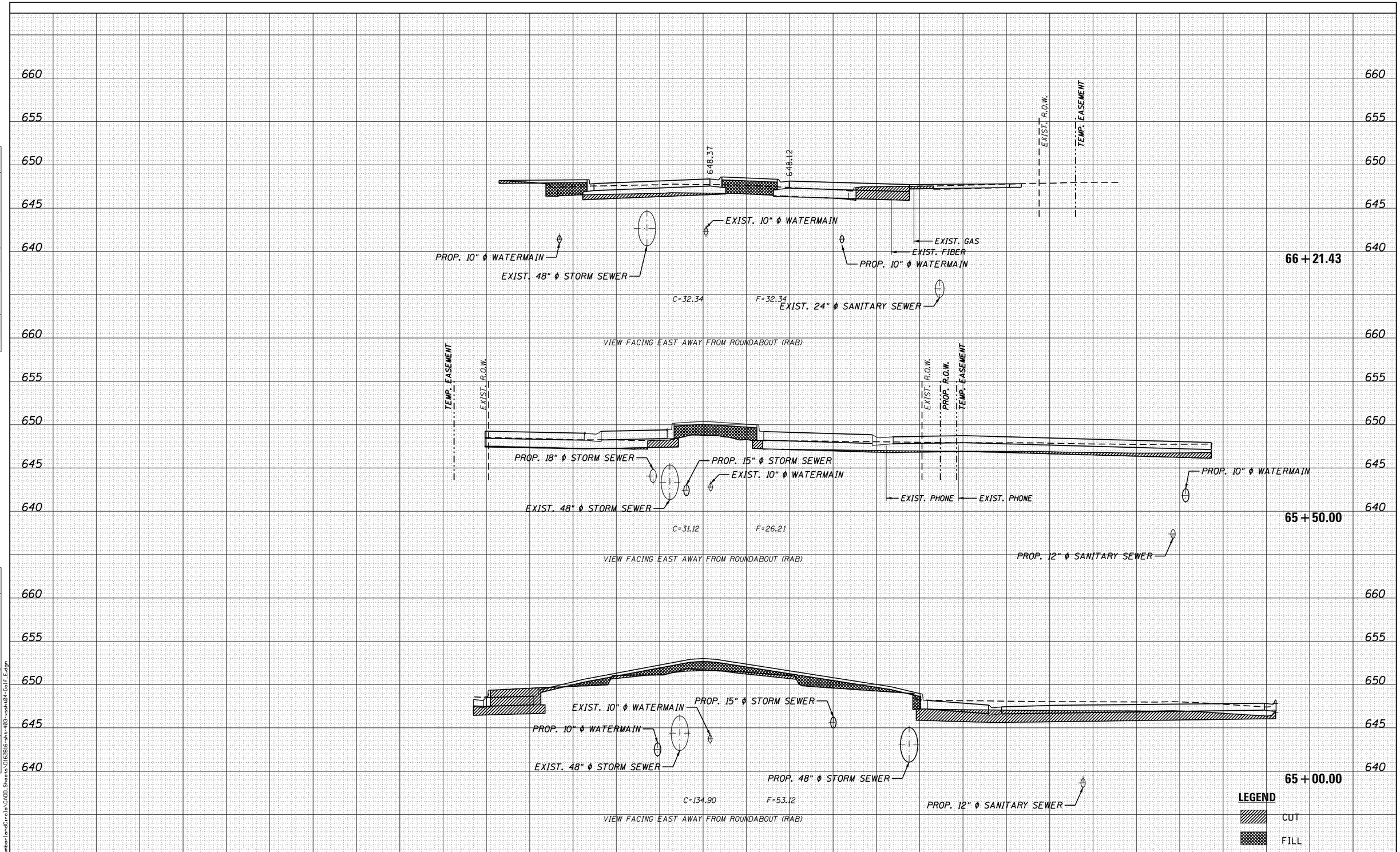

FINAL SURVEY		BY	DATE
NOTE BOOK	SURVEYED		
	PLOTTED		
	TEMPLATE		
	AREAS		
NO.	AREAS CHECKED		

ORIGINAL SURVEY		BY	DATE
NOTE BOOK	SURVEYED		
	PLOTTED		
	TEMPLATE		
	AREAS		
NO.	AREAS CHECKED		

12/1/2017 3:50:33 PM P:\1501-630 W07 CumberlandCircle\CADD_Sheets\D162B16-sht-403-sht04-Golf_E.dgn

HBM ENGINEERING GROUP, LLC

USER NAME = Kendrabant	DESIGNED - MAA	REVISED - 12/01/2017	
	DRAWN - MAA	REVISED -	
PLOT SCALE = 20.0000 ' / in.	CHECKED - JMG	REVISED -	
PLOT DATE = 12/1/2017	DATE - 10/17/2017	REVISED -	

STATE OF ILLINOIS
DEPARTMENT OF TRANSPORTATION

CROSS SECTIONS - GOLF RD EAST

SCALE: $SCALE$ | SHEET 4 OF 17 SHEETS | STA. TO STA.

F.A.P. RTE.	SECTION	COUNTY	TOTAL SHEETS	SHEET NO.
339	583-R	COOK	186	173

CONTRACT NO. 62B16

ILLINOIS

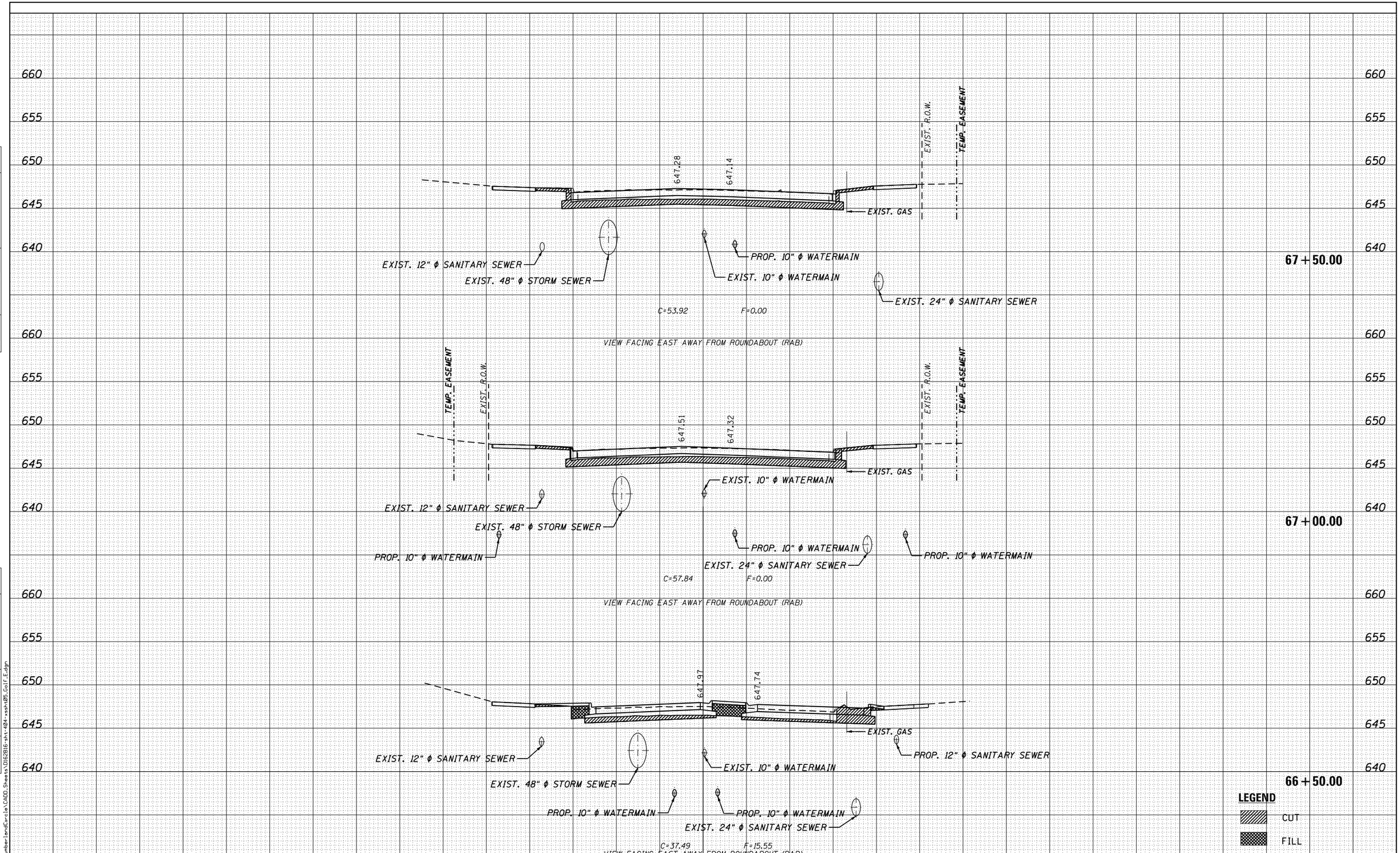

FINAL SURVEY	BY	DATE
SURVEYED		
PLOTTED		
TEMPLATE		
AREAS		
AREAS CHECKED		
NOTE BOOK		
NO.		

ORIGINAL SURVEY	BY	DATE
SURVEYED		
PLOTTED		
TEMPLATE		
AREAS		
AREAS CHECKED		
NOTE BOOK		
NO.		

P:\1501-630 W07 CumberlandCircle\CADD\Sheets\D162B16-sht-404-xsesh05_Golf_E.dgn 12/1/2017 3:50:34 PM

HBM
ENGINEERING GROUP, LLC

USER NAME = Kendrabant	DESIGNED - MAA	REVISED - 12/01/2017	
	DRAWN - MAA	REVISED -	
PLOT SCALE = 20.0000 ' / in.	CHECKED - JMG	REVISED -	
PLOT DATE = 12/1/2017	DATE - 10/17/2017	REVISED -	

STATE OF ILLINOIS
DEPARTMENT OF TRANSPORTATION

CROSS SECTIONS - GOLF RD EAST

SCALE: $SCALE$ | SHEET 5 OF 17 SHEETS | STA. TO STA.

F.A.P. RTE.	SECTION	COUNTY	TOTAL SHEETS	SHEET NO.
339	583-R	COOK	186	174

CONTRACT NO. 62B16

ILLINOIS

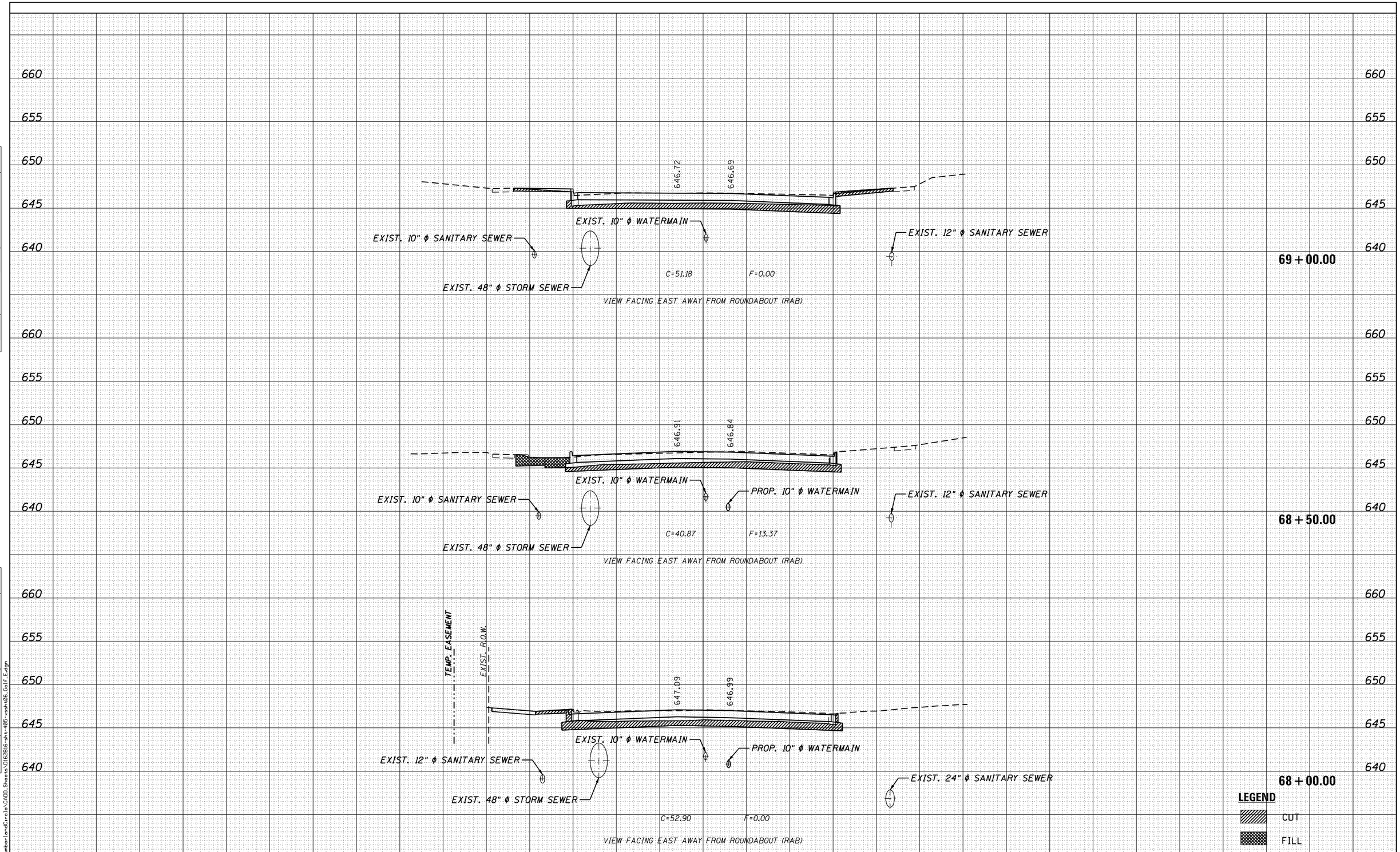

FINAL SURVEY		BY	DATE
NOTE BOOK	SURVEYED		
	PLOTTED		
	TEMPLATE		
	AREAS		
NO.	AREAS CHECKED		

ORIGINAL SURVEY		BY	DATE
NOTE BOOK	SURVEYED		
	PLOTTED		
	TEMPLATE		
	AREAS		
NO.	AREAS CHECKED		

12/1/2017 3:58:35 PM P:\1501-630 W07 CumberlandCircle\CADD_Sheets\D162B16-sht-405-xsh-106_Golf_E.dgn

HBM ENGINEERING GROUP, LLC

USER NAME = Kendrabant	DESIGNED - MAA	REVISED - 12/01/2017
	DRAWN - MAA	REVISED -
PLOT SCALE = 20.0000 ' / in.	CHECKED - JMG	REVISED -
PLOT DATE = 12/1/2017	DATE - 10/17/2017	REVISED -

STATE OF ILLINOIS
DEPARTMENT OF TRANSPORTATION

CROSS SECTIONS - GOLF RD EAST

SCALE: $SCALE$ | SHEET 6 OF 17 SHEETS | STA. TO STA.

F.A.P. RTE.	SECTION	COUNTY	TOTAL SHEETS	SHEET NO.
339	583-R	COOK	186	175

CONTRACT NO. 62B16

ILLINOIS

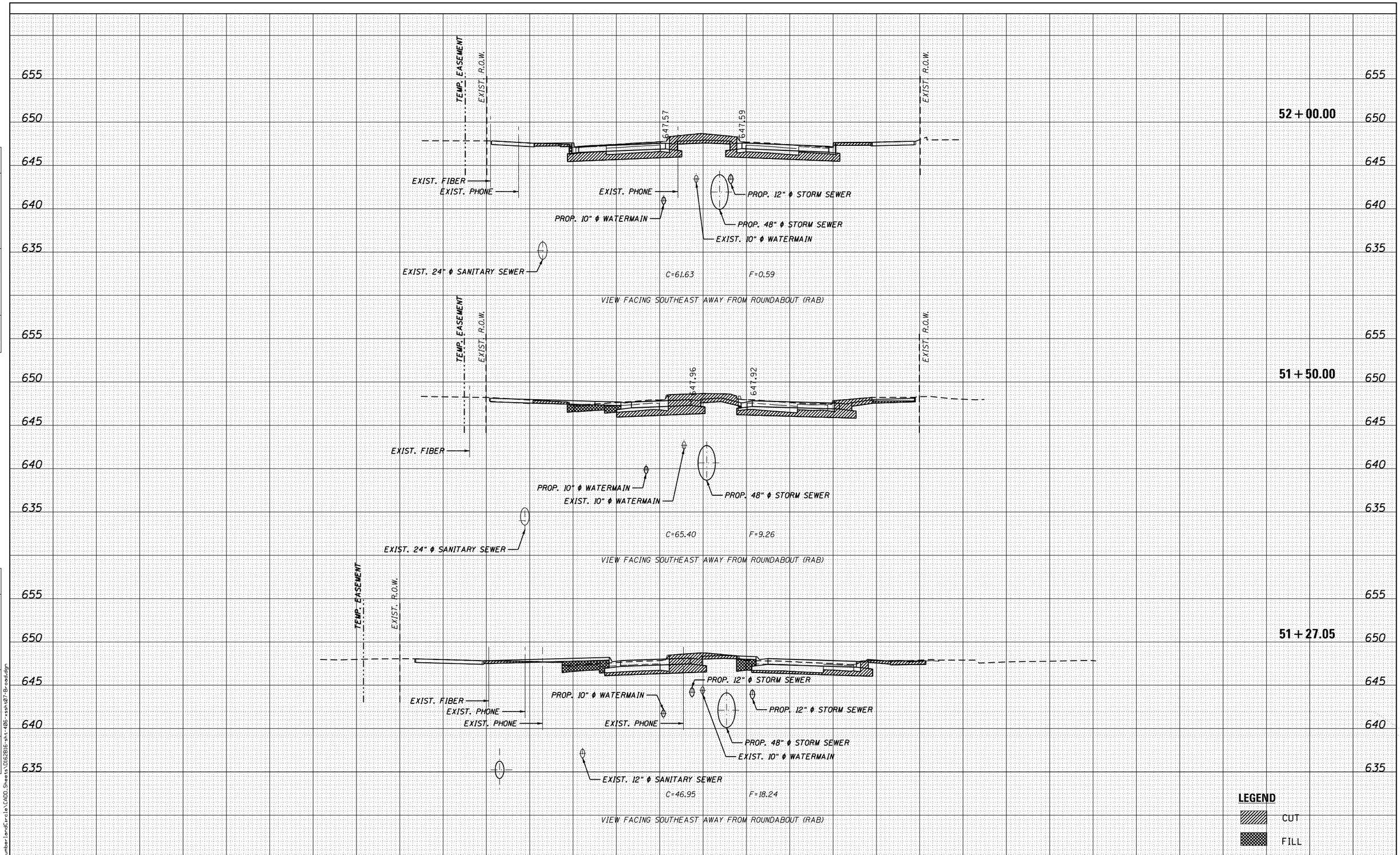

FINAL SURVEY		BY	DATE
NOTE BOOK	SURVEYED		
	PLOTTED		
	TEMPLATE		
	AREAS		
NO.	AREAS CHECKED		

ORIGINAL SURVEY		BY	DATE
NOTE BOOK	SURVEYED		
	PLOTTED		
	TEMPLATE		
	AREAS		
NO.	AREAS CHECKED		

P:\1501-630 W07 CumberlandCircle\CADD_Sheets\D162B16-sht-406-ssh07-Broad.dgn 12/1/2017 3:50:36 PM

HBM ENGINEERING GROUP, LLC

USER NAME = Ken.drabant	DESIGNED - MAA	REVISED - 12/01/2017	
	DRAWN - MAA	REVISED -	
PLOT SCALE = 20.0000 ' / in.	CHECKED - JMG	REVISED -	
PLOT DATE = 12/1/2017	DATE - 10/17/2017	REVISED -	

STATE OF ILLINOIS
DEPARTMENT OF TRANSPORTATION

CROSS SECTIONS – BROADWAY ST

SCALE: $SCALE$ | SHEET 7 OF 17 SHEETS | STA. TO STA.

F.A.P. RTE.	SECTION	COUNTY	TOTAL SHEETS	SHEET NO.
339	583-R	COOK	186	176

CONTRACT NO. 62B16

ILLINOIS

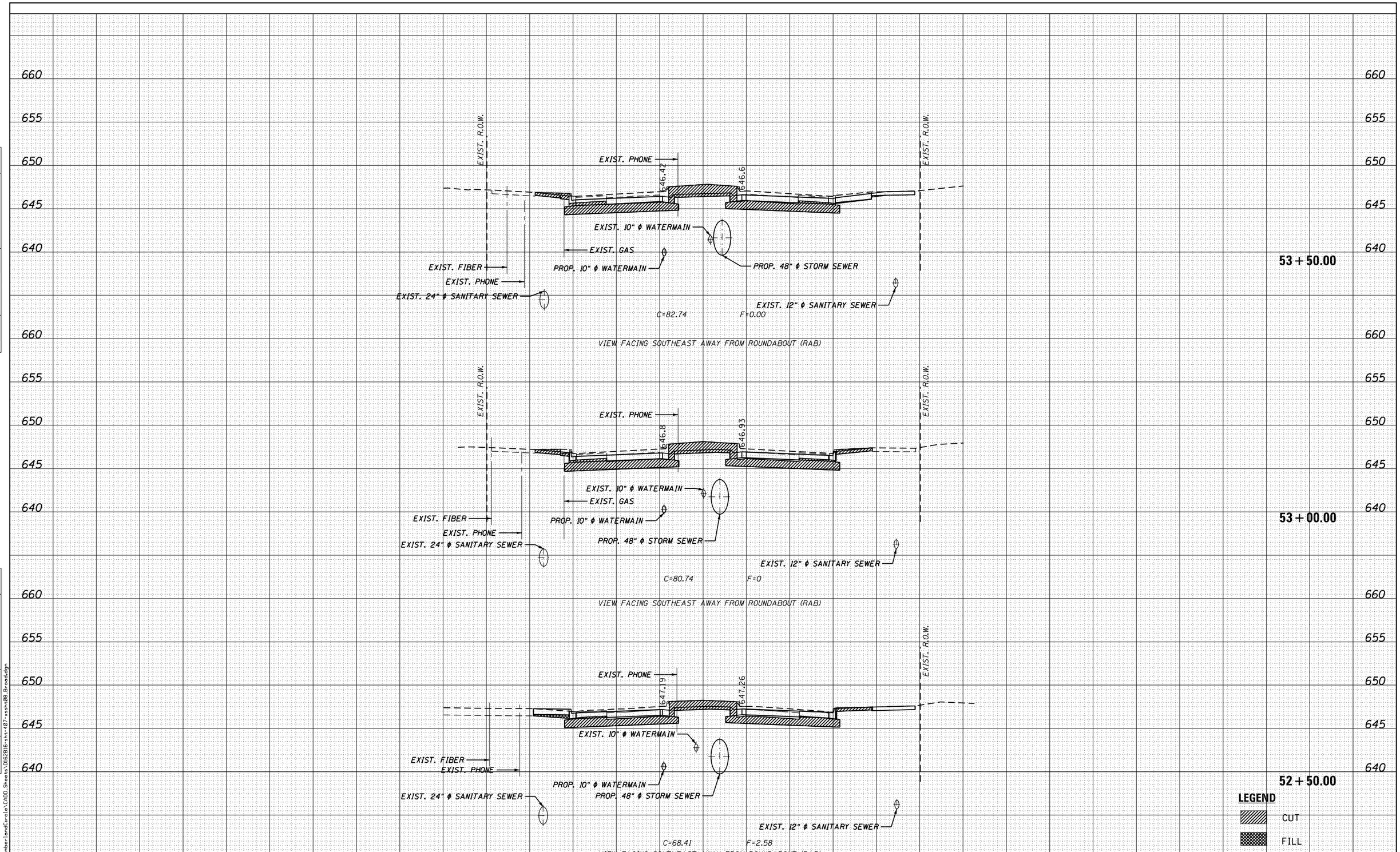

FINAL SURVEY		BY	DATE
NOTE BOOK	SURVEYED		
	PLOTTED		
	TEMPLATE		
	AREAS		
NO.	AREAS CHECKED		

ORIGINAL SURVEY		BY	DATE
NOTE BOOK	SURVEYED		
	PLOTTED		
	TEMPLATE		
	AREAS		
NO.	AREAS CHECKED		

P:\1501-630 W07 CumberlandCircle\CADD_Sheets\D162B16-sht-407-xsht08_Broad.dgn 12/1/2017 3:50:37 PM

HBM ENGINEERING GROUP, LLC

USER NAME = Kendrabant	DESIGNED - MAA	REVISED - 12/01/2017	
	DRAWN - MAA	REVISED -	
PLOT SCALE = 20.0000 ' / in.	CHECKED - JMG	REVISED -	
PLOT DATE = 12/1/2017	DATE - 10/17/2017	REVISED -	

STATE OF ILLINOIS
DEPARTMENT OF TRANSPORTATION

CROSS SECTIONS – BROADWAY ST

SCALE: $SCALE$ | SHEET 8 OF 17 SHEETS | STA. TO STA.

F.A.P. RTE.	SECTION	COUNTY	TOTAL SHEETS	SHEET NO.
339	583-R	COOK	186	177
		CONTRACT NO. 62B16		
		ILLINOIS		

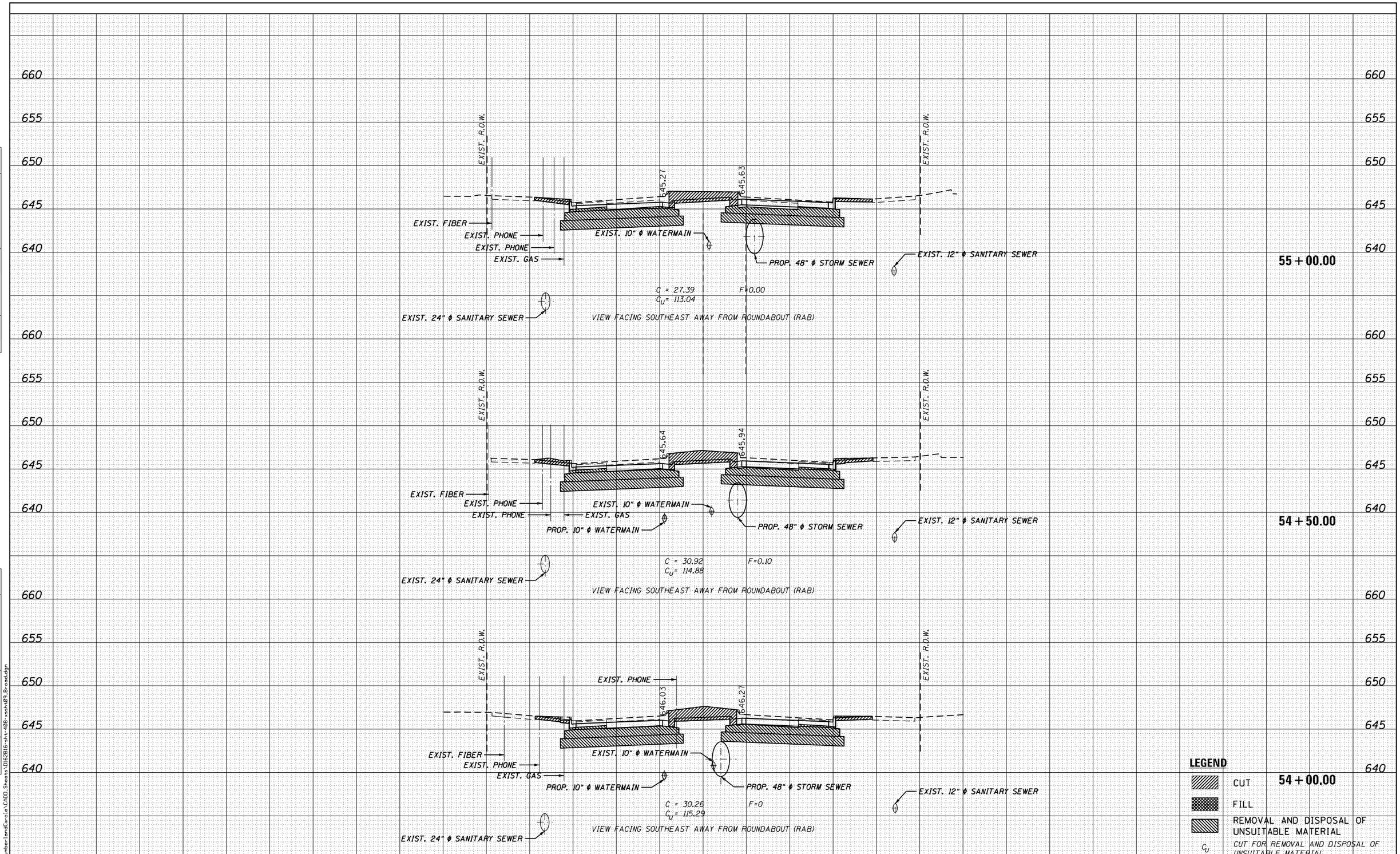

FINAL SURVEY		BY	DATE
	SURVEYED		
	PLOTTED		
	TEMPLATE		
NOTE BOOK	AREAS		
	AREAS CHECKED		
NO.			

ORIGINAL SURVEY		BY	DATE
	SURVEYED		
	PLOTTED		
	TEMPLATE		
NOTE BOOK	AREAS		
	AREAS CHECKED		
NO.			

P:\1501-630 W07 Cumberland Circle\CADD\Sheets\D162B16-sht-408-xsah09_Broad.dgn 12/1/2017 3:50:38 PM

HBM ENGINEERING GROUP, LLC

USER NAME = Kendrabant	DESIGNED - MAA	REVISED - 12/01/2017	
	DRAWN - MAA	REVISED -	
PLOT SCALE = 20.0000 ' / in.	CHECKED - JMG	REVISED -	
PLOT DATE = 12/1/2017	DATE - 10/17/2017	REVISED -	

STATE OF ILLINOIS
DEPARTMENT OF TRANSPORTATION

CROSS SECTIONS – BROADWAY ST

SCALE: $SCALE$ | SHEET 9 OF 17 SHEETS | STA. TO STA.

F.A.P. RTE.	SECTION	COUNTY	TOTAL SHEETS	SHEET NO.
339	583-R	COOK	186	178

CONTRACT NO. 62B16

ILLINOIS

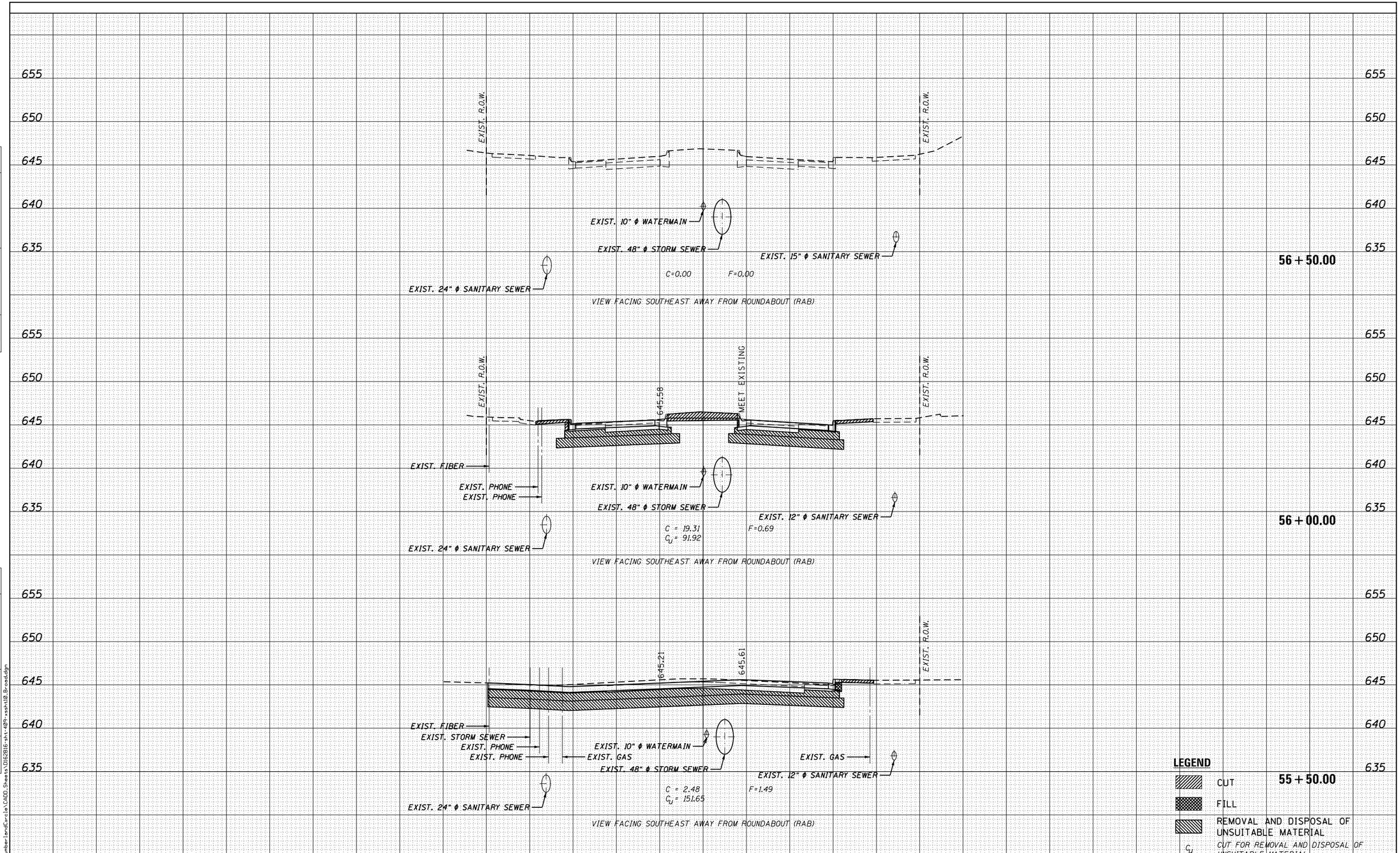

FINAL SURVEY	BY	DATE
SURVEYED		
PLOTTED		
TEMPLATE		
AREAS		
AREAS CHECKED		
NOTE BOOK NO.		

ORIGINAL SURVEY	BY	DATE
SURVEYED		
PLOTTED		
TEMPLATE		
AREAS		
AREAS CHECKED		
NOTE BOOK NO.		

P:\1501-630 W07 CumberlandCircle\CADD_Sheets\D162B16-sht-409-xsht10_Broad.dgn 12/1/2017 5:17:57 PM

HBM ENGINEERING GROUP, LLC

USER NAME = ahmad.issa	DESIGNED - MAA	REVISED - 12/01/2017	
	DRAWN - MAA	REVISED -	
PLOT SCALE = 20.0000 ' / in.	CHECKED - JMG	REVISED -	
PLOT DATE = 12/1/2017	DATE - 10/17/2017	REVISED -	

STATE OF ILLINOIS
DEPARTMENT OF TRANSPORTATION

CROSS SECTIONS – BROADWAY ST

SCALE: $SCALE$ | SHEET 10 OF 17 SHEETS | STA. TO STA.

F.A.P. RTE.	SECTION	COUNTY	TOTAL SHEETS	SHEET NO.
339	583-R	COOK	186	179
		CONTRACT NO. 62B16		
		ILLINOIS		

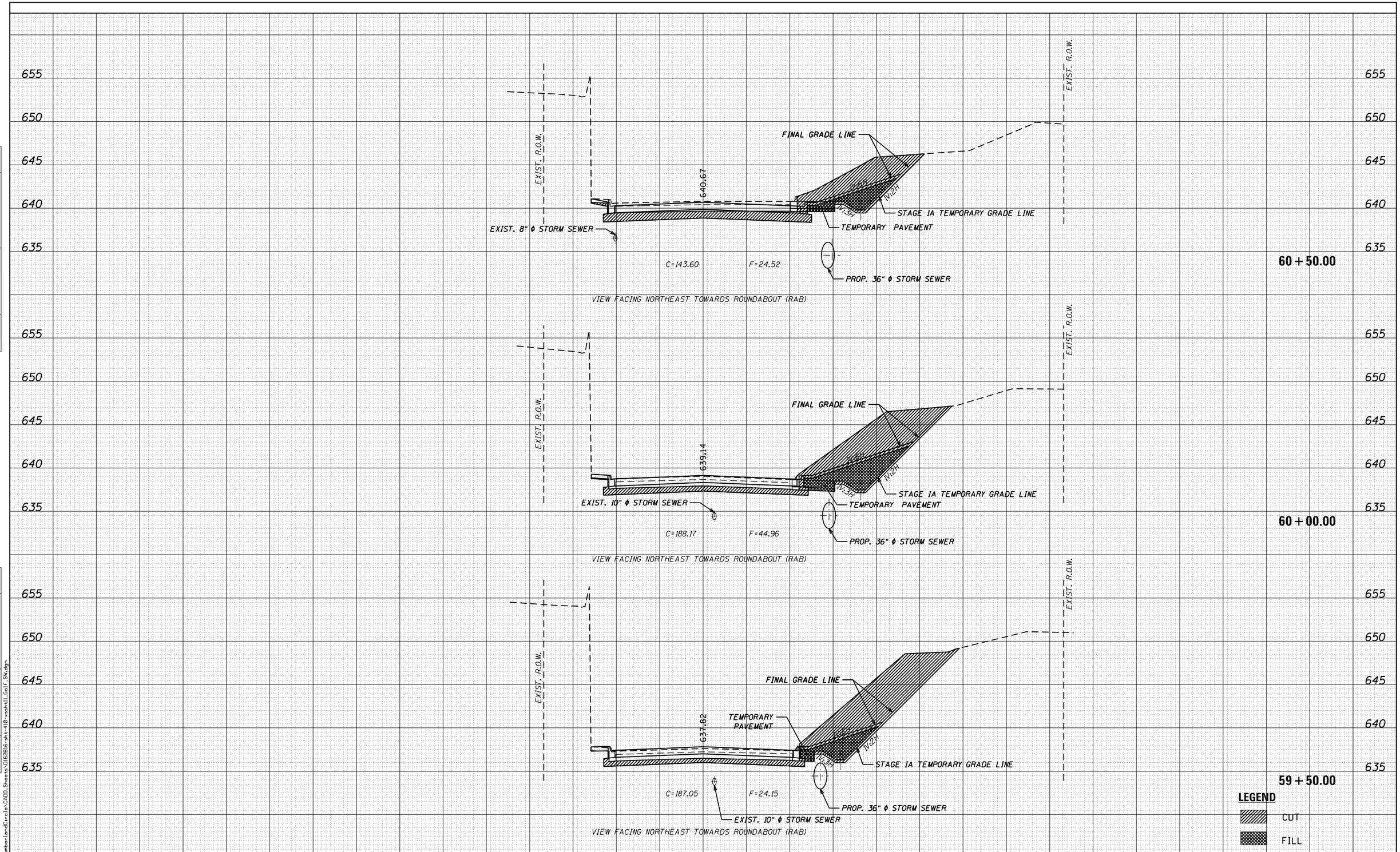

FINAL SURVEY		BY	DATE
NOTE BOOK	SURVEYED		
	PLOTTED		
	TEMPLATE		
	AREAS		
NO.	AREAS CHECKED		

ORIGINAL SURVEY		BY	DATE
NOTE BOOK	SURVEYED		
	PLOTTED		
	TEMPLATE		
	AREAS		
NO.	AREAS CHECKED		

P:\1501-630 W07 Cumberland Circle\CADD_Sheets\D162B16-sht-410-sshtll_Golf_SW.dgn 12/1/2017 3:50:40 PM

HBM
ENGINEERING GROUP, LLC

USER NAME = Ken.drabant	DESIGNED - MAA	REVISED - 12/01/2017	
	DRAWN - MAA	REVISED -	
PLOT SCALE = 20.0000 ' / in.	CHECKED - JMG	REVISED -	
PLOT DATE = 12/1/2017	DATE - 10/17/2017	REVISED -	

STATE OF ILLINOIS
DEPARTMENT OF TRANSPORTATION

CROSS SECTIONS – GOLF RD SW

SCALE: $SCALE$ | SHEET 11 OF 17 SHEETS | STA. TO STA.

F.A.P. RTE.	SECTION	COUNTY	TOTAL SHEETS	SHEET NO.
339	583-R	COOK	186	180

CONTRACT NO. 62B16

ILLINOIS

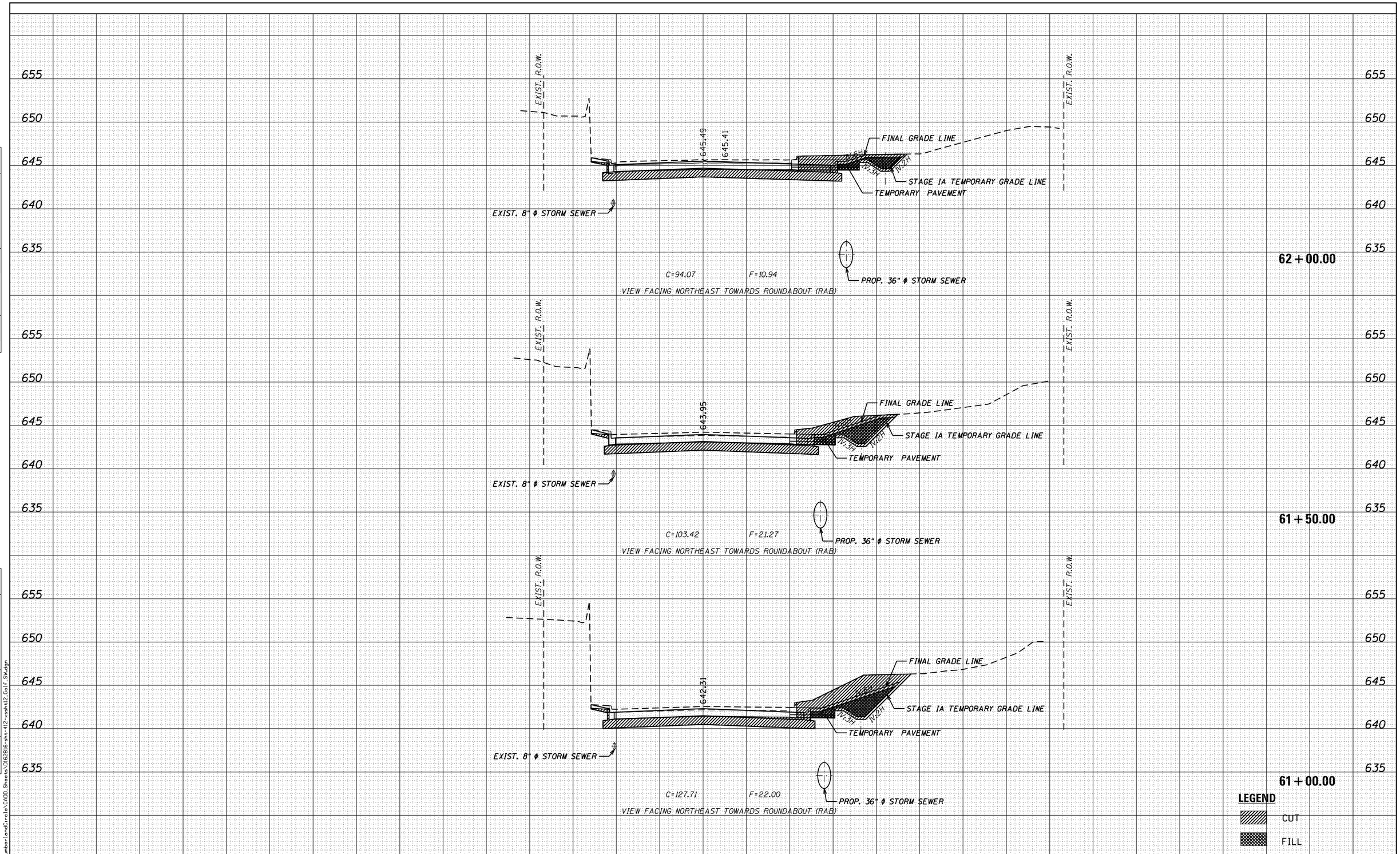

FINAL SURVEY	BY	DATE
SURVEYED		
PLOTTED		
TEMPLATE		
AREAS		
AREAS CHECKED		
NOTE BOOK		
NO.		

ORIGINAL SURVEY	BY	DATE
SURVEYED		
PLOTTED		
TEMPLATE		
AREAS		
AREAS CHECKED		
NOTE BOOK		
NO.		

12/1/2017 3:58:41 PM P:\1501-630 W07 CumberlandCircle\CADD_Sheets\D162B16-sht-412-xsght12_Golf_SW.dgn

HBM ENGINEERING GROUP, LLC

USER NAME = Kendrabant	DESIGNED - MAA	REVISED - 12/01/2017
	DRAWN - MAA	REVISED -
PLOT SCALE = 20.0000 ' / in.	CHECKED - JMG	REVISED -
PLOT DATE = 12/1/2017	DATE - 10/17/2017	REVISED -

STATE OF ILLINOIS
DEPARTMENT OF TRANSPORTATION

CROSS SECTIONS – GOLF RD SW

SCALE: $SCALE$ | SHEET 12 OF 17 SHEETS | STA. TO STA.

F.A.P. RTE.	SECTION	COUNTY	TOTAL SHEETS	SHEET NO.
339	583-R	COOK	186	181
		CONTRACT NO. 62B16		
	ILLINOIS			

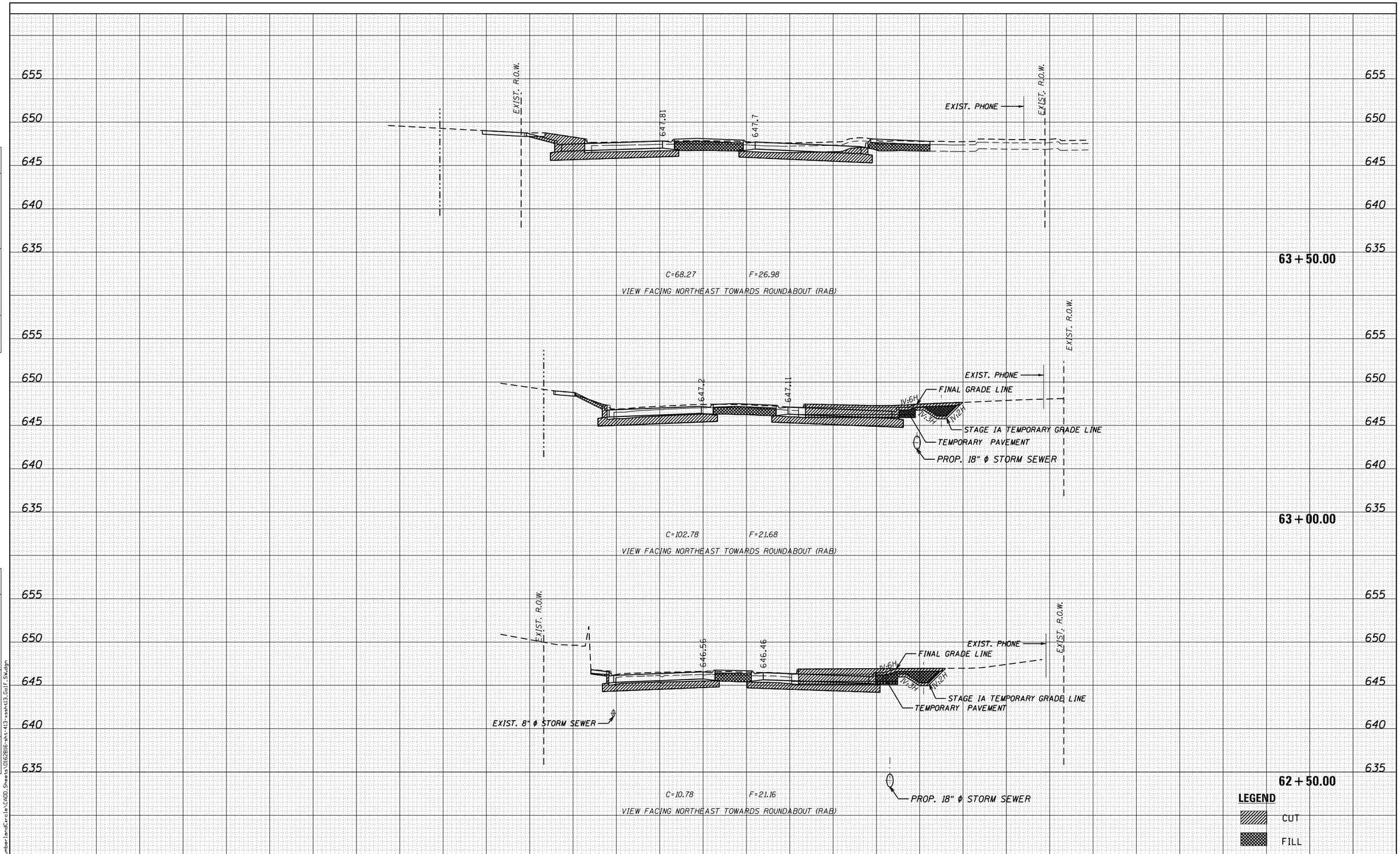

FINAL SURVEY	BY	DATE
SURVEYED		
PLOTTED		
TEMPLATE		
AREAS		
AREAS CHECKED		
NOTE BOOK		
NO.		

ORIGINAL SURVEY	BY	DATE
SURVEYED		
PLOTTED		
TEMPLATE		
AREAS		
AREAS CHECKED		
NOTE BOOK		
NO.		

P:\1501-630 W07 CumberlandCircle\CADD_Sheets\D162B16-sht-413-xsght13_Golf_SW.dgn 12/1/2017 3:58:42 PM

HBM
ENGINEERING GROUP, LLC

USER NAME = Kendrabant	DESIGNED - MAA	REVISED - 12/01/2017
	DRAWN - MAA	REVISED -
PLOT SCALE = 20.0000 ' / in.	CHECKED - JMG	REVISED -
PLOT DATE = 12/1/2017	DATE - 10/17/2017	REVISED -

STATE OF ILLINOIS
DEPARTMENT OF TRANSPORTATION

CROSS SECTIONS – GOLF RD SW

SCALE: $SCALE$ | SHEET 13 OF 17 SHEETS | STA. TO STA.

F.A.P. RTE.	SECTION	COUNTY	TOTAL SHEETS	SHEET NO.
339	583-R	COOK	186	182
		CONTRACT NO. 62B16		
	ILLINOIS			

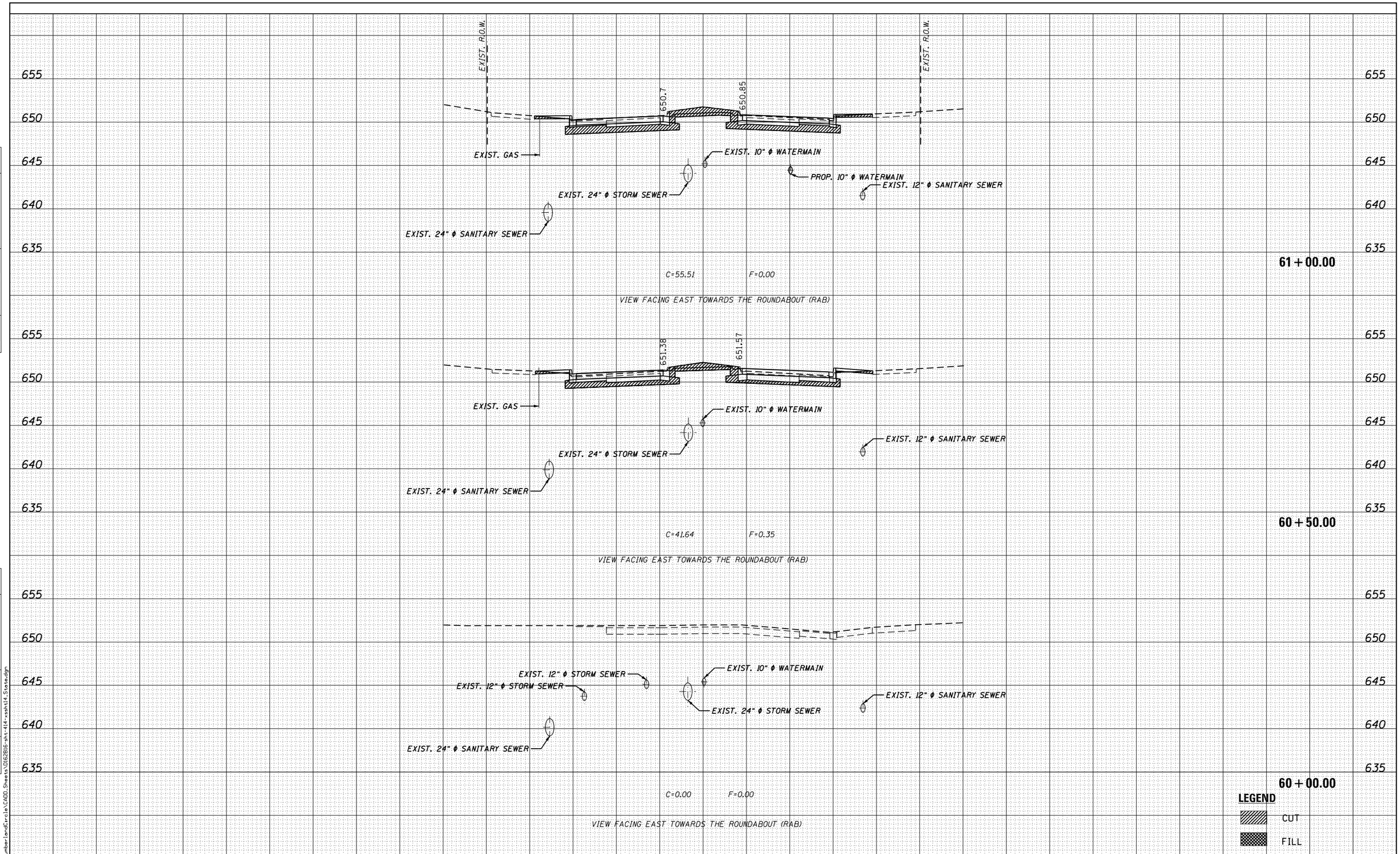

FINAL SURVEY		BY	DATE
NOTE BOOK	SURVEYED		
	PLOTTED		
	TEMPLATE		
	AREAS		
	AREAS CHECKED		
NO.			

ORIGINAL SURVEY		BY	DATE
NOTE BOOK	SURVEYED		
	PLOTTED		
	TEMPLATE		
	AREAS		
	AREAS CHECKED		
NO.			

12/1/2017 3:58:43 PM P:\1501-630 W07 CumberlandCircle\CADD_Sheets\D162B16-sht-414-xsht14_State.dgn

HBM ENGINEERING GROUP, LLC

USER NAME = Kendrabant	DESIGNED - MAA	REVISED - 12/01/2017	
	DRAWN - MAA	REVISED -	
PLOT SCALE = 20.0000 ' / in.	CHECKED - JMG	REVISED -	
PLOT DATE = 12/1/2017	DATE - 10/17/2017	REVISED -	

STATE OF ILLINOIS
DEPARTMENT OF TRANSPORTATION

CROSS SECTIONS - STATE ST

SCALE: $SCALE$ | SHEET 14 OF 17 SHEETS | STA. TO STA.

F.A.P. RTE.	SECTION	COUNTY	TOTAL SHEETS	SHEET NO.
339	583-R	COOK	186	183
		CONTRACT NO. 62B16		
	ILLINOIS			

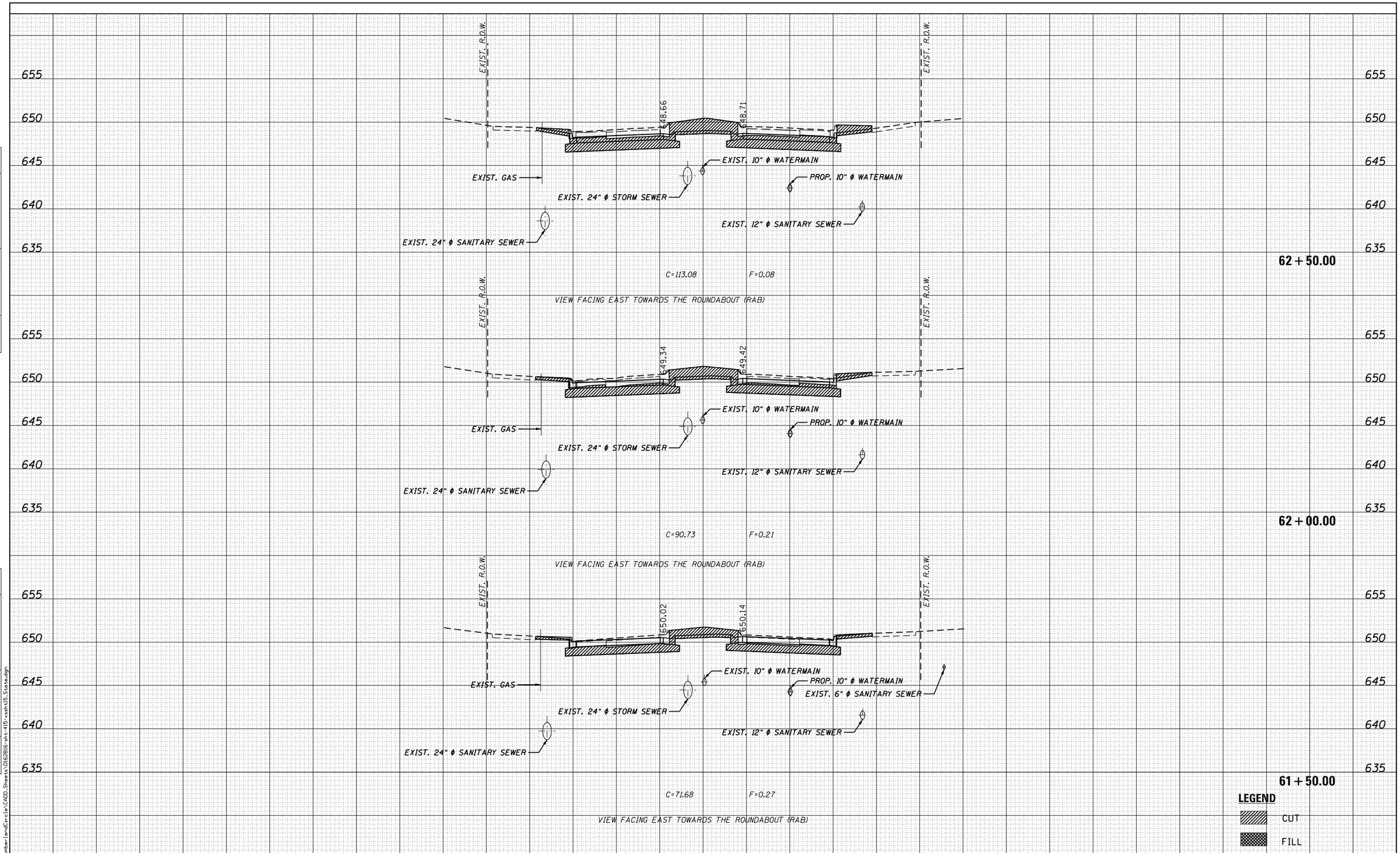

FINAL SURVEY	BY	DATE
SURVEYED		
PLOTTED		
TEMPLATE		
AREAS		
AREAS CHECKED		
NOTE BOOK		
NO.		

ORIGINAL SURVEY	BY	DATE
SURVEYED		
PLOTTED		
TEMPLATE		
AREAS		
AREAS CHECKED		
NOTE BOOK		
NO.		

12/1/2017 3:58:44 PM P:\1501-630 W07 CumberlandCircle\CADD_Sheets\D162B16-sht-415-xsesh15_Statedgn

HBM ENGINEERING GROUP, LLC

USER NAME = Kendrabant	DESIGNED - MAA	REVISED - 12/01/2017	
	DRAWN - MAA	REVISED -	
PLOT SCALE = 20.0000 ' / in.	CHECKED - JMG	REVISED -	
PLOT DATE = 12/1/2017	DATE - 10/17/2017	REVISED -	

STATE OF ILLINOIS
DEPARTMENT OF TRANSPORTATION

CROSS SECTIONS - STATE ST

SCALE: $SCALE$ | SHEET 15 OF 17 SHEETS | STA. TO STA.

F.A.P. RTE.	SECTION	COUNTY	TOTAL SHEETS	SHEET NO.
339	583-R	COOK	186	184

CONTRACT NO. 62B16

ILLINOIS

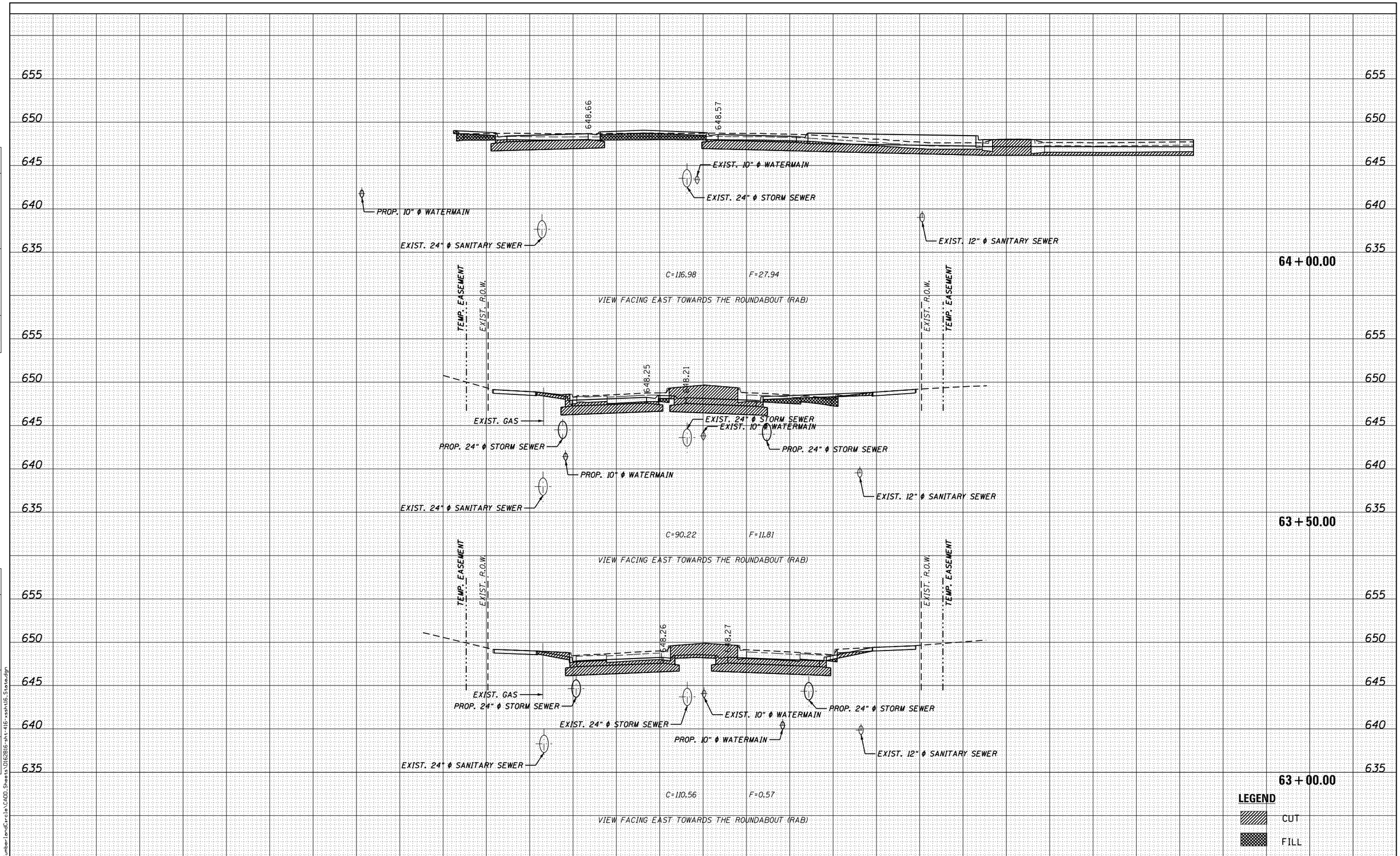

FINAL SURVEY	BY	DATE
SURVEYED		
PLOTTED		
TEMPLATE		
AREAS		
AREAS CHECKED		
NOTE BOOK NO.		

ORIGINAL SURVEY	BY	DATE
SURVEYED		
PLOTTED		
TEMPLATE		
AREAS		
AREAS CHECKED		
NOTE BOOK NO.		

12/1/2017 3:58:45 PM P:\1501-630 W07 Cumberland Circle\CADD_Sheets\D162B16-sht-416-xsht16_State.dgn

HBM ENGINEERING GROUP, LLC

USER NAME = Kendrabant	DESIGNED - MAA	REVISED - 12/01/2017	
	DRAWN - MAA	REVISED -	
PLOT SCALE = 20.0000 ' / in.	CHECKED - JMG	REVISED -	
PLOT DATE = 12/1/2017	DATE - 10/17/2017	REVISED -	

STATE OF ILLINOIS
DEPARTMENT OF TRANSPORTATION

CROSS SECTIONS - STATE ST

SCALE: $SCALE$ | SHEET 16 OF 17 SHEETS | STA. TO STA.

F.A.P. RTE.	SECTION	COUNTY	TOTAL SHEETS	SHEET NO.
339	583-R	COOK	186	185
		CONTRACT NO. 62B16		
		ILLINOIS		

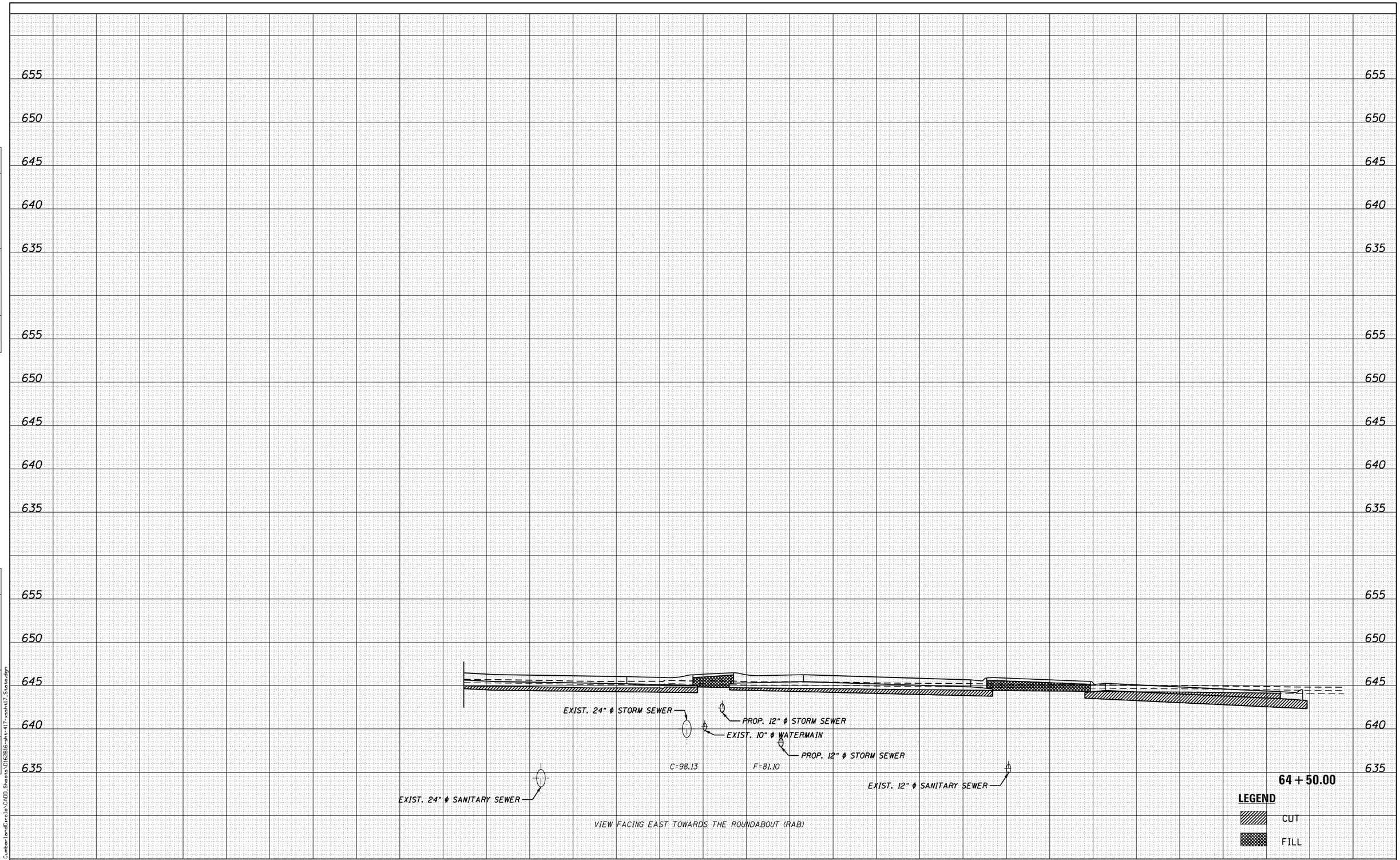

FINAL SURVEY	BY	DATE
SURVEYED		
PLOTTED		
TEMPLATE		
AREAS		
AREAS CHECKED		
NOTE BOOK NO.		

ORIGINAL SURVEY	BY	DATE
SURVEYED		
PLOTTED		
TEMPLATE		
AREAS		
AREAS CHECKED		
NOTE BOOK NO.		

12/1/2017 3:50:46 PM P:\1501-630 W07 CumberlandCircle\CADD_Sheets\D162B16-sht-417-xssh17_Statewdgn

HBM ENGINEERING GROUP, LLC

USER NAME = Kendrabant	DESIGNED - MAA	REVISED - 12/01/2017	
	DRAWN - MAA	REVISED -	
PLOT SCALE = 20.0000 ' / in.	CHECKED - JMG	REVISED -	
PLOT DATE = 12/1/2017	DATE - 10/17/2017	REVISED -	

STATE OF ILLINOIS
DEPARTMENT OF TRANSPORTATION

CROSS SECTIONS - STATE ST

SCALE: $SCALE$ | SHEET 17 OF 17 SHEETS | STA. TO STA.

F.A.P. RTE.	SECTION	COUNTY	TOTAL SHEETS	SHEET NO.
339	583-R	COOK	186	186
		CONTRACT NO. 62B16		
		ILLINOIS		