F.A.I. RTE.	SECTION	COUNTY	TOTAL SHEETS	SHEET NO.
94/90	2003-031I	COOK	976	865
STA.		TO STA.		
FED. ROAD DIST. NO. _	ILLINOIS	FED. AID PROJECT		

62583

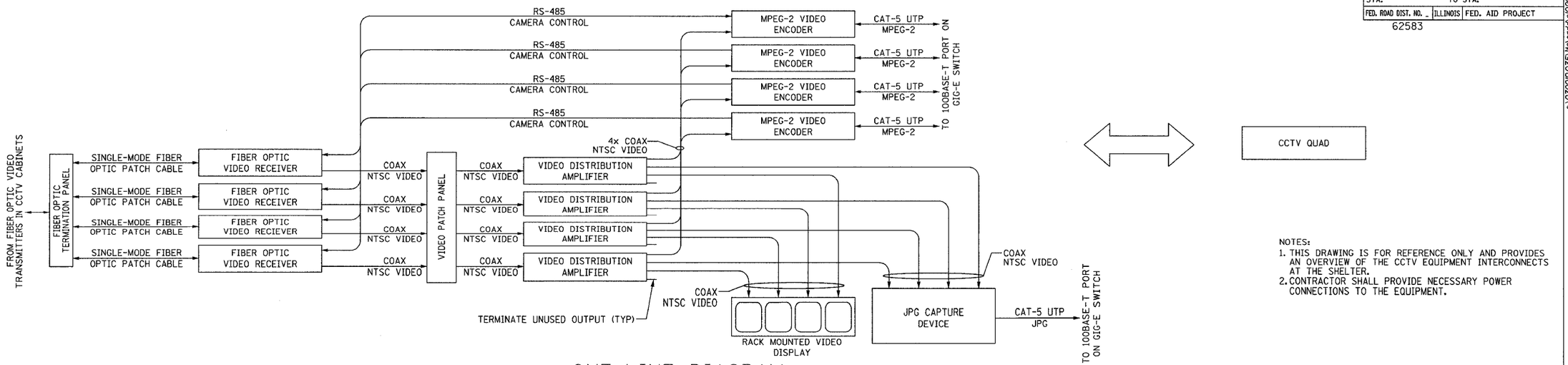

ONE-LINE DIAGRAM

NOT TO SCALE

NOTES:
1. THIS DRAWING IS FOR REFERENCE ONLY AND PROVIDES AN OVERVIEW OF THE CCTV EQUIPMENT INTERCONNECTS AT THE SHELTER.
2. CONTRACTOR SHALL PROVIDE NECESSARY POWER CONNECTIONS TO THE EQUIPMENT.

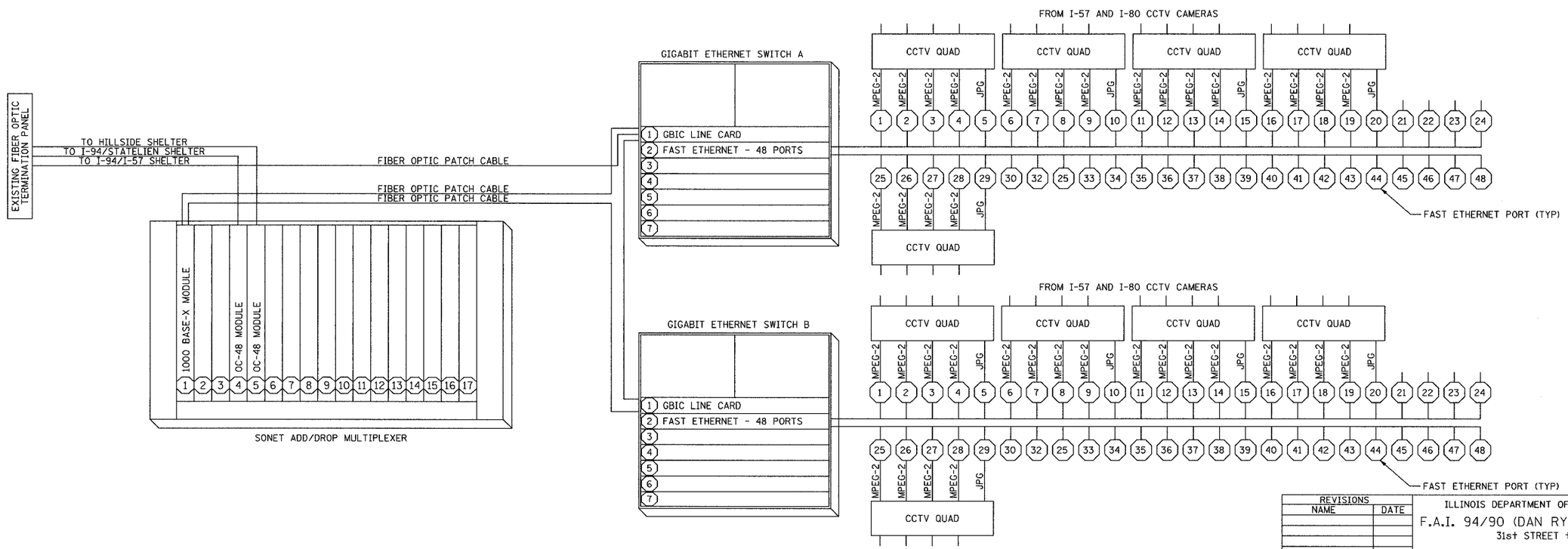

EQUIPMENT INTERCONNECT DIAGRAM

NOT TO SCALE

COMM-99

Edwards AND Kelcey
ONE NORTH FRANKLIN
CHICAGO, IL 60606
PHONE: (312) 251-3000
FAX: (312) 251-3015
WEB: WWW.EKCORP.COM

REVISIONS	
NAME	DATE

ILLINOIS DEPARTMENT OF TRANSPORTATION

F.A.I. 94/90 (DAN RYAN EXPRESSWAY)

31st STREET to I-57

I-294/I-57 SHELTER WIRING DIAGRAM

SCALE: NOT TO SCALE — DRAWN BY: DHI

DATE: October 29, 2004 — CHECKED BY: JEZ

P:\03009035\Vs\cadd\0020382es.dgn 11/23/2004 07:29:29 AM