(5)

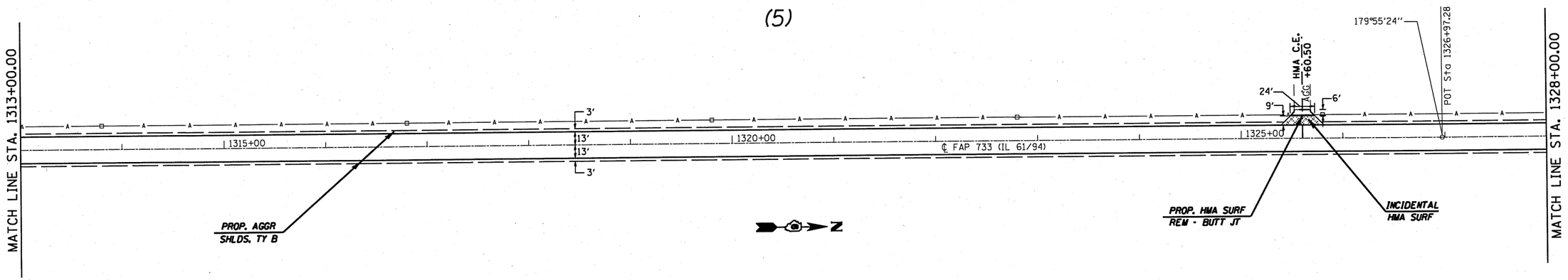

(5)

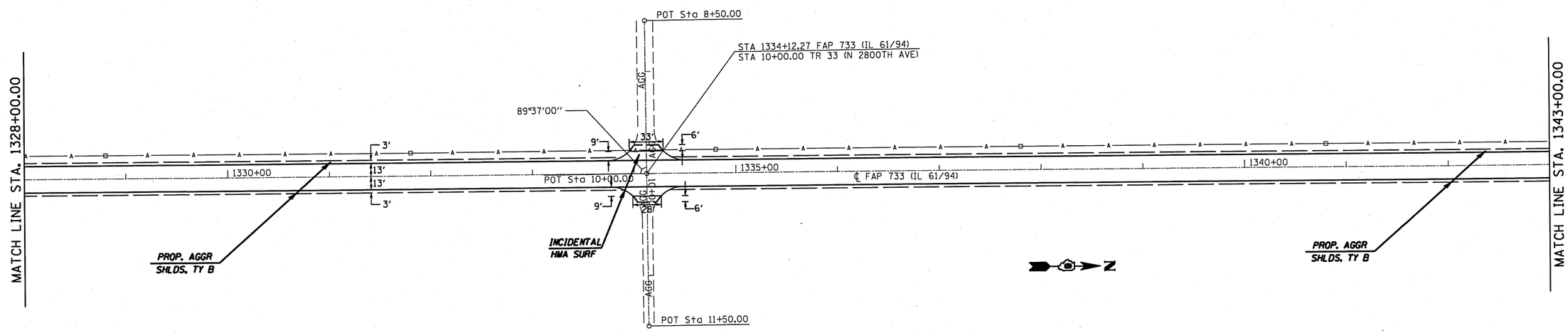

FILE NAME = c:\pw_work\pwidot\coxjw\d0215198\d672880-sht-plan50.dgn	USER NAME = coxjw	DESIGNED -	REVISED -	STATE OF ILLINOIS DEPARTMENT OF TRANSPORTATION	PLAN VIEW	F.A.P. RTE. 733	SECTION 1RS-3, 7RS-5	COUNTY •	TOTAL SHEETS 48	SHEET NO. 19
		DRAWN - JWC	REVISED -					CONTRACT NO. 72880		
	PLOT SCALE = 100.0000 ' / IN.	CHECKED - RSC	REVISED -		SCALE: 50 / SHEET NO. 4 OF 23 SHEETS / STA. 1313+00.00 TO STA. 1343+00.00			ILLINOIS FED. AID PROJECT		
	PLOT DATE = Sep-08-2010 10:42:28AM	DATE -	REVISED -					• ADAMS, HANCOCK		