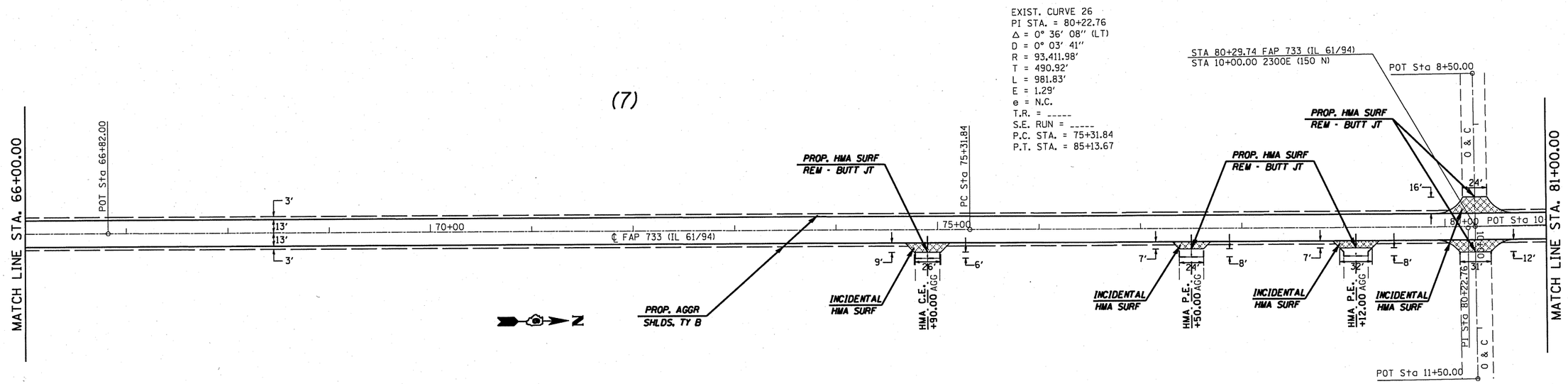

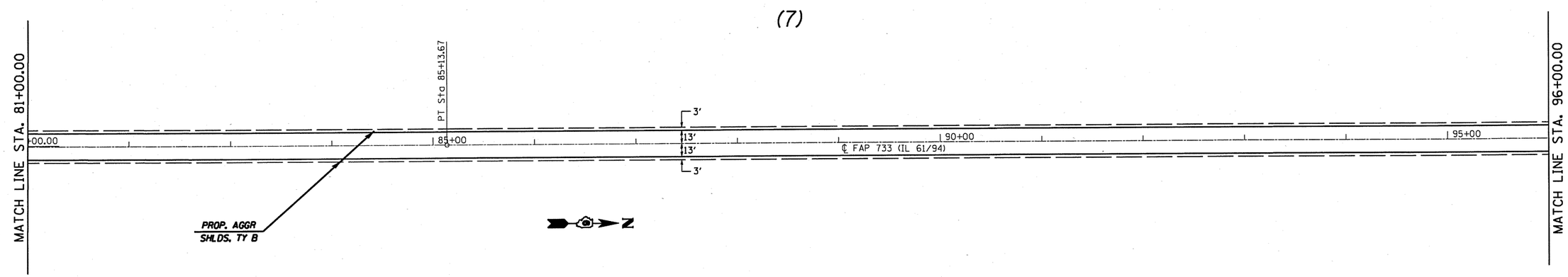

FILE NAME = c:\pw_work\pwidot\coxjw\d0215198\d672880-sht-plan50-1.dgn	USER NAME = coxjw	DESIGNED -	REVISED -
		DRAWN - JWC	REVISED -
	PLOT SCALE = 100.0000 ' / IN.	CHECKED - RSC	REVISED -
	PLOT DATE = Sep-08-2010 10:42:37AM	DATE -	REVISED -

STATE OF ILLINOIS
DEPARTMENT OF TRANSPORTATION

PLAN VIEW

SCALE: 50 | SHEET NO. 11 OF 23 SHEETS | STA. 66+00.00 TO STA. 96+00.00

F.A.P. RTE.	SECTION	COUNTY	TOTAL SHEETS	SHEET NO.
733	1RS-3, 7RS-5	*	48	26

CONTRACT NO. 72880

ILLINOIS FED. AID PROJECT

* ADAMS, HANCOCK