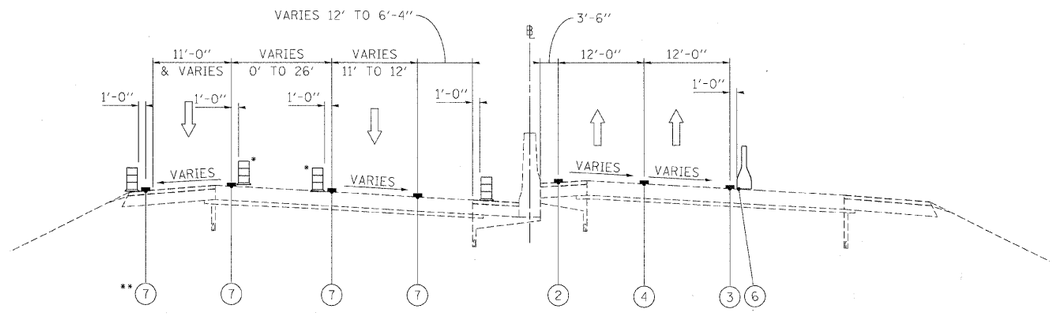

STA 338+26 TO STA 349+84 (WB)

I–290 MAINTENANCE OF TRAFFIC
TYPICAL SECTION
STAGE 2

STA 346+10 TO STA 349+13 (EB)
STA 353+73 TO STA 356+60 (EB)

**USE EXISTING PAVEMENT PARKING FROM STA 338+26 TO STA 342+94
*TEMPORARY CONCRETE BARRIER STA 346+60 TO STA 349+84

BRIDGE OMISSION
STA 349+84 TO STA 354+01
STA 377+81 TO STA 389+79

BRIDGE OMISSION
STA 348+80 TO STA 353+23
STA 378+64 TO STA 389+72

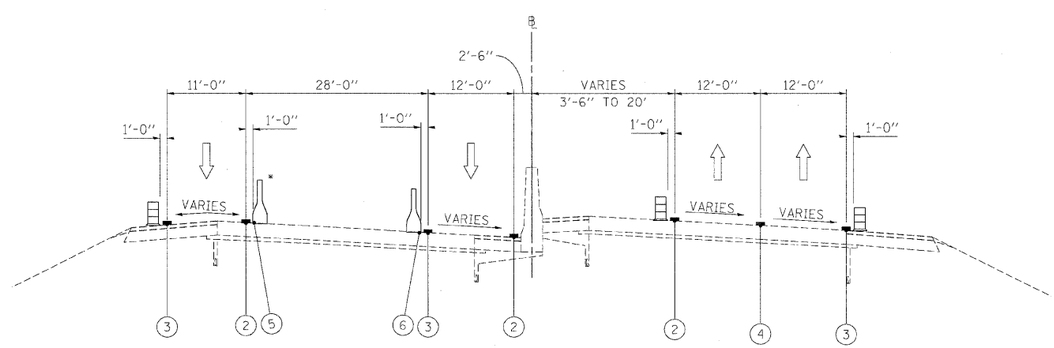

STA 354+01 TO STA 358+50 (WB)
*OMIT TEMPORARY CONCRETE BARRIER STA 357+00 TO STA 360+00

I–290 MAINTENANCE OF TRAFFIC
TYPICAL SECTION
STAGE 2

STA 356+60 TO STA 362+40 (EB)

LEGEND

1. EXISTING PAVEMENT MARKING
2. WET REFLECTIVE TEMPORARY TAPE, - TYPE III, 4 INCH (YELLOW)
3. WET REFLECTIVE TEMPORARY TAPE, - TYPE III, 4 INCH (WHITE)
4. WET REFLECTIVE TEMPORARY TAPE, - TYPE III, 5 INCH (WHITE)
5. TEMPORARY PAVEMENT MARKING - LINE 6" (YELLOW) (ON BARRIER)
6. TEMPORARY PAVEMENT MARKING - LINE 6" (WHITE) (ON BARRIER)
7. WET REFLECTIVE TEMPORARY TAPE - TYPE III, 8 INCH (WHITE)

TEMPORARY CONCRETE BARRIER

TYPE II BARRIER, DRUM, OR VERTICAL BARRICADE WITH STEADY BURN MONODIRECTIONAL LIGHT

WORK ZONE

FILE NAME =	DESIGNED - AJP	REVISED -	benesch	STATE OF ILLINOIS DEPARTMENT OF TRANSPORTATION	MAINTENANCE OF TRAFFIC TYPICAL SECTIONS – STAGE 2	F.A.I. RTE.	SECTION	COUNTY	TOTAL SHEETS	SHEET NO.
...\prpln_ABC_C4_ml_mot_typ_st_2.25.dgn	DRAWN - TMB	REVISED -				290	2009-099BR	COOK/DUPAGE	309	78
USER NAME = tblank	CHECKED - JJT	REVISED -						CONTRACT NO. 60157		
PLOT DATE = 11/13/2009	DATE - 10/16/09	REVISED -			SCALE: N.T.S. SHEET NO. 33 OF 69 SHEETS STA. TO STA.	FED. ROAD DIST. NO.	ILLINOIS	FED. AID PROJECT		