THIS SHEET DELETED

1 DELETED ENTIRE SHEET 2/4/2026 1

MODEL: Default
FILE NAME: pw://transystems-pw.bentley.com:transyscorp-pw1-hosted/Documents/Projects_2018/CH401/401180022/03-WSP/CAD/62R23-RB-1/Sheets/CIM0162R23-sht-EAST-design-02.dgn

USER NAME = tmmroz	DESIGNED - JAP	REVISED - 1 01/30/2026	STATE OF ILLINOIS DEPARTMENT OF TRANSPORTATION	PROPOSED ROADWAY PLAN I-80			F.A.I. RTE.	SECTION	COUNTY	TOTAL SHEETS	SHEET NO.
	DRAWN - TMM	REVISED -					80	FAI 80 21 STRUCTURE 2	WILL	1230	101
PLOT SCALE = 100.000 ' / in.	CHECKED - JIR	REVISED -							CONTRACT NO. 62R23		
PLOT DATE = 1/28/2026	DATE - 11/7/2025	REVISED -		SCALE: 1" = 50'	SHEET 3 OF 5 SHEETS	STA. TO STA.			ILLINOIS	FED. AID PROJECT	

THIS SHEET DELETED

1 DELETED ENTIRE SHEET 2/4/2026

1

MODEL: Default
FILE NAME: pw://transystems-pw.bentley.com:transyscorp-pw1-hosted/Documents/Projects_2018/CH401/401180022/03-WSP/CAD/62R23-RB-1/Sheets/CIM0162R23-sht-EAST-design-03.dgn

USER NAME = tmmroz	DESIGNED - JAP	REVISED - 1 01/30/2026	STATE OF ILLINOIS DEPARTMENT OF TRANSPORTATION	PROPOSED ROADWAY PLAN I-80	
	DRAWN - TMM	REVISED -			
PLOT SCALE = 100.000 ' / in.	CHECKED - JIR	REVISED -			
PLOT DATE = 1/28/2026	DATE - 11/7/2025	REVISED -		SCALE: 1" = 50' SHEET 4 OF 5 SHEETS STA. TO STA.	

F.A.I. RTE.	SECTION	COUNTY	TOTAL SHEETS	SHEET NO.
80	FAI 80 21 STRUCTURE 2	WILL	1230	102
		CONTRACT NO. 62R23		
		ILLINOIS FED. AID PROJECT		

THIS SHEET DELETED

1 DELETED ENTIRE SHEET 2/4/2026

USER NAME = tmmroz	DESIGNED - JAP	REVISED - 1 01/30/2026	STATE OF ILLINOIS DEPARTMENT OF TRANSPORTATION	PROPOSED ROADWAY PLAN I-80	
	DRAWN - TMM	REVISED -			
PLOT SCALE = 100.000 ' / in.	CHECKED - JIR	REVISED -			
PLOT DATE = 1/28/2026	DATE - 11/7/2025	REVISED -		SCALE: 1" = 50' SHEET 5 OF 5 SHEETS STA. TO STA.	

F.A.I. RTE.	SECTION	COUNTY	TOTAL SHEETS	SHEET NO.
80	FAI 80 21 STRUCTURE 2	WILL	1230	103
		CONTRACT NO. 62R23		
		ILLINOIS FED. AID PROJECT		

MODEL: Default
FILE NAME: pw://transystems-pw.bentley.com:transyscorp-pw1-hosted/Documents/Projects_2018/CH401/401180022/03-WSP/CAD/62R23-RB-1/Sheets/CIM0162R23-sht-EAST-design-04.dgn

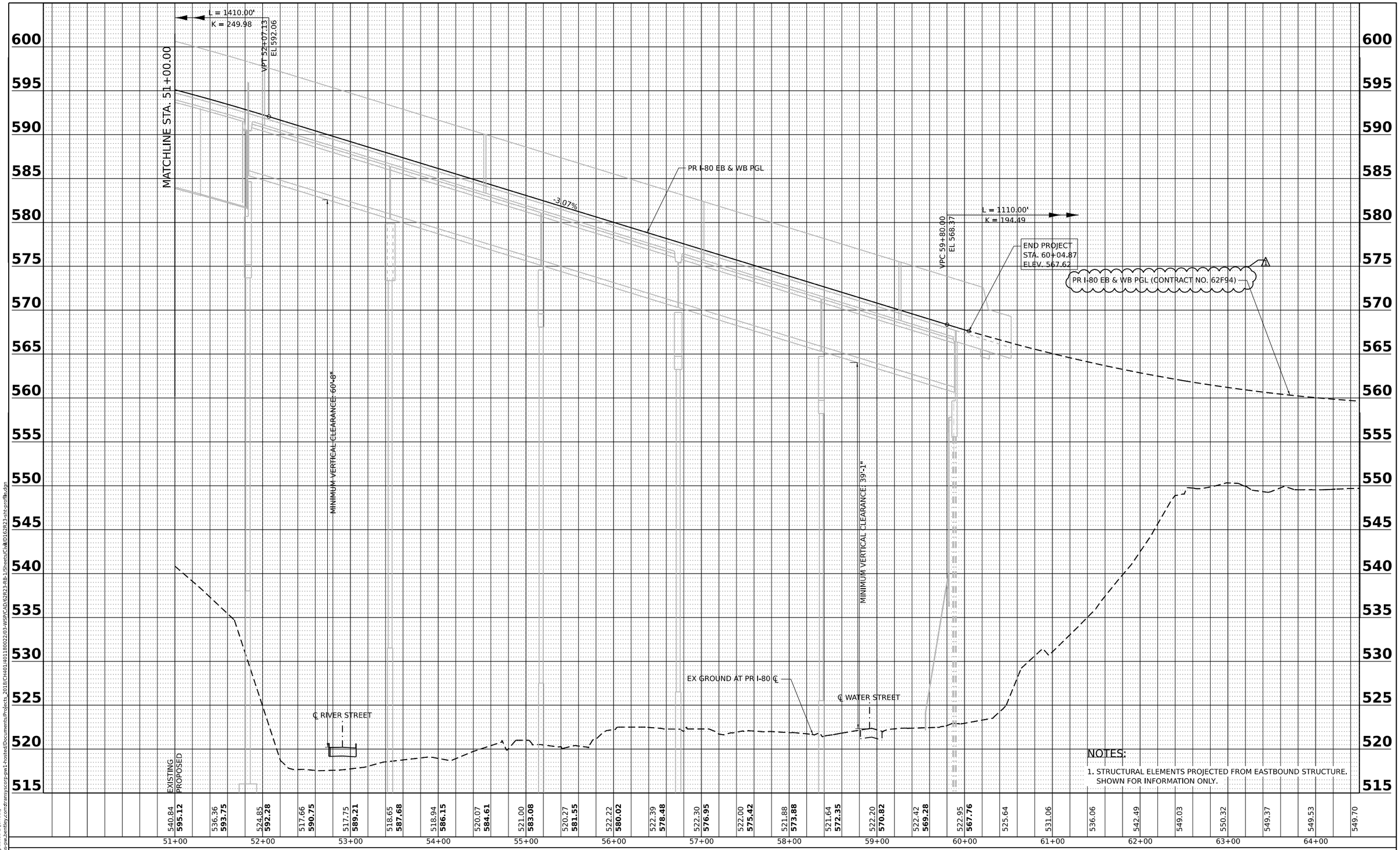

NOTES:

1. STRUCTURAL ELEMENTS PROJECTED FROM EASTBOUND STRUCTURE. SHOWN FOR INFORMATION ONLY.

1 REVISED SHEET 2/4/2026

PLAN
NOTE BOOK NO.
SURVEYED
PLOTTED
ALIGNMENT CHECKED
RT. OF WAY CHECKED
CADD FILE NAME
BY
DATE

PROFILE
NOTE BOOK NO.
SURVEYED
PLOTTED
GRADES CHECKED
B.M. NOTED
STRUCTURE NOTAT'NS CHKD
BY
DATE

MODEL: PR-I80-NORTH-4 - Updated-2 [Sheet]
FILE NAME: pw://transystems-pw.bentley.com:transystemscorp-pw1-hosted/Documents/Projects_2018/CH401/401180022/03-WSP/CAD/62R23-RB-1/Sheets/Civil/0162R23-sht-proflle.dgn

WSP USA Inc.
30 N. LASALLE STREET
SUITE 4200
CHICAGO, IL 60602
TEL: (312) 782-8150

USER NAME = donahuek1	DESIGNED - KSD	REVISED - 1 01/30/2026	
	DRAWN - KSD	REVISED -	
PLOT SCALE = 0.16666667 ' / in.	CHECKED - MA	REVISED -	
PLOT DATE = 1/28/2026	DATE - 11/7/2025	REVISED -	

STATE OF ILLINOIS
DEPARTMENT OF TRANSPORTATION

PROPOSED ROADWAY PROFILE
I-80

SCALE: HORIZ: 1"=50' VERT: 1"=5' | SHEET 2 OF 2 SHEETS | STA. TO STA.

F.A.I. RTE.	SECTION	COUNTY	TOTAL SHEETS	SHEET NO.
80	FAI 80 21 STRUCTURE 2	WILL	1230	105
		CONTRACT NO. 62R23		
		ILLINOIS	FED. AID PROJECT	

THIS SHEET DELETED

1 DELETED ENTIRE SHEET 2/4/2026 1

MODEL: Ramp A - Profile 1 [Sheet]
FILE NAME: pw://transystems-pw.bentley.com:transyscorp-pw1-hosted/Documents/Projects_2018/CH401/401180022/03-WSP/CAD/62R23-RB-1/3D/EAST/D162R23-EAST-align-ramp-A-pr.dgn

USER NAME = tmmroz	DESIGNED - JAP	REVISED - 1 01/30/2026	STATE OF ILLINOIS DEPARTMENT OF TRANSPORTATION	ROADWAY PROFILE CHICAGO STREET RAMP A	F.A.I. RTE. 80 / SECTION FAI 80 21 STRUCTURE 2 / COUNTY WILL / TOTAL SHEETS 1230 / SHEET NO. 106
	DRAWN - TMM	REVISED -			CONTRACT NO. 62R23
PLOT SCALE = 0.16666667 ' / in.	CHECKED - JIR	REVISED -			ILLINOIS FED. AID PROJECT
PLOT DATE = 1/28/2026	DATE - 11/7/2025	REVISED -		SCALE: 50H:5V / SHEET 1 OF 2 SHEETS / STA. 599+00 TO STA. 610+50	

THIS SHEET DELETED

1 DELETED ENTIRE SHEET 2/4/2026 1

MODEL: Ramp A - Profile 2 [Sheet]
FILE NAME: pw://transystems-pw.bentley.com:transyscorp-pw1-hosted/Documents/Projects_2018/CH401/401180022/03-WSP/CAD/62R23-RB-1/3D/EAST/D162R23-EAST-align-ramp-A-pr.dgn

USER NAME = tmmroz	DESIGNED - JAP	REVISED - 1 01/30/2026	STATE OF ILLINOIS DEPARTMENT OF TRANSPORTATION	ROADWAY PROFILE CHICAGO STREET RAMP A	
	DRAWN - TMM	REVISED -			
PLOT SCALE = 0.16666667 ' / in.	CHECKED - JIR	REVISED -			
PLOT DATE = 1/28/2026	DATE - 11/7/2025	REVISED -		SCALE: 50H:5V	SHEET 2 OF 2 SHEETS STA. 610+50 TO STA. 623+00

F.A.I. RTE.	SECTION	COUNTY	TOTAL SHEETS	SHEET NO.
80	FAI 80 21 STRUCTURE 2	WILL	1230	107
		CONTRACT NO. 62R23		
	ILLINOIS	FED. AID PROJECT		

THIS SHEET DELETED

1 DELETED ENTIRE SHEET 2/4/2026 1

MODEL: Ramp C_profile - Profile 1 [Sheet]
FILE NAME: pw://transystems-pw.bentley.com:transyscorp-pw1-hosted/Documents/Projects_2018/CH401/401180022/03-WSP/CAD/62R23-RB-1/3D/EAST/D162R23-EAST-align-rampC-pr.dgn

USER NAME = tmmroz	DESIGNED - JAP	REVISED - 1 01/30/2026	STATE OF ILLINOIS DEPARTMENT OF TRANSPORTATION	ROADWAY PROFILE CHICAGO STREET RAMP C	F.A.I. RTE. 80 / SECTION FAI 80 21 STRUCTURE 2 / COUNTY WILL / TOTAL SHEETS 1230 / SHEET NO. 108
	DRAWN - TMM	REVISED -			CONTRACT NO. 62R23
PLOT SCALE = 0.16666667 ' / in.	CHECKED - JIR	REVISED -			
PLOT DATE = 1/28/2026	DATE - 11/7/2025	REVISED -		SCALE: 50H:5V / SHEET 1 OF 1 SHEETS / STA. 3+00 TO STA. 18+00	ILLINOIS FED. AID PROJECT

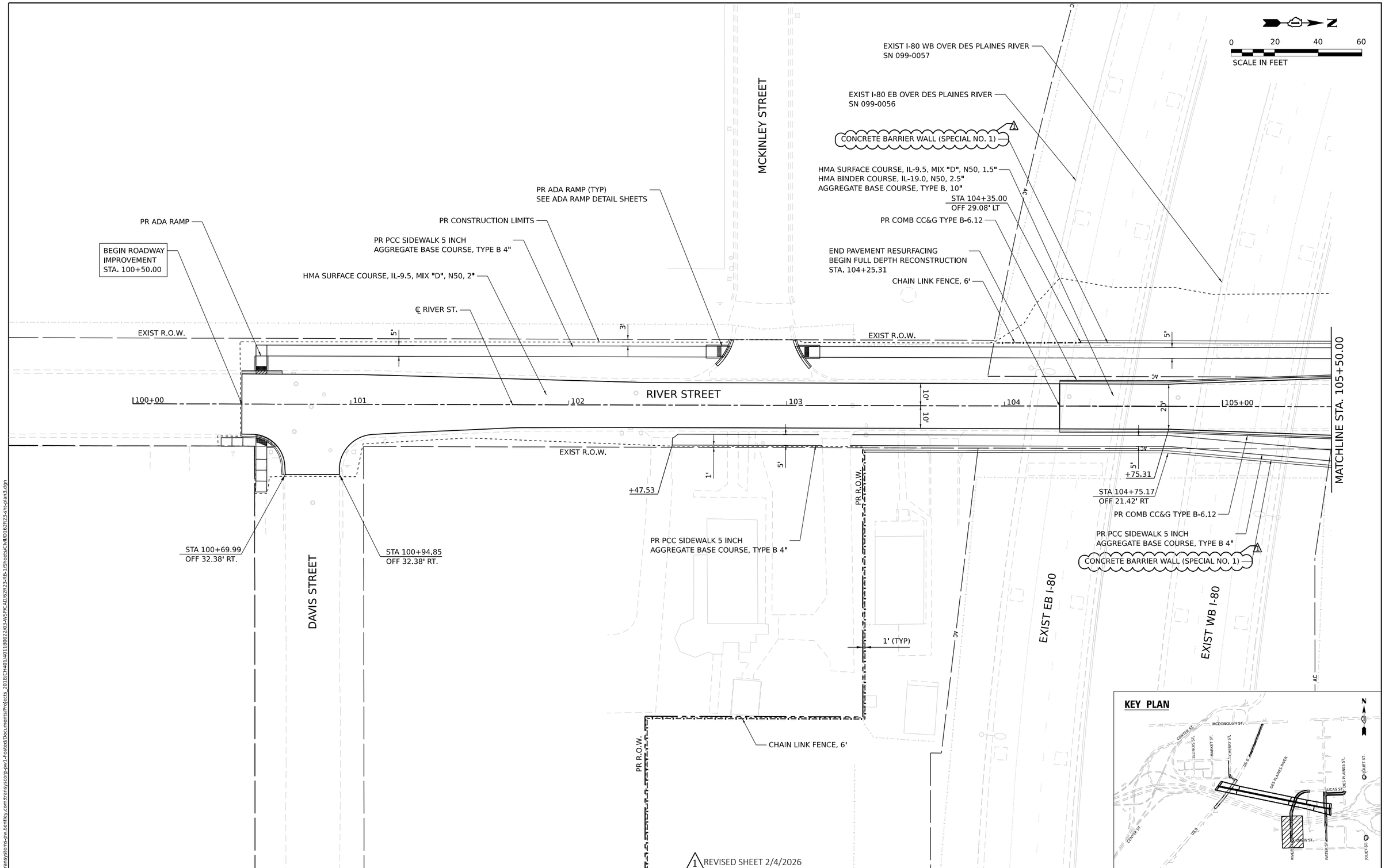

MODEL: Default
FILE NAME: pw://transystems-pw.bentley.com:transyscorp-pw1-hosted/Documents/Projects_2018/CH401/401180022/03-WSP/CAD/62R23-RB-1/Sheets/CM0162R23-sht-plan3.dgn

WSP USA Inc.
30 N. LASALLE STREET
SUITE 4200
CHICAGO, IL 60602
TEL: (312) 782-8150

USER NAME = donahuek1	DESIGNED - AD	REVISED - 1	01/30/2026
	DRAWN - AD	REVISED -	
PLOT SCALE = 40.000 ' / in.	CHECKED - KSD	REVISED -	
PLOT DATE = 1/28/2026	DATE - 11/7/2025	REVISED -	

STATE OF ILLINOIS
DEPARTMENT OF TRANSPORTATION

PROPOSED ROADWAY PLAN
RIVER STREET

SCALE: 1"=20' | SHEET 5 OF 14 SHEETS | STA. | TO STA.

F.A.I. RTE.	SECTION	COUNTY	TOTAL SHEETS	SHEET NO.
80	FAI 80 21 STRUCTURE 2	WILL	1230	113
		CONTRACT NO. 62R23		
	ILLINOIS	FED. AID PROJECT		

I-80 EB OVER DES PLAINES RIVER
SN 099-8325

℄ I-80

I-80 WB OVER DES PLAINES RIVER
SN 099-8309

CHAIN LINK FENCE, 6'

PR TEMPORARY EASEMENT

PR CONSTRUCTION LIMITS

PR PERMANENT EASEMENT

PR R.O.W.

EXIST R.O.W.

LUCAS STREET

STA 107+63.00
OFF 62.68' LT.

STA 107+87.00
OFF 62.68' LT.

PR PCC SIDEWALK 5 INCH
AGGREGATE BASE COURSE, TYPE B 4"

PR COMB CC&G TYPE B-6.12

CHAIN LINK GATES, 6' X 12' DOUBLE

PCC DRIVEWAY PAVEMENT, 6"
AGGREGATE BASE COURSE, TYPE B 4"

CONCRETE BARRIER WALL
(SPECIAL NO. 1)

STA 107+66.00
OFF 15.00' LT.

STA 107+84.00
OFF 15.00' LT.

STA 110+13.00
OFF 29.00' LT.

PR COMB CC&G TYPE B-6.12

PR PERMANENT
EASEMENT

RIVER STREET

MATCHLINE STA. 105+50.00

PR CONSTRUCTION LIMITS

STA 107+66.00
OFF 15.00 RT.

STA 107+84.00
OFF 15.00' RT.

℄ RIVER ST.

+75.31

STA 105+75.31
OFF 22.08' RT.

STA 105+75.31
OFF 30.08' RT.

PR PCC SIDEWALK 5 INCH
AGGREGATE BASE COURSE, TYPE B 4"

CONCRETE BARRIER WALL (SPECIAL NO. 1)

HMA SURFACE COURSE, IL-9.5, MIX "D", N50, 1.5"
HMA BINDER COURSE, IL-19.0, N50, 2.5"
AGGREGATE BASE COURSE, TYPE B, 10"

PR COMB CC&G TYPE B-6.12

PR COMB CC&G TYPE B-6.12

PR PCC SIDEWALK 5 INCH
AGGREGATE BASE COURSE, TYPE B 4"

CONCRETE BARRIER WALL
(SPECIAL NO. 1)

HMA SURFACE COURSE, IL-9.5, MIX "D", N50, 1.5"
HMA BINDER COURSE, IL-19.0, N50, 2.5"
AGGREGATE BASE COURSE, TYPE B, 10"

DUNCAN STREET

CHAIN LINK GATES, 6' X 12' DOUBLE

PCC DRIVEWAY PAVEMENT, 6"
AGGREGATE BASE COURSE, TYPE B 4"

EB I-80

WB I-80

℄ CHICAGO RAMP C

PCC DRIVEWAY PAVEMENT, 6"
AGGREGATE BASE COURSE, TYPE B 4"

STA 111+74.27
OFF 22.08' RT

PCC DRIVEWAY PAVEMENT, 6"
AGGREGATE BASE COURSE, TYPE B 4"

PR R.O.W.

STA 112+17.00
OFF 19.32' RT

KIEP AVENUE

END PAVEMENT RECONSTRUCTION,
BEGIN PAVEMENT RESURFACING
STA. 112+17.00

HMA SURFACE COURSE, IL-9.5, MIX "D", N50, 2"

MATCHLINE STA. 112+50.00

℄ CHICAGO RAMP A

0 20 40 60
SCALE IN FEET

N

1 REVISED SHEET 2/4/2026

KEY PLAN

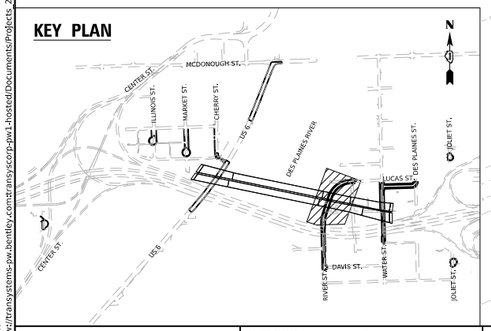

MODEL: Default
FILE NAME: pw://transystems-pw.bentley.com:transyscorp-pw1-hosted/Documents/Projects_2018/CH401/401180022/03-WSP/CAD/62R23-RB-1/Sheets/CMD162R23-cht-plan4.dgn

WSP USA Inc.
30 N. LASALLE STREET
SUITE 4200
CHICAGO, IL 60602
TEL: (312) 782-8150

USER NAME = donahuek1	DESIGNED - AD	REVISED - 1 01/30/2026	
	DRAWN - AD	REVISED -	
PLOT SCALE = 40.000 ' / in.	CHECKED - KSD	REVISED -	
PLOT DATE = 1/28/2026	DATE - 11/7/2025	REVISED -	

STATE OF ILLINOIS
DEPARTMENT OF TRANSPORTATION

PROPOSED ROADWAY PLAN
RIVER STREET

SCALE: 1"=20' | SHEET 6 OF 14 SHEETS | STA. TO STA.

F.A.I. RTE.	SECTION	COUNTY	TOTAL SHEETS	SHEET NO.
80	FAI 80 21 STRUCTURE 2	WILL	1230	114
		CONTRACT NO. 62R23		
	ILLINOIS	FED. AID PROJECT		

N

0 20 40 60
SCALE IN FEET

℄ WATER ST.

END ROADWAY IMPROVEMENT STA. 308+55.00

EXIST R.O.W.

PR CONSTRUCTION LIMITS

LUCAS STREET

114

115+00

309

308

PR R.O.W.

PR ADA RAMP (TYP)
SEE ADA RAMP DETAIL SHEETS

PR PCC SIDEWALK 5 INCH
AGGREGATE BASE COURSE, TYPE B 4"

PR COMB CC&G TYPE B-6.12

PR R.O.W.

R 25'

STA 400+38.65
OFF 14.00' LT

5'

8.5'

LUCAS STREET STA. 400+00.=
WATER STREET STA. 307+43.73

℄ LUCAS / DES PLAINES STREET

14'

400+00

401

402

403

LUCAS STREET

14'

END ROADWAY IMPROVEMENT STA. 403+96.55

DES PLAINES STREET

405+00

404

PR R.O.W.

STA 404+28.90
OFF 34.24' RT

STA 403+77.25
OFF 42.48' RT

℄ WATER ST.

8.5'

5'

PR COMB CC&G
TYPE B-6.12

R 25'

2'

STA 400+38.65
OFF 14.00' RT

PR PCC SIDEWALK 5 INCH
AGGREGATE BASE COURSE, TYPE B 4"

10.0'

STA 400+35.00
OFF 39.08' RT

BEGIN ROADWAY IMPROVEMENT STA. 400+11.65

HMA SURFACE COURSE, IL-9.5, MIX "D", N50, 1.5"
HMA BINDER COURSE, IL-19.0, N50, 2.5"
AGGREGATE BASE COURSE, TYPE B, 10"

CONCRETE BARRIER WALL (SPECIAL NO. 1) 1

STA 403+44.74
OFF 44.18' RT

STA 403+27.46
OFF 37.58' RT

STA 403+00.00
OFF 39.08' RT

5'

307

WATER STREET

I-80 WB OVER DES PLAINES RIVER
SN 099-8309

℄ CHICAGO RAMP C

14' 14'

FOR WATER STREET ROADWAY PLAN,
SEE SHEET #119

306

20

19

18

1 REVISED SHEET 2/4/2026

KEY PLAN

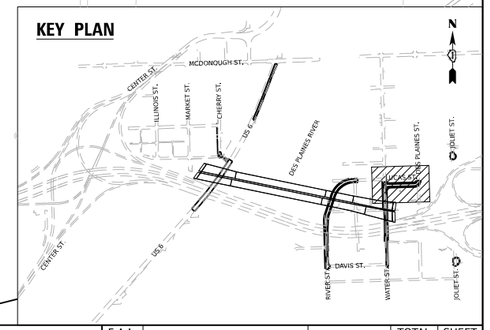

MODEL: Default
FILE NAME: pw://transystems-pw.bentley.com:transyscorp-pw1-hosted/Documents/Projects_2018/CH401/401180022/03-WSP/CAD/62R23-RB-1/Sheets/CH401162R23-sht-plan16.dgn

WSP USA Inc.
30 N. LASALLE STREET
SUITE 4200
CHICAGO, IL 60602
TEL: (312) 782-8150

USER NAME = donahuek1	DESIGNED - AD	REVISED - 1 01/30/2026	
	DRAWN - AD	REVISED -	
PLOT SCALE = 40.000 ' / in.	CHECKED - KSD	REVISED -	
PLOT DATE = 1/28/2026	DATE - 11/7/2025	REVISED -	

STATE OF ILLINOIS
DEPARTMENT OF TRANSPORTATION

PROPOSED ROADWAY PLAN
LUCAS STREET

SCALE: 1"=20' | SHEET 8 OF 14 SHEETS | STA. TO STA.

F.A.I. RTE.	SECTION	COUNTY	TOTAL SHEETS	SHEET NO.
80	FAI 80 21 STRUCTURE 2	WILL	1230	116
		CONTRACT NO. 62R23		
		ILLINOIS	FED. AID PROJECT	

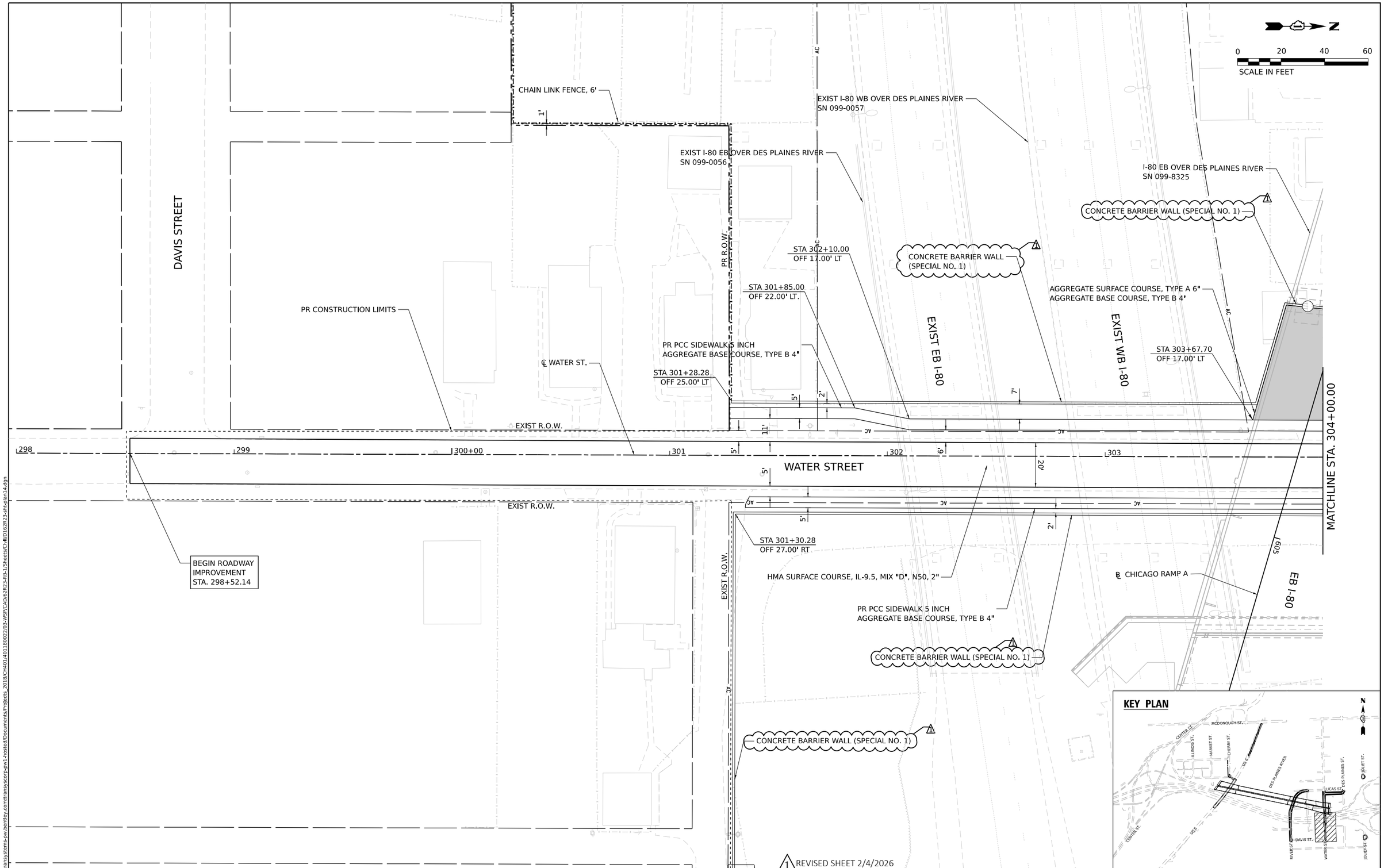

MODEL: Default
FILE NAME: pw://transystems-pw.bentley.com:transyscorp-pw1-hosted/Documents/Projects_2018/CH401140118002/03-WSP/CAD/62R23-RB-1/Sheets/CMD162R23-sht-plan14.dgn

WSP USA Inc.
30 N. LASALLE STREET
SUITE 4200
CHICAGO, IL 60602
TEL: (312) 782-8150

USER NAME = donahuek1	DESIGNED - AD	REVISED - 1 01/30/2026	
	DRAWN - AD	REVISED -	
PLOT SCALE = 40.000 ' / in.	CHECKED - KSD	REVISED -	
PLOT DATE = 1/28/2026	DATE - 11/7/2025	REVISED -	

STATE OF ILLINOIS
DEPARTMENT OF TRANSPORTATION

PROPOSED ROADWAY PLAN
WATER STREET

SCALE: 1"=20' | SHEET 10 OF 14 SHEETS | STA. TO STA.

F.A.I. RTE.	SECTION	COUNTY	TOTAL SHEETS	SHEET NO.
80	FAI 80 21 STRUCTURE 2	WILL	1230	118
		CONTRACT NO. 62R23		
	ILLINOIS	FED. AID PROJECT		

MATCHLINE STA. 112+50.00

0 20 40 60
SCALE IN FEET

N

1'
2'

PR PCC SIDEWALK 5 INCH
AGGREGATE BASE COURSE, TYPE B 4"

CONCRETE BARRIER WALL (SPECIAL NO. 1)

HMA SURFACE COURSE, IL-9.5, MIX "D", N50, 2"

℄ I-80

I-80 WB OVER DES PLAINES RIVER
SN 099-8309

DUNCAN STREET

AGGREGATE SURFACE COURSE, TYPE A 6"
AGGREGATE BASE COURSE, TYPE B 4"

PCC DRIVEWAY PAVEMENT, 6"
AGGREGATE BASE COURSE, TYPE B 4"

℄ CHICAGO RAMP C

LUCAS STREET STA. 400+00.00=
WATER STREET STA. 307+43.73

PR PCC SIDEWALK 5 INCH
AGGREGATE BASE COURSE, TYPE B 4"

CONCRETE BARRIER WALL (SPECIAL NO. 1)

HMA SURFACE COURSE, IL-9.5, MIX "D", N50, 2"

STA 305+83.00
OFF 29.00' LT

PR R.O.W.

RIVER STREET

EXIST R.O.W.

SHERIDAN STREET

PR CONSTRUCTION LIMITS

END ROADWAY
IMPROVEMENT
STA. 308+55.00

℄ WATER ST.

PCC DRIVEWAY PAVEMENT, 6"
AGGREGATE BASE COURSE,
TYPE B 4"

STA 304+51.17
OFF 17.00' LT.

STA 304+97.89
OFF 29.00' LT.

STA 304+40.00
OFF 6.05' LT.

MATCHLINE STA. 304+00.00

STA 305+15.00
OFF 14.00' LT.

WATER STREET

STA 304+10.00
OFF 6.05' LT.

STA 305+45.00
OFF 14.00' LT.

304 305+00 306 307 308 309 310

115+00

400+00

EXIST R.O.W.

PR COMB CC&G
TYPE B-6.12

+61.00

+85.32

PR COMB CC&G
TYPE B-6.12

I-80 WB OVER
DES PLAINES RIVER
SN 099-8309

PR PCC SIDEWALK 5 INCH
AGGREGATE BASE COURSE, TYPE B 4"

CONCRETE BARRIER WALL
(SPECIAL NO. 1)

STA 306+79.73
OFF 24.00' RT.

STA 306+78.73
OFF 36.00' RT

STA 307+03.88
OFF 29.00' RT.

PR ADA RAMP (TYP)
SEE ADA RAMP DETAIL SHEETS

FOR LUCAS STREET ROADWAY PLAN,
SEE SHEET #116

LUCAS STREET

℄ LUCAS / DES PLAINES ST.

PR R.O.W.

401

WB I-80

AC

KEY PLAN

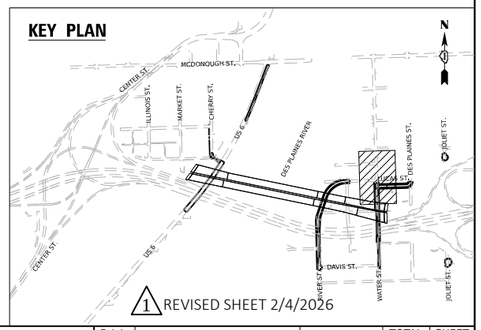

1 REVISED SHEET 2/4/2026

MODEL: Default
FILE NAME: pw://transystems-pw.bentley.com:transyscorp-pw1-hosted/Documents/Projects_2018/CH401/401180022/03-WSP/CAD/62R23-Rb-1/Sheets/CWM01062R23-sht-plan15.dgn

WSP USA Inc.
30 N. LASALLE STREET
SUITE 4200
CHICAGO, IL 60602
TEL: (312) 782-8150

USER NAME = donahuek1	DESIGNED - AD	REVISED - 1	01/30/2026
	DRAWN - AD	REVISED -	
PLOT SCALE = 40.000 ' / in.	CHECKED - KSD	REVISED -	
PLOT DATE = 1/28/2026	DATE - 11/7/2025	REVISED -	

STATE OF ILLINOIS
DEPARTMENT OF TRANSPORTATION

PROPOSED ROADWAY PLAN
WATER STREET

SCALE: 1"=20' | SHEET 11 OF 14 SHEETS | STA. TO STA.

F.A.I. RTE.	SECTION	COUNTY	TOTAL SHEETS	SHEET NO.
80	FAI 80 21 STRUCTURE 2	WILL	1230	119
		CONTRACT NO. 62R23		
		ILLINOIS	FED. AID PROJECT	

THIS SHEET DELETED

1 DELETED ENTIRE SHEET 2/4/2026 1

MODEL: Default
FILE NAME: pw://transystems-pw.bentley.com:transyscorp-pw1-hosted/Documents/Projects_2018/CH401/401180022/03-WSP/CAD/62R23-RB-1/Sheets/CMD162R23-sht-EAST-supers-01

USER NAME = tmmroz	DESIGNED - JAP	REVISED - 1 01/30/2026	STATE OF ILLINOIS DEPARTMENT OF TRANSPORTATION	SUPERELEVATION TRANSITION SECTIONS I-80 MAINLINE	F.A.I. RTE. 80 / SECTION FAI 80 21 STRUCTURE 2 / COUNTY WILL / TOTAL SHEETS 1230 / SHEET NO. 130
	DRAWN - TMM	REVISED -			CONTRACT NO. 62R23
PLOT SCALE = 40.000 ' / in.	CHECKED - JIR	REVISED -			
PLOT DATE = 1/28/2026	DATE - 11/7/2025	REVISED -		SCALE: NTS / SHEET 2 OF 3 SHEETS / STA. / TO STA.	ILLINOIS / FED. AID PROJECT

THIS SHEET DELETED

1 DELETED ENTIRE SHEET 2/4/2026

USER NAME = tmmroz	DESIGNED - JAP	REVISED - 1 01/30/2026	STATE OF ILLINOIS DEPARTMENT OF TRANSPORTATION	SUPERELEVATION TRANSITION SECTIONS CHICAGO RAMPS A & C				F.A.I. RTE.	SECTION	COUNTY	TOTAL SHEETS / SHEET NO.
	DRAWN - TMM	REVISED -						80	FAI 80 21 STRUCTURE 2	WILL	1230 / 131
PLOT SCALE = 40.000 ' / in.	CHECKED - JIR	REVISED -								CONTRACT NO. 62R23	
PLOT DATE = 1/28/2026	DATE - 11/7/2025	REVISED -		SCALE: NTS	SHEET 3 OF 3 SHEETS	STA.	TO STA.		ILLINOIS	FED. AID PROJECT	

MODEL: Default
FILE NAME: pw://transystems-pw.bentley.com:transyscorp-pw1-hosted/Documents/Projects_2018/CH401/401180022/03-WSP/CAD/62R23-RB-1/Sheets/CLMD162R23-sht-EAST-supers-02

THIS SHEET DELETED

1 DELETED ENTIRE SHEET 2/4/2026

USER NAME = tmmroz	DESIGNED - JAP	REVISED - 1 01/30/2026	STATE OF ILLINOIS DEPARTMENT OF TRANSPORTATION	PROPOSED GRADING PLAN I-80				F.A.I. RTE.	SECTION	COUNTY	TOTAL SHEETS	SHEET NO.
	DRAWN - TMM	REVISED -						80	FAI 80 21 STRUCTURE 2	WILL	1230	132
PLOT SCALE = 100.000 ' / in.	CHECKED - JIR	REVISED -								CONTRACT NO. 62R23		
PLOT DATE = 1/28/2026	DATE - 11/7/2025	REVISED -		SCALE: 1" = 50'	SHEET 1 OF 3 SHEETS	STA.	TO STA.		ILLINOIS	FED. AID PROJECT		

MODEL: Default
FILE NAME: pw://transystems-pw.bentley.com:transyscorp-pw1-hosted/Documents/Projects_2018/CH401/401180022/03-WSP/CAD/62R23-RB-1/Sheets/CNM0162R23-sht-EAST-grading-01.dgn

THIS SHEET DELETED

1 DELETED ENTIRE SHEET 2/4/2026

1

MODEL: Default
FILE NAME: pw://transystems-pw.bentley.com:transyscorp-pw1-hosted/Documents/Projects_2018/CH401/401180022/03-WSP/CAD/62R23-RB-1/Sheets/CMD162R23-sht-EAST-grading-02.dgn

USER NAME = tmmroz	DESIGNED - JAP	REVISED - 1 01/30/2026	STATE OF ILLINOIS DEPARTMENT OF TRANSPORTATION	PROPOSED GRADING PLAN I-80				F.A.I. RTE.	SECTION	COUNTY	TOTAL SHEETS	SHEET NO.
	DRAWN - TMM	REVISED -						80	FAI 80 21 STRUCTURE 2	WILL	1230	133
PLOT SCALE = 100.000 ' / in.	CHECKED - JIR	REVISED -								CONTRACT NO. 62R23		
PLOT DATE = 1/28/2026	DATE - 11/7/2025	REVISED -		SCALE: 1" = 50'	SHEET 2 OF 3 SHEETS	STA.	TO STA.		ILLINOIS	FED. AID PROJECT		

THIS SHEET DELETED

1 DELETED ENTIRE SHEET 2/4/2026

1

MODEL: Default
FILE NAME: pw://transystems-pw.bentley.com:transyscorp-pw1-hosted/Documents/Projects_2018/CH401/401180022/03-WSP/CAD/62R23-RB-1/Sheets/CNM0162R23-sht-EAST-grading-03.dgn

USER NAME = tmmroz	DESIGNED - JAP	REVISED - 1 01/30/2026	STATE OF ILLINOIS DEPARTMENT OF TRANSPORTATION	PROPOSED GRADING PLAN I-80				F.A.I. RTE.	SECTION	COUNTY	TOTAL SHEETS	SHEET NO.
	DRAWN - TMM	REVISED -						80	FAI 80 21 STRUCTURE 2	WILL	1230	134
PLOT SCALE = 100.000 ' / in.	CHECKED - JIR	REVISED -								CONTRACT NO. 62R23		
PLOT DATE = 1/28/2026	DATE - 11/7/2025	REVISED -		SCALE: 1" = 50'	SHEET 3 OF 3 SHEETS	STA.	TO STA.		ILLINOIS	FED. AID PROJECT		

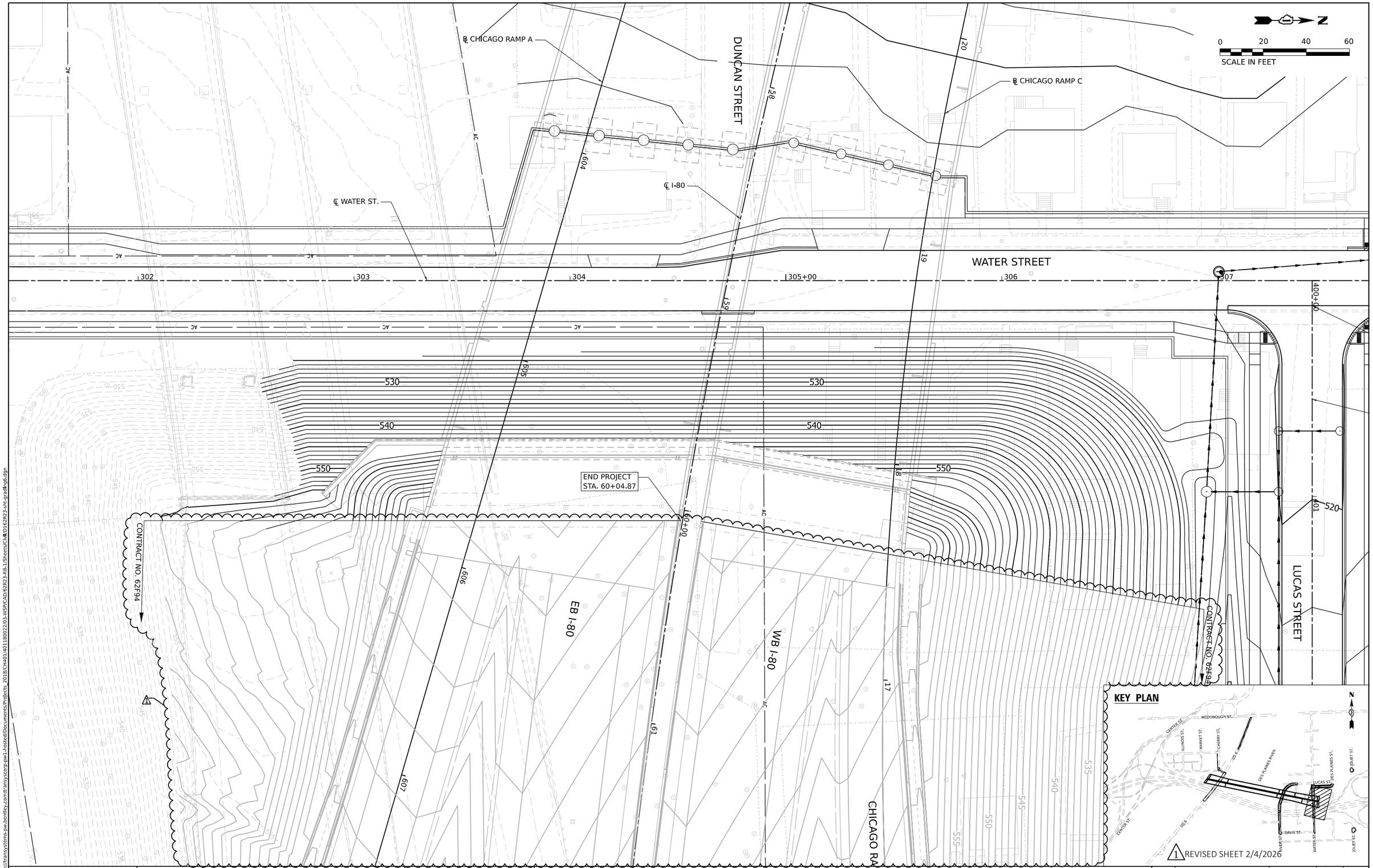

MODEL: Default
FILE NAME: pw://transystems-pw.bentley.com:transyscorp-pw1-Hosted/Documents/Projects_2018/CH401/401180022/03-WSP/CAD/62R23-RB-1/Sheets/CH401D162R23-sht-grading6.dgn

WSP USA Inc.
30 N. LASALLE STREET
SUITE 4200
CHICAGO, IL 60602
TEL: (312) 782-8150

USER NAME = donahuek1	DESIGNED - AD	REVISED -	01/30/2026
	DRAWN - AD	REVISED -	
PLOT SCALE = 40.000 ' / in.	CHECKED - KSD	REVISED -	
PLOT DATE = 1/28/2026	DATE - 11/7/2025	REVISED -	

STATE OF ILLINOIS
DEPARTMENT OF TRANSPORTATION

PROPOSED GRADING PLAN
I-80 EAST ABUTMENT

SCALE: 1"=20' | SHEET 5 OF 9 SHEETS | STA. | TO STA.

F.A.I. RTE.	SECTION	COUNTY	TOTAL SHEETS	SHEET NO.
80	FAI 80 21 STRUCTURE 2	WILL	1230	136
		CONTRACT NO. 62R23		
		ILLINOIS	FED. AID PROJECT	

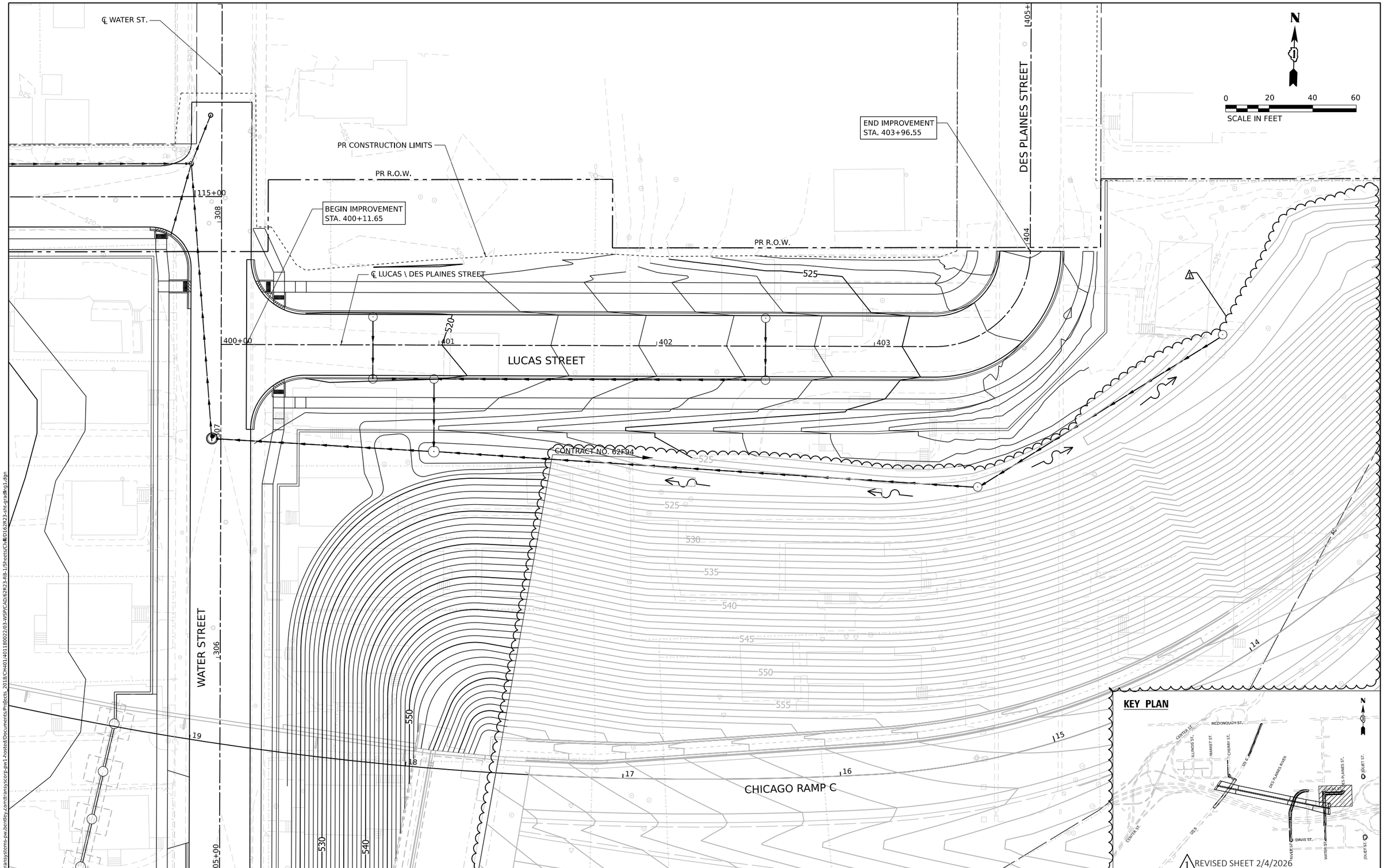

MODEL: Default
FILE NAME: pw://transystems-pw.bentley.com:transyscorp-pw1-hosted/Documents/Projects_2018/CH401/401180022/03-WSP/CAD/62R23-RB-1/Sheets/CMD162R23-sht-grading1.dgn

WSP USA Inc.
30 N. LASALLE STREET
SUITE 4200
CHICAGO, IL 60602
TEL: (312) 782-8150

USER NAME = donahuek1	DESIGNED - AD	REVISED - 1 01/30/2026	
	DRAWN - AD	REVISED -	
PLOT SCALE = 40.000 ' / in.	CHECKED - KSD	REVISED -	
PLOT DATE = 1/28/2026	DATE - 11/7/2025	REVISED -	

STATE OF ILLINOIS
DEPARTMENT OF TRANSPORTATION

PROPOSED GRADING PLAN
LUCAS STREET

SCALE: 1"=20' | SHEET 6 OF 9 SHEETS | STA. TO STA.

F.A.I. RTE.	SECTION	COUNTY	TOTAL SHEETS	SHEET NO.
80	FAI 80 21 STRUCTURE 2	WILL	1230	137
		CONTRACT NO. 62R23		
	ILLINOIS	FED. AID PROJECT		

THIS SHEET DELETED

1 DELETED ENTIRE SHEET 2/4/2026 1

MODEL: Default
FILE NAME: pw://transystems-pw.bentley.com:transyscorp-pw1-hosted/Documents/Projects_2018/CH401/401180022/03-WSP/CAD/62R23-RB-1/Sheets/CMD162R23-sht-EAST-fdht-01.dgn

USER NAME = tmmroz	DESIGNED - JAP	REVISED - 1 01/30/2026	STATE OF ILLINOIS DEPARTMENT OF TRANSPORTATION	PAVEMENT JOINTING AND ELEVATION PLANS	F.A.I. RTE. 80 / SECTION FAI 80 21 STRUCTURE 2 / COUNTY WILL / TOTAL SHEETS 1230 / SHEET NO. 141
	DRAWN - TMM	REVISED -			CONTRACT NO. 62R23
PLOT SCALE = 40.000 ' / in.	CHECKED - JIR	REVISED -		SCALE: 1" = 20' / SHEET 1 OF 1 SHEETS / STA. TO STA.	ILLINOIS / FED. AID PROJECT
PLOT DATE = 1/28/2026	DATE - 11/7/2025	REVISED -			

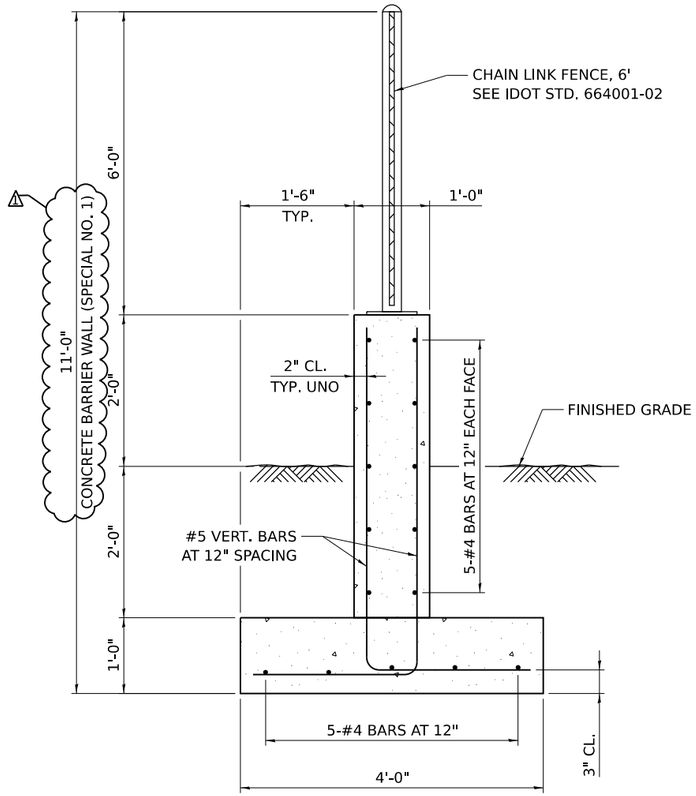

TYPICAL SECTION
CONCRETE BARRIER WALL (SPECIAL NO. 1)

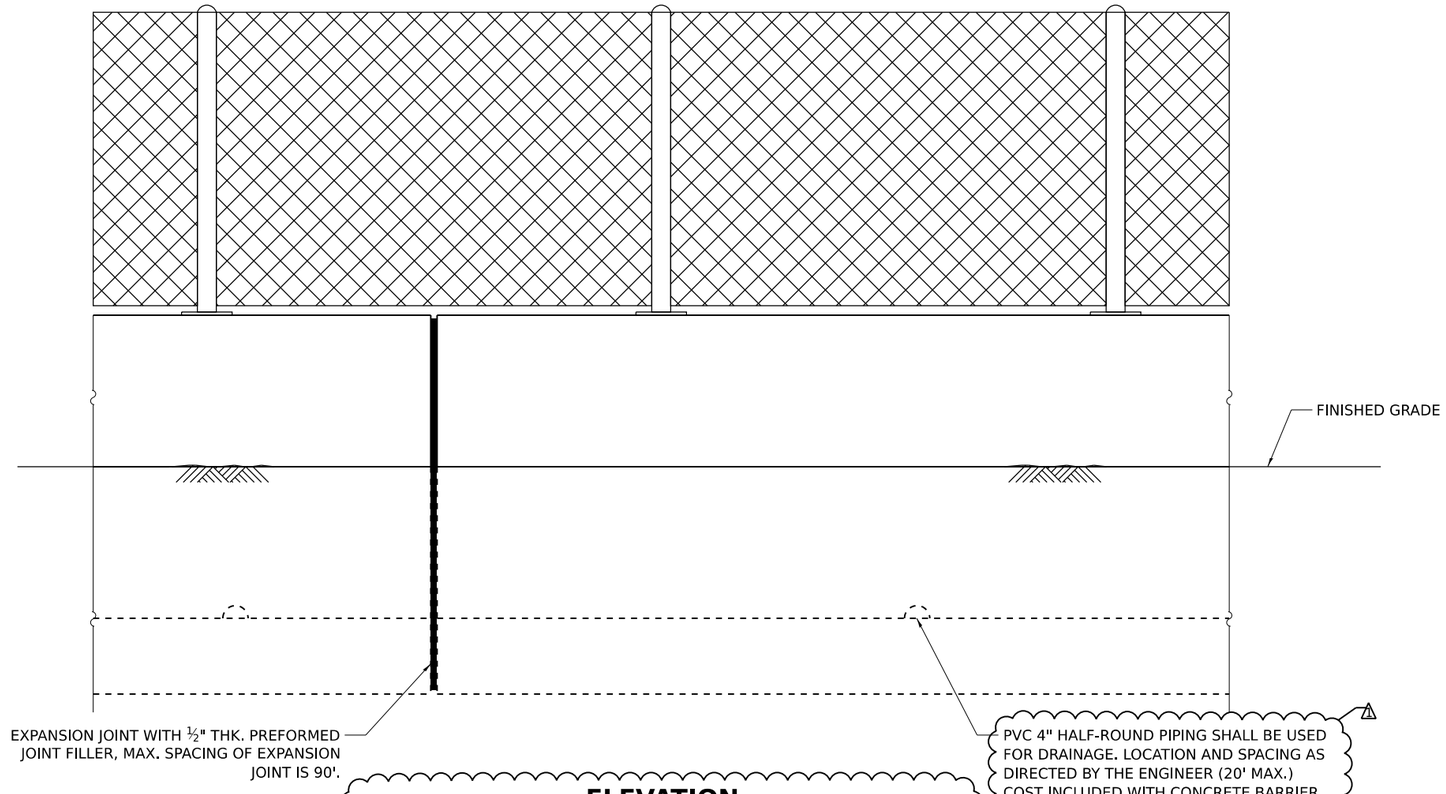

ELEVATION
CONCRETE BARRIER WALL (SPECIAL NO. 1)

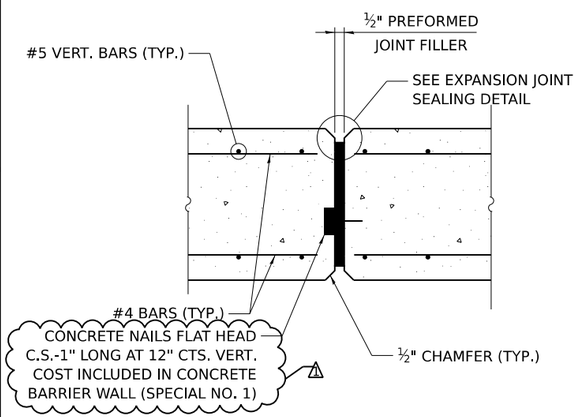

EXPANSION JOINT DETAIL

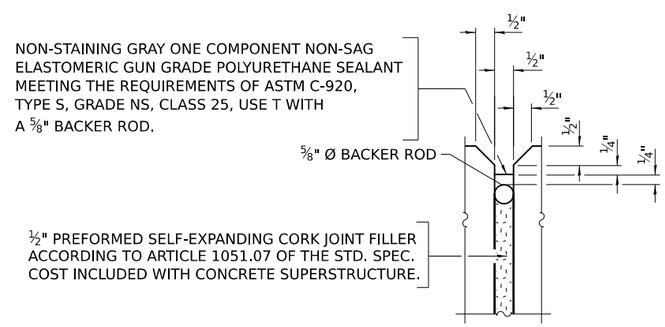

EXPANSION JOINT SEALING DETAIL

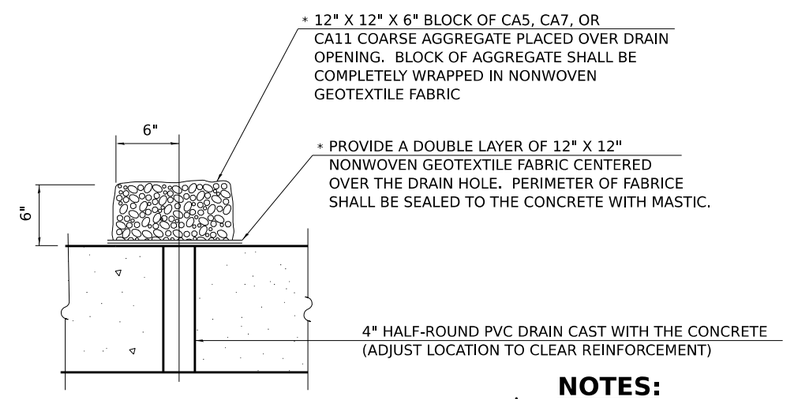

DRAIN DETAIL

*NONWOVEN GEOTEXTILE FABRIC SHALL CONFORM TO THE REQUIREMENTS OF ARTICLE 1080.01 OF THE STANDARD SPECIFICATIONS. THE MINIMUM WEIGHT OF THE FABRIC SHALL BE 6 OUNCES PER SQUARE YARD.

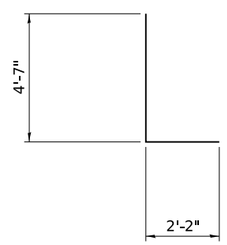

VERTICAL BARS

NOTES:

1. SEE ROADWAY PLANS FOR LIMITS OF CONCRETE BARRIER WALL (SPECIAL NO. 1).
2. CONCRETE BARRIER WALL (SPECIAL NO. 1) SHALL INCLUDE CONCRETE STRUCTURES, REINFORCEMENT BARS, EPOXY COATED, DRAINAGE ITEMS, PROTECTIVE COAT, AND CHAIN LINK FENCE.
3. CONCRETE: f'c = 3500 PSI (CLASS SI).
4. APPLY PROTECTIVE COAT TO TOP AND VERTICAL FACES OF STEM.

1 REVISED SHEET 2/4/2026

MODEL: Default
FILE NAME: pw://transystems-pw.bentley.com:transyscorp-pw1-hosted/Documents/Projects_2018/CH401/401180022/03-WSP/CAD/62R23-RB-1/Sheets/CM0162R23-sm-sneewallfencedetail.dgn

WSP USA Inc.
30 N. LASALLE STREET
SUITE 4200
CHICAGO, IL 60602
TEL: (312) 782-8150

USER NAME = donahuek1	DESIGNED - PJL	REVISED - 1 01/30/2026	
	DRAWN - PJL	REVISED -	
PLOT SCALE = 2:0.0001 ':' / in.	CHECKED - KSD	REVISED -	
PLOT DATE = 1/28/2026	DATE - 11/7/2025	REVISED -	

STATE OF ILLINOIS
DEPARTMENT OF TRANSPORTATION

ROADWAY DETAILS
CONCRETE BARRIER WALL (SPECIAL NO. 1)

SCALE: NTS | SHEET 2 OF 9 SHEETS | STA. | TO STA.

F.A.I. RTE.	SECTION	COUNTY	TOTAL SHEETS	SHEET NO.
80	FAI 80 21 STRUCTURE 2	WILL	1230	149
		CONTRACT NO. 62R23		
	ILLINOIS	FED. AID PROJECT		

THIS SHEET DELETED

DELETED ENTIRE SHEET 2/4/2026

MODEL: Default
FILE NAME: pw://transystems-pw.bentley.com:transyscorp-pw1-hosted/Documents/Projects_2018/CH401/401180022/03-WSP/CAD/62R23-RB-1/Sheets/CKMD162R23-sht-EAST-rdydetail01-FlaredWingRemoval/CHI.dgn

USER NAME = tmmroz	DESIGNED - JAP	REVISED -	01/30/2026	STATE OF ILLINOIS DEPARTMENT OF TRANSPORTATION	ROADWAY DETAILS FLARED WING REMOVAL
	DRAWN - TMM	REVISED -			
PLOT SCALE = 30.000 ' / in.	CHECKED - JIR	REVISED -			
PLOT DATE = 1/28/2026	DATE - 11/7/2025	REVISED -			SCALE: NTS SHEET 3 OF 7 SHEETS STA. TO STA.

F.A.I. RTE.	SECTION	COUNTY	TOTAL SHEETS	SHEET NO.
80	FAI 80 21 STRUCTURE 2	WILL	1230	152
		CONTRACT NO. 62R23		
		ILLINOIS	FED. AID PROJECT	

THIS SHEET DELETED

1 DELETED ENTIRE SHEET 2/4/2026

1

MODEL: Default
FILE NAME: pw://transystems-pw.bentley.com:transyscorp-pw1-hosted/Documents/Projects_2018/CH401/401180022/03-WSP/CAD/62R23-RB-1/Sheets/CMD162R23-sht-EAST-rdydetail02-FlaredWingRemoval/Gardner

USER NAME = tmmroz	DESIGNED - JAP	REVISED - 1 01/30/2026	STATE OF ILLINOIS DEPARTMENT OF TRANSPORTATION	ROADWAY DETAILS FLARED WING REMOVAL	
	DRAWN - TMM	REVISED -			
PLOT SCALE = 30.000 ' / in.	CHECKED - JIR	REVISED -			
PLOT DATE = 1/28/2026	DATE - 11/7/2025	REVISED -		SCALE: NTS SHEET 4 OF 7 SHEETS STA. TO STA.	

F.A.I. RTE.	SECTION	COUNTY	TOTAL SHEETS	SHEET NO.
80	FAI 80 21 STRUCTURE 2	WILL	1230	153
		CONTRACT NO. 62R23		
		ILLINOIS	FED. AID PROJECT	

THIS SHEET DELETED

1 DELETED ENTIRE SHEET 2/4/2026

MODEL: Default
FILE NAME: pw://transystems-pw.bentley.com:transyscorp-pw1-hosted/Documents/Projects_2018/CH401/401180022/03-WSP/CAD/62R23-RB-1/Sheets/CMD162R23-sht-EAST-rdydetail03-SingleFaceBarrier

USER NAME = tmmroz	DESIGNED - JAP	REVISED - 1 01/30/2026	STATE OF ILLINOIS DEPARTMENT OF TRANSPORTATION	ROADWAY DETAILS SINGLE FACE BARRIER	F.A.I. RTE. 80 / SECTION FAI 80 21 STRUCTURE 2 / COUNTY WILL / TOTAL SHEETS 1230 / SHEET NO. 154
	DRAWN - TMM	REVISED -			CONTRACT NO. 62R23
PLOT SCALE = 100.000 ' / in.	CHECKED - JIR	REVISED -			
PLOT DATE = 1/28/2026	DATE - 11/7/2025	REVISED -		SCALE: NTS / SHEET 5 OF 7 SHEETS / STA. / TO STA.	ILLINOIS FED. AID PROJECT

THIS SHEET DELETED

1 DELETED ENTIRE SHEET 2/4/2026

1

MODEL: Default
FILE NAME: pw://transystems-pw.bentley.com:transyscorp-pw1-hosted/Documents/Projects_2018/CH401/401180022/03-WSP/CAD/62R23-RB-1/Sheets/CMD162R23-sht-EAST-rdydetail03-ContractorAccess

USER NAME = tmmroz	DESIGNED - JAP	REVISED - 1 01/30/2026	STATE OF ILLINOIS DEPARTMENT OF TRANSPORTATION	ROADWAY DETAILS CONTRACTOR ACCESS	
	DRAWN - TMM	REVISED -			
PLOT SCALE = 10.000 ' / in.	CHECKED - JIR	REVISED -			
PLOT DATE = 1/28/2026	DATE - 11/7/2025	REVISED -		SCALE: NTS / SHEET 6 OF 7 SHEETS / STA. / TO STA.	

F.A.I. RTE.	SECTION	COUNTY	TOTAL SHEETS	SHEET NO.
80	FAI 80 21 STRUCTURE 2	WILL	1230	155
		CONTRACT NO. 62R23		
		ILLINOIS	FED. AID PROJECT	

THIS SHEET DELETED

1 REVISED ENTIRE SHEET 2/4/2026

1

MODEL: Default
FILE NAME: pw://transystems-pw.bentley.com:transyscorp-pw1-hosted/Documents/Projects_2018/CH401/401180022/03-WSP/CAD/62R23-RB-1/Sheets/CMD162R23-sht-EAST-rdydetail06-TCBConnection

USER NAME = tmmroz	DESIGNED - JAP	REVISED - 1 01/30/2026	STATE OF ILLINOIS DEPARTMENT OF TRANSPORTATION	ROADWAY DETAIL TEMPORARY CONCRETE BARRIER CONNECTION DETAIL	
	DRAWN - TMM	REVISED -			
PLOT SCALE = 100.000 ' / in.	CHECKED - JIR	REVISED -			
PLOT DATE = 1/28/2026	DATE - 11/7/2025	REVISED -		SCALE: NTS / SHEET 7 OF 7 SHEETS / STA. / TO STA.	

F.A.I. RTE.	SECTION	COUNTY	TOTAL SHEETS	SHEET NO.
80	FAI 80 21 STRUCTURE 2	WILL	1230	156
		CONTRACT NO. 62R23		
		ILLINOIS	FED. AID PROJECT	

SUGGESTED STAGES OF CONSTRUCTION AND TRAFFIC CONTROL GENERAL NOTES

1. THE CONTRACTOR IS RESPONSIBLE FOR COORDINATING AND PROVIDING ACCESS POINTS TO THE WORK ZONE. ACCESS POINTS MUST BE APPROVED BY THE ENGINEER PRIOR TO INSTALLATION AND MUST BE COMPLETED ACCORDING TO TC-18. ANY SIGNING OR ADDITIONAL TRAFFIC CONTROL DEVICES REQUIRED TO PROVIDE CONTRACTOR ACCESS TO THE WORK ZONE IS INCLUDED IN THE COST OF "TRAFFIC CONTROL AND PROTECTION (EXPRESSWAYS)" AND WILL NOT BE PAID FOR SEPARATELY. ACCOMMODATIONS AND PROVISIONS FOR ADDITIONAL ENTRANCES SHALL BE AT THE EXPENSE OF THE CONTRACTOR.

2. THE CONTRACTOR SHALL INSTALL AND MAINTAIN PROPOSED AND TEMPORARY DRAINAGE SYSTEMS AND EROSION CONTROL MEASURES DURING STAGE CONSTRUCTION THROUGHOUT THE DURATION OF THE CONTRACT. SEE TEMPORARY DRAINAGE AND EROSION CONTROL PLANS.

3. THE CONTRACTOR IS RESPONSIBLE FOR MAINTAINING POSITIVE DRAINAGE ON THE JOB SITE DURING CONSTRUCTION.

4. THE CONTRACTOR SHALL PERFORM PAVEMENT PATCHING AND REPAIRS ON THE DESIGNATED DETOUR ROUTES BEFORE AND AFTER DETOURS ARE IN SERVICE. THE LOCATION AND QUANTITIES SHALL BE APPROVED BY THE ENGINEER. THE CONTRACTOR SHALL REFER TO THE DETOUR PLANS FOR THE DESIGNATED DETOUR ROUTES. NOMINAL QUANTITIES OF THIS WORK HAVE BEEN INCLUDED AS PART OF THE CONTRACT.

5. ALL TEMPORARY PAVEMENT MARKINGS SHOWING DETERIORATION AFTER 7 DAYS SHALL BE REPLACED BY THE CONTRACTOR AS DIRECTED BY THE ENGINEER. SUFFICIENT QUANTITIES FOR ONE PLACEMENT AND ONE REPLACEMENT HAVE BEEN PROVIDED FOR EACH STAGE. ALL MARKINGS THAT REQUIRE REPLACEMENT AFTER THE FIRST REPLACEMENT SHALL BE REPLACED BY THE CONTRACTOR AT HIS/HER OWN EXPENSE.

6. TEMPORARY PAVEMENT CROSS SLOPES SHALL MATCH THE CROSS SLOPE OF THE ADJACENT EXISTING OR PROPOSED PAVEMENT UNLESS OTHERWISE DIRECTED BY THE ENGINEER OR AS OTHERWISE SHOWN ON THE PLANS.

7. THE CONTRACTOR SHALL REQUEST AND GAIN APPROVAL FROM THE ILLINOIS DEPARTMENT OF TRANSPORTATION'S EXPRESSWAY TRAFFIC OPERATIONS ENGINEER AT WWW.IDOT.COM TWENTY-FOUR (24) HOURS IN ADVANCE OF ALL DAILY LANE, RAMP, AND SHOULDER CLOSURES AND 7 DAYS IN ADVANCE OF ALL PERMANENT AND WEEKEND CLOSURES ON ALL FREEWAYS AND/OR EXPRESSWAYS IN DISTRICT ONE. THIS ADVANCE NOTIFICATION IS CALCULATED BASED ON A WORKWEEK OF MONDAY THROUGH FRIDAY AND SHALL NOT INCLUDE WEEKENDS OR HOLIDAYS.

8. THE CONTRACTOR SHALL CONTACT KALPANA KANNAH-HOSADURGA, THE DISTRICT ONE TRAFFIC CONTROL SUPERVISOR AT KALPANA.KANNAN-HOSADURGA@ILLINOIS.GOV A MINIMUM OF 72 HOURS IN ADVANCE OF BEGINNING WORK.

9. THE CONTRACTOR IS DIRECTED TO THE FACT THAT OTHER SEPARATE CONTRACTS ARE, OR MAY BE, IN FORCE THAT INTERSECT THE LIMITS OF THIS PROJECT. THE CONTRACTOR SHALL COOPERATE WITH THE OTHER CONTRACTORS IN THE PHASING AND PERFORMANCE OF THIS WORK SO AS NOT TO DELAY, INTERRUPT, OR HINDER THE PROGRESS OR COMPLETION OF THE WORK BEING PERFORMED BY OTHER CONTRACTORS. THE CONTRACTOR SHALL TAKE INTO CONSIDERATION THE REQUIREMENTS OUTLINED IN THE SPECIAL PROVISION "CONTRACTOR COOPERATION" WHEN WORKING WITH OTHER CONTRACTORS AND THE DEPARTMENT. NO ADDITIONAL COMPENSATION WILL BE ALLOWED FOR COMPLIANCE WITH THE ABOVE REQUIREMENTS, NOR FOR ANY DELAYS OR INCONVENIENCES RESULTING FROM THE ACTIVITIES OF OTHER CONTRACTORS. SHOULD A CONFLICT ARISE BETWEEN THE CONTRACTORS WITH RESPECT TO SEQUENCE OF CONSTRUCTION OR MAINTENANCE OF TRAFFIC REQUIREMENTS, SAID CONFLICTS SHALL BE RESOLVED BY, OR AT THE DIRECTION OF THE ENGINEER.

10. THE CONTRACTOR SHALL COORDINATE ALL LANE CLOSURES WITH ADJACENT CONTRACTS TO ENSURE CONSISTENCY AND AVOID TRAFFIC CONTROL CONFLICTS. THIS WORK SHALL BE APPROVED BY THE ENGINEER. THE CONTRACTOR SHALL COORDINATE WITH CONTRACTS 62R22 AND 62F94 PRIOR TO REMOVING OR INSTALLING ADVANCED WARNING SIGNS FOR STAGE CHANGES ON I-80 MAINLINE.

11. WORK IS TO BE PERFORMED IN ACCORDANCE WITH "KEEPING THE EXPRESSWAY OPEN TO TRAFFIC" AND PER STATE AND DISTRICT 1 HIGHWAY STANDARDS FOR TRAFFIC CONTROL. ALL TRAFFIC CONTROL DEVICES AND SIGNAGE REQUIRED ON I-80, CENTER STREET, CHICAGO STREET, AND RAMPS SHALL BE IN ACCORDANCE WITH APPLICABLE IDOT DISTRICT 1 STANDARDS, IDOT HIGHWAY STANDARDS, AND THE CONTRACT PLANS. THIS WORK SHALL BE INCLUDED IN THE COST FOR "TRAFFIC CONTROL AND PROTECTION (EXPRESSWAYS)" AND WILL NOT BE PAID FOR SEPARATELY.

12. LANE CLOSURES, RAMP CLOSURES, SIGNING, PAVEMENT MARKINGS, AND BARRICADE PLACEMENT SHALL BE IN ACCORDANCE WITH THE LATEST HIGHWAY STANDARD DRAWINGS AND IDOT DISTRICT 1 STANDARD DETAILS AS APPLICABLE.

13. EXISTING PAVEMENT MARKINGS THAT CONFLICT WITH TEMPORARY PAVEMENT MARKINGS SHALL BE REMOVED AS DIRECTED BY THE ENGINEER. THE REMOVAL WILL BE MEASURED IN SQUARE FEET AND PAID FOR AS "PAVEMENT MARKING REMOVAL - WATER BLASTING". GRINDING IS PROHIBITED ON ALL PAVEMENT NOT BEING REPLACED. FINAL PAVEMENT MARKINGS WILL BE INSTALLED AT THE END OF LAST STAGE, UNLESS OTHERWISE NOTED IN THE PLANS.

14. ANY EXISTING SIGNS DENOTED WITHIN THE PLAN SET THAT DO NOT APPLY TO THE REVISED TRAFFIC PATTERNS SHALL BE REMOVED OR COVERED AS DIRECTED BY THE ENGINEER. THE COVERING OR REMOVAL OF GROUND MOUNTED/OVERHEAD SIGNS SHALL BE NON-DESTRUCTIVE IN NATURE AND WILL NOT BE MEASURED FOR PAYMENT BUT IS CONSIDERED INCLUDED IN THE CONTRACT UNIT PRICE FOR "TRAFFIC CONTROL AND PROTECTION (EXPRESSWAYS)" WHEN ON EXPRESSWAYS.

15. FOR I-80 AND RAMPS, THE CONTRACTOR WILL BE REQUIRED TO SET LANE CLOSURES IN ACCORDANCE WITH THE LATEST EDITION OF THE ILLINOIS HIGHWAY STANDARDS 701400, 701401 and 701428. FOR TRAFFIC CONTROL, INCLUDING BUT NOT LIMITED TO ALL APPLICABLE DISTRICT STANDARD DETAILS TC-08, TC-09, TC-10, TC-16, TC-17, TC-18, TC-22, TC-23 AND TC-33.

16. CHANGEABLE MESSAGE SIGNS SHALL BE INSTALLED TWO WEEKS PRIOR TO ALL ROAD CLOSURE, TRAFFIC STAGE CHANGES, AND NEW TRAFFIC SIGNAL TURN-ON EVENTS ON EACH APPROACH OF THE EFFECTED ROADWAY TO WARN MOTORISTS OF THE UPCOMING EVENT. THE SIGNS SHALL BE REMOVED TWO WEEKS THEREAFTER UNLESS THE SIGNS ARE NEEDED AGAIN FOR A SUBSEQUENT FUTURE EVENT THAT WILL OCCUR WITHIN 2 WEEKS ON THE SAME APPROACH OF THE EFFECTED ROADWAY. THE SIGN LOCATIONS SHALL BE (DETERMINED BY THE ENGINEER) PLACED AS DIRECTED BY THE ENGINEER.

17. MOVING OPERATIONS ALONG I-80 PER STATE STANDARD 701426 WILL NOT BE PERMITTED.

18. THE ANNUAL INSPECTION OF THE I-80 OVER DES PLAINES RIVER BRIDGES WILL BE PERFORMED BY IDOT OR ITS CONSULTANT IN MAY OF EACH YEAR. CONTRACT 62R22 SHALL MAKE MOT MODIFICATIONS TO ACCOMMODATE THE SCHEDULED INSPECTION AND PROVIDE THE NECESSARY DAILY LANE CLOSURES FOR THE INSPECTION OF BOTH WB AND EB DIRECTIONS. THE COST FOR COORDINATION AND MODIFICATIONS REQUIRED TO MOT SHALL BE INCLUDED IN THE COST OF "TRAFFIC CONTROL AND PROTECTION (EXPRESSWAYS)".

19. THE CONTRACTOR SHALL VIDEO THE EXISTING CONDITIONS OF THE LOCAL STREETS IMPACTED BY CONSTRUCTION AND DETOURS TO DETERMINE REPAIRS NEEDED POST CONSTUCTION. THE REPAIRS SHALL BE DIRECTED BY THE ENGINEER. THE WORK WILL BE PAID FOR AS "PRECONSTRUCTION VISUAL RECORDING".

20. STATE OWNED TEMPORARY CONCRETE BARRIER WALL IS LOCATED WITHIN THE PROJECT LIMITS AT THE START OF CONSTRUCTION. THIS BARRIER WALL IS TO REMAIN, HOWEVER THE CONTRACTOR IS RESPONSIBLE FOR MAINTAINING THIS WALL UTILIZING THE PAY ITEMS WITHIN THIS CONTRACT.

21. ALL EXISTING 8" (1.5" BLACK, 4" WHITE, 1.5" BLACK) ON I-80 PREFORMED PLASTIC TYPE B STANDARD LANE LINE PAVEMENT MARKINGS AND RAISED REFLECTIVE PAVEMENT MARKER REFLECTORS LOCATED WITHIN TEMPORARY LANE CLOSURE TAPERS, LANE SHIFT TAPERS OR IN LOCATIONS THAT CONFLICT WITH THE TEMPORARY PAVEMENT MARKING TAPE USED FOR STAGING SHALL BE REMOVED IF THE STAGING WILL REMAIN IN PLACE FOR MORE THAN 14 DAYS. THE EXISTING 7" (1.5" BLACK, 4" WHITE, 1.5" BLACK) PREFORMED PLASTIC TYPE B STANDARD PAVEMENT MARKINGS AND RAISED REFLECTIVE PAVEMENT MARKER REFLECTORS THAT WERE REMOVED SHALL BE RESTORED AFTER THE COMPLETION OF THE STAGING.

22. PAVEMENT MARKING TAPE, TYPE IV SHOWN ON THE PLANS FOR ANY CONSTRUCTION STAGE ON LOCAL ROADS THAT THE CONTRACTOR PROPOSES TO EXTEND OVER THE WINTER PERIOD SHALL BE MODIFIED URETHANE PAVEMENT MARKING AND WILL BE PAID FOR THEIR RESPECTIVE CONTRACT UNIT PRICE. TEMPORARY PAVEMENT MARKINGS ON I-80 AND RAMPS SHALL BE TEMPORARY PAVEMENT MARKING - EPOXY. TEMPORARY PAVEMENT MARKINGS ON ARTERIAL ROADS SHALL BE TEMPORARY PAVEMENT MARKING - TYPE IV TAPE UNLESS USED DURING THE WINTER. IF TEMPORARY PAVEMENT MARKING ALONG ARTERIAL ROADS IS USED DURING THE WINTER, THE TEMPORARY PAVEMENT MARKING SHALL BE TEMPORARY PAVEMENT MARKING - EPOXY. PRIOR TO PLACING TEMPORARY PAVEMENT MARKING ON ARTERIAL ROADS, THE CONTRACTOR SHALL VERIFY THE PAVEMENT MARKING MATERIAL WITH THE ENGINEER.

23. THE "ROAD CONSTRUCTION AHEAD" SIGNS SHALL REMAIN INSTALLED UNTIL THE COMPLETION OF THE PROJECT OR WHEN NO ROADWAY HAZARDS REMAIN WITHIN THE WORK ZONE.

24. THE RESIDENT ENGINEER SHALL CONTACT THE PACE BUS TRANSPORTATION ENGINEER AT TRANSPORTATION.ENGINEER@PACEBUS.COM ONE (1) WEEK IN ADVANCE OF ALL STAGE CHANGES.

25. WHEN MOT SIGNING ALONG CHICAGO STREET, SOUTH OF PATTERSON ROAD, ARE IN CONFLICT WITH EXISTING RETAINING WALLS, THE SIGNS SHALL BE PLACED ON TOP OF THE RETAINING WALL WITH SHORTER POSTS TO THE SATISFACTION OF THE ENGINEER. SHRUBS AND OVERHANGING LIMBS SHALL BE CLEARED AS NECESSARY TO NOT OBSTRUCT THE VIEW OF THE MOT SIGNING. NO ADDITIONAL COMPENSATION WILL BE MADE FOR THIS WORK BUT SHALL BE INCLUDED IN THE COST OF THE APPLICABLE TRAFFIC CONTROL PAY ITEMS.

26. THE DEPTH OF THE TEMPORARY PAVEMENT ALONG CHICAGO STREET MAY BE REDUCED TO MATCH THE DEPTH OF THE EXISTING PAVEMENT WITH THE APPROVAL OF THE ENGINEER. THIS APPLIES TO BOTH HOT-MIX ASPHALT AND PORTLAND CEMENT PAVEMENT OPTIONS. THE MINIMUM TEMPORARY PAVEMENT THICKNESS SHALL BE 8". FOR HOT -MIX ASPHALT PAVEMENT, ANY REDUCTION IN TOTAL PAVEMENT THICKNESS SHALL BE MADE BY REDUCING THE BINDER COURSE ONLY. THE SURFACE COURSE SHALL REMAIN AT THE PROPOSED THICKNESS.

27. TEMPORARY CONCRETE BARRIER SHALL BE CONTINUOUSLY PINNED ALONG THE TRAFFIC SIDE WHERE A HAZARD EXISTS WITHIN 2 FEET BEHIND THE TEMPORARY CONCRETE BARRIER; THE BARRIER SHALL BE ANCHORED TO THE PAVEMENT. PINNING ON THE NEW BRIDGE DECK OR THE EXISTING BRIDGE DECK TO REMAIN SHALL BE AVOIDED. ANY CRC REBAR IN CONFLICT WITH THE BARRIER WALL PINNING WILL NEED TO BE LANCED AT THE EXPENSE OF THE CONTRACTOR.

28. ALL EXISTING LANE LINE PAVEMENT MARKINGS AND RAISED REFLECTIVE PAVEMENT MARKERS REFLECTORS LOCATED WITHIN TEMPORARY LANE CLOSURE TAPERS, LANE SHIFT TAPERS OR IN LOCATIONS THAT CONFLICT WITH THE TEMPORARY PAVEMENT MARKING TAPE USED FOR STAGING SHALL BE REMOVED VIA WATER BLASTING WITH VACUUM RECOVERY IF THE STAGING WILL REMAIN IN PLACE FOR MORE THAN 14 DAYS.

29. LANE CLOSURES, RAMP CLOSURES, SIGNING, PAVEMENT MARKINGS, AND BARRICADE PLACEMENT FOR THE I-80 OVER DES PLAINES RIVER BRIDGES MAINTENANCE PATCHING SHALL BE IN ACCORDANCE WITH THE LATEST HIGHWAY STANDARD DRAWINGS AND IDOT DISTRICT 1 STANDARD DETAILS AS APPLICABLE. THE COST FOR INSTALLATION AND REMOVAL OF DAILY LANE CLOSURES SHALL BE INCLUDED IN THE COST OF "TRAFFIC CONTROL AND PROTECTION (EXPRESSWAYS)".

30. THE CONTRACTOR SHALL USE CAUTION WHILE ANCHORING TEMPORARY CONCRETE BARRIER WALL AND TEMPORARY IMPACT ATTENUATORS ON THE EXISTING BARRIER BASE BETWEEN STATION 723+31 AND 727+80 SINCE THERE IS EXISTING 4" CONDUIT LOCATED WITHIN THE BARRIER BASE.

31. THE PAY ITEM "BARRIER WALL REFLECTORS, TYPE C" IS INTENDED SOLELY TO BE USED FOR REFLECTOR APPLICATIONS ON PERMANENT AND EXISTING CONCRETE BARRIER AND IS NOT TO BE USED FOR TEMPORARY CONRETE BARRIER WHERE THE TYPE C REFLECTOR IS CONSIDERED INCLUDED IN THE COST OF THE TEMPORARY CONCRETE BARRIER PER HIGHWAY STANDARD 704001.

32. ALL LOCAL ROAD WARNING SIGNS SHALL BE PLACED 200' IN ADVANCE OF THE INTERSECTION OR AT THE NEAREST PRACTICAL LOCATION PER TC-10. WHERE WIDTH RESTRICTIONS APPLY, REFER TO THE WIDTH RESTRICTION DETAIL FOR REQUIRED SIGNAGE. IN SUCH CASES, THE "ROAD CONSTRUCTION AHEAD" SIGN SHALL BE PLACED 200' IN ADVANCE OF THE WIDTH RESTRICTION SIGNAGE."

33. THE SUGGESTED MAINTENANCE OF TRAFFIC (MOT) PLANS ARE INTENDED TO SERVE AS A GUILDELINE FOR THE SAFE AND EFFICIENT DIVERSION OF TRAFFIC THROUGHOUT THE EXECUTION OF THIS CONTRACT. THE CONTRACTOR MAY REQUEST ADJUSTMENTS TO THE MOT PLANS TO ACCOMMODATE CONSTRUCTION REQUIREMENTS, PROVIDED THAT SUCH MODIFICATIONS DO NOT COMPROMISE PUBLIC SAFETY OR CONVENIENCE. ANY PROPOSED CHANGES TO THE MOT PLANS MUST BE SUBMITTED TO THE ENGINEER FOR REVIEW AND APPROVAL AT LEAST 30 DAYS BEFORE IMPLEMENTING THE CHANGE.

34. THE CONTRACTOR SHALL BE AWARE THAT THE CONSTRUCTION SEQUENCING SHEET PROVIDES THE MOST CURRENT INFORMATION OF THE PROPOSED TRAFFIC CONTROL AND DESCRIPTION OF WORK TO BE PERFORMED RELATING THE CONTRACTOR COMPLETION DATES FOR EACH STAGE. THE DEPARTMENT MAY DIRECT THE CONTRACTORS TO IMPLEMENT AN ALTERNATE MOT PLAN WHICH WILL BE PROVIDED IN A FUTURE CONSTRUCTION REVISION.

1 REVISED ENTIRE SHEET 2/4/2026

CONSTRUCTION SEQUENCING

STAGE 1

PROPOSED TRAFFIC CONTROL:
EB I-80 ON DES PLAINES RIVER BRIDGES: MAINTAIN EXISTING TRAFFIC AND LANE CONFIGURATION; EB AUX LANE TO EXIT ONLY
WB I-80 ON DES PLAINES RIVER BRIDGES: CONTINUE TRAFFIC CONTROL FROM 62F94 PRESTAGE B/C TO MAINTAIN TWO WB THRU LANES ON EXIST BRIDGE; CHICAGO RAMP AC MERGE ONTO WB LANE 2; CLOSE WB AUX LANE

EXIT RAMPS CLOSED TO TRAFFIC: EX WB I-80 TO CENTER STREET (SEE DETOUR PLANS)

DESCRIPTION OF WORK TO BE PERFORMED:
NONE

STAGE 2A

PROPOSED TRAFFIC CONTROL:

EB & WB I-80 ON DES PLAINES RIVER BRIDGES: MAINTAIN TRAFFIC FROM PREVIOUS STAGE

EXIT RAMPS CLOSED TO TRAFFIC: EX WB I-80 TO CENTER STREET (SEE DETOUR PLANS)

DESCRIPTION OF WORK TO BE PERFORMED:

CONSTRUCT PROP WB & EB DES PLAINES RIVER BRIDGE OFFLINE.
CONSTRUCT PORTIONS OF PROP EB DES PLAINES RIVER BRIDGE OFFLINE AS INDICATED ON THE PLANS.
CONSTRUCT COMPENSATORY STORAGE ALONG US-6 AND RECONSTRUCT SB PAVEMENT

STAGE 2B

PROPOSED TRAFFIC CONTROL:

EB & WB I-80 ON DES PLAINES RIVER BRIDGES: MAINTAIN TRAFFIC FROM PREVIOUS STAGE

EXIT RAMPS CLOSED TO TRAFFIC: EX WB I-80 TO CENTER STREET (SEE DETOUR PLANS)

ENTRANCE RAMPS CLOSED TO TRAFFIC: EX CHICAGO TO WB I-80 (SEE DETOUR PLANS)

DESCRIPTION OF WORK TO BE PERFORMED:

SAME AS STAGE 2A

CITY UTILITIES WORK SHALL BE COMPLETED IN THIS STAGE.

STAGE 3

PROPOSED TRAFFIC CONTROL:

EB I-80 ON EB DES PLAINES RIVER BRIDGE: MAINTAIN EXISTING TRAFFIC FROM PREVIOUS STAGE

WB I-80 ON WB DES PLAINES RIVER BRIDGE: MAINTAIN 2 LANES OF WB TRAFFIC ON EXIST BRIDGE, WB AUX LANE IS CLOSED
EXIT RAMPS CLOSED TO TRAFFIC: EX WB I-80 TO CENTER STREET (SEE DETOUR PLANS)

ENTRANCE RAMPS CLOSED TO TRAFFIC: EX CHICAGO TO WB I-80 (SEE DETOUR PLANS)

DESCRIPTION OF WORK TO BE PERFORMED:

DES PLAINES RIVER BRIDGE:
CONTINUE TO CONSTRUCT PROP WB DES PLAINES RIVER BRIDGE OFFLINE. WB DES PLAINES RIVER BRIDGE MUST BE COMPLETED IN THIS STAGE.

CONSTRUCT PORTIONS OF PROP EB DES PLAINES RIVER BRIDGE OFFLINE AS INDICATED ON THE PLANS.

STAGE 4

PROPOSED TRAFFIC CONTROL:

EB I-80 ON EB DES PLAINES RIVER BRIDGE: MAINTAIN EXISTING TRAFFIC FROM PREVIOUS STAGE

WB I-80 ON WB DES PLAINES RIVER BRIDGE: SHIFT TWO LANES OF WB I-80 TRAFFIC TO THE OUTSIDE LANES OF THE PROP WB DES PLAINES RIVER BRIDGE;

AUX LANE AND WB I-80 EXIT & ENTRANCE RAMPS ARE OPEN TO TRAFFIC

DESCRIPTION OF WORK TO BE PERFORMED:

DES PLAINES RIVER BRIDGE:
CONTINUE CONSTRUCTING PORTIONS OF PROP EB DES PLAINES RIVER BRIDGE OFFLINE

STAGE 5

PROPOSED TRAFFIC CONTROL:

EB I-80 ON EB DES PLAINES RIVER BRIDGE: SHIFT TWO LANES OF EB TRAFFIC TO THE INSIDE LANES OF THE PROP WB DES PLAINES RIVER BRIDGE

WB I-80 ON WB DES PLAINES RIVER BRIDGE: CONTINUE TO MAINTAIN TWO LANES OF WB TRAFFIC ON THE OUTSIDE LANES OF PROP WB DES PLAINES RIVER BRIDGE;

SEPARATE WB TRAFFIC FROM EB TRAFFIC USING TEMPORARY CONCRETE BARRIER WITH GLARE SCREEN;

AUX LANE AND WB I-80 EXIT & ENTRANCE RAMPS ARE OPEN TO TRAFFIC

RAMPS CLOSED TO TRAFFIC: EX CENTER STREET TO EB I-80 ENTRANCE RAMP (SEE DETOUR PLANS)
EX EB I-80 TO CHICAGO STREET EXIT RAMP (SEE DETOUR PLANS)

DESCRIPTION OF WORK TO BE PERFORMED:

COMPLETING SUPERSTRUCTURE WORK ON PROP EB DES PLAINES RIVER BRIDGE

STAGE 6

PROPOSED TRAFFIC CONTROL:

EB I-80 ON EB DES PLAINES RIVER BRIDGE: OPEN ALL LANES TO PROPOSED LANE CONFIGURATION

WB I-80 ON WB DES PLAINES RIVER BRIDGE: OPEN ALL LANES TO PROPOSED LANE CONFIGURATION

ALL RAMPS ARE OPEN TO TRAFFIC

DESCRIPTION OF WORK TO BE PERFORMED:

NONE

1 REVISED ENTIRE SHEET 2/4/2026

LOCAL ROADS CONSTRUCTION SEQUENCE

LOCAL ROADS

ALL CITY UTILITY WORK WITHIN THE LIMITS OF LOCAL ROADS IMPROVEMENTS SHALL BE COMPLETED PRIOR TO ANY PROPOSED LOCAL ROADWAY WORK.

CONSTRUCTION STAGING FOR LOCAL ROADS IS INDEPENDENT FROM I-80 MAINLINE. THE CONTRACTOR IS RESPONSIBLE TO DETERMINE WHEN TO PERFORM ROADWAY WORK ON LOCAL ROADS AND BE APPROVED BY THE ENGINEER. SEE NOTES BELOW FOR SPECIFIC TIME RESTRICTION.

MAINTENANCE OF PEDESTRIANS AT SIDEWALKS SHALL BE IN ACCORDANCE WITH IDOT HIGHWAY STANDARD 701801.

CHERRY STREET:

RESURFACE THE ENTRANCE TO CHERRY STREET OFF US ROUTE 6.
TRAFFIC CONTROL SHALL BE IN ACCORDANCE WITH IDOT HIGHWAY STANDARD 701501 AND TC-23.
CONTRACTOR TO MAINTAIN ACCESS FOR LOCAL TRAFFIC ENTERING THE NEIGHBORHOOD AND TAKE PRECAUTIONS TO NOT OBSTRUCT RAILROAD CROSSING.

JOLIET STREET-SOUTH :

CONSTRUCTION OF CUL-DE-SAC ON JOLIET STREET SOUTH OF THE PROPOSED I-80 BRIDGE.
ROADWAY TO BE CLOSED FOR LOCAL TRAFFIC ONLY.
CONTRACTOR SHALL SCHEDULE WORK TO MINIMIZE CLOSURE OF RESIDENTIAL DRIVEWAYS AND TO COORDINATE WITH PROPERTY OWNERS.

JOLIET STREET-NORTH :

CONSTRUCTION OF CUL-DE-SAC ON JOLIET STREET NORTH OF THE PROPOSED I-80 BRIDGE.
ROADWAY TO BE CLOSED FOR LOCAL TRAFFIC ONLY.
CONTRACTOR SHALL SCHEDULE WORK TO MINIMIZE CLOSURE OF RESIDENTIAL DRIVEWAYS AND TO COORDINATE WITH PROPERTY OWNERS.

LUCAS STREET :

NEW CONSTRUCTION ON LUCAS STREET WILL EXTEND THE ROADWAY TO CONNECT WITH WATER STREET.
ROADWAY TO BE CLOSED FOR LOCAL TRAFFIC ONLY.
CONTRACTOR SHALL SCHEDULE WORK TO MINIMIZE CLOSURE OF RESIDENTIAL DRIVEWAYS AND TO COORDINATE WITH PROPERTY OWNERS.

WATER STREET :

RESURFACING ALONG WATER STREET FROM DES PLAINS STREET TO LUCAS STREET.
TRAFFIC CONTROL SHALL BE IN ACCORDANCE WITH IDOT HIGHWAY STANDARD 701501.

RIVER STREET :

NEW CONSTRUCTION ON RIVER STREET WILL EXTEND THE ROAD TO CONNECT WITH LUCAS STREET FROM 104+25.31 TO 112+17.00.
RESURFACING ALONG RIVER STREET FROM DAVIS STREET 100+50.00 TO PROPOSED CONSTRUCTION LIMIT AT 104+25.31.

TRAFFIC CONTROL FOR RESURFACING WORK SHALL BE IN ACCORDANCE WITH IDOT HIGHWAY STANDARD 701501.
BOTH LUCAS STREET AND RIVER STREET TO BE CLOSED FOR LOCAL TRAFFIC ONLY.
SEE DETOUR PLAN FOR MORE INFORMATION.
CONTRACTOR SHALL SCHEDULE WORK TO MINIMIZE CLOSURE OF RESIDENTIAL DRIVEWAYS AND TO COORDINATE WITH PROPERTY OWNERS.

US-6 :

PIER CONSTRUCTION: CONSTRUCTION OF PIERS 1 OF I-80 OVER DES PLAINES RIVER BRIDGE ALONG SB US-6 DURING STAGE 2 OF 62R22 AND 62R23, BUT NOT AT THE SAME TIME AS COMPENSATORY STORAGE CONSTRUCTION ALONG US-6.

LANE REDUCTION, MAINTAIN ONE LANE IN EACH BOUND ON EXISTING NB US-6.
MAINTAIN ACCESS TO CHERRY STREET DURING PIER CONSTRUCTION.

COMP STORAGE : COMPENSATORY STORAGE SHALL BE CONSTRUCTED DURING STAGE 2 OF 62R22 AND 62R23, BUT NOT AT THE SAME TIME AS THE PROPOSED DES PLAINES RIVER BRIDGE PIER 1 CONSTRUCTION.

CONSTRUCT COMPENSATORY STORAGE ALONG SB US-6 AND RECONSTRUCT SB PAVEMENT.
LANE REDUCTION, MAINTAIN ONE LANE IN EACH BOUND ON EXISTING NB US-6.

RESURFACING US-6: RESURFACING SHALL BEGIN AFTER PIER WORKS IS COMPLETED.
TRAFFIC CONTROL FOR RESURFACING WORK SHALL BE IN ACCORDANCE WITH IDOT HIGHWAY STANDARD 701606-10.

1 REVISED ENTIRE SHEET 2/4/2026

THIS SHEET DELETED

1 DELETED ENTIRE SHEET 2/4/2026

MODEL: Default
FILE NAME: pw://transystems-pw.bentley.com:transyscorp-pw1-hosted/Documents/Projects_2018/CH401/401180022/03-WSP/CAD/62R23-RB-1/Sheets/CMD162R23-cht-EAST-ATB-temp-01

USER NAME = tmmroz	DESIGNED - JAP	REVISED - 1 01/30/2026	STATE OF ILLINOIS DEPARTMENT OF TRANSPORTATION	TEMPORARY RAMP ALIGNMENT TEMPORARY CHICAGO RAMP A AND C	F.A.I. RTE. 80 / SECTION FAI 80 21 STRUCTURE 2 / COUNTY WILL / TOTAL SHEETS 1230 / SHEET NO. 165
	DRAWN - TMM	REVISED -			CONTRACT NO. 62R23
PLOT SCALE = 200.000 ' / in.	CHECKED - JIR	REVISED -		SCALE: 1" = 100' / SHEET 1 OF 1 SHEETS / STA. TO STA.	ILLINOIS FED. AID PROJECT
PLOT DATE = 1/28/2026	DATE - 11/7/2025	REVISED -			

THIS SHEET DELETED

1 DELETED ENTIRE SHEET 2/4/2026

1

MODEL: east-rampA-profile-1 - Profile 2 [Sheet]
FILE NAME: pw://transystems-pw.bentley.com:transyscorp-pw1-hosted/Documents/Projects_2018/CH401/401180022/03-WSP/CAD/62R23-RB-1/3D/EAST/D162R23-EAST-align-rampA-temp.dgn

USER NAME = tmmroz	DESIGNED - JAP	REVISED - 1 01/30/2026	STATE OF ILLINOIS DEPARTMENT OF TRANSPORTATION	TEMPORARY ROADWAY PROFILE CHICAGO STREET RAMP A	
	DRAWN - TMM	REVISED -			
PLOT SCALE = 0.16666667 ' / in.	CHECKED - JIR	REVISED -			
PLOT DATE = 1/28/2026	DATE - 11/7/2025	REVISED -		SCALE: 50H:5V	SHEET 1 OF 1 SHEETS STA. TO STA.

F.A.I. RTE.	SECTION	COUNTY	TOTAL SHEETS	SHEET NO.
80	FAI 80 21 STRUCTURE 2	WILL	1230	166
		CONTRACT NO. 62R23		
		ILLINOIS	FED. AID PROJECT	

THIS SHEET DELETED

1 DELETED ENTIRE SHEET 2/4/2026 1

MODEL: temp-rampC-alt - Profile 1 [Sheet]
FILE NAME: pw://transystems-pw.bentley.com:transyscorp-pw1-hosted/Documents/Projects_2018/CH401/401180022/03-WSP/CAD/62R23-RB-1/3D/EAST/D162R23-EAST-align-rampC-temp.dgn

USER NAME = tmmroz	DESIGNED - JAP	REVISED - 1 01/30/2026	STATE OF ILLINOIS DEPARTMENT OF TRANSPORTATION	TEMPORARY ROADWAY PROFILE CHICAGO STREET RAMP C	F.A.I. RTE. 80 / SECTION FAI 80 21 STRUCTURE 2 / COUNTY WILL / TOTAL SHEETS 1230 / SHEET NO. 167
	DRAWN - TMM	REVISED -			CONTRACT NO. 62R23
PLOT SCALE = 0.16666667 ' / in.	CHECKED - JIR	REVISED -			
PLOT DATE = 1/28/2026	DATE - 11/7/2025	REVISED -		SCALE: 50H:5V / SHEET 1 OF 1 SHEETS / STA. TO STA.	ILLINOIS FED. AID PROJECT

THIS SHEET DELETED

1 DELETED ENTIRE SHEET 2/4/2026

1

MODEL: Default
FILE NAME: pw://transystems-pw.bentley.com:transyscorp-pw1-hosted/Documents/Projects_2018/CH401180022/03-WSP/CAD/62R23-RB-1/Sheets/CWM0162R23-sht-EAST-MOT-det-wdthrestrict

USER NAME = tmmroz	DESIGNED - JAP	REVISED - 1 01/30/2026	STATE OF ILLINOIS DEPARTMENT OF TRANSPORTATION	SUGGESTED STAGES OF CONSTRUCTION AND TRAFFIC CONTROL WIDTH RESTRICTION ADVANCED SIGNING DETAIL	
	DRAWN - TMM	REVISED -			
PLOT SCALE = 100.000 ' / in.	CHECKED - JIR	REVISED -			
PLOT DATE = 1/28/2026	DATE - 11/7/2025	REVISED -		SCALE: NTS SHEET 1 OF 1 SHEETS STA. TO STA.	

F.A.I. RTE.	SECTION	COUNTY	TOTAL SHEETS	SHEET NO.
80	FAI 80 21 STRUCTURE 2	WILL	1230	168
		CONTRACT NO. 62R23		
		ILLINOIS	FED. AID PROJECT	

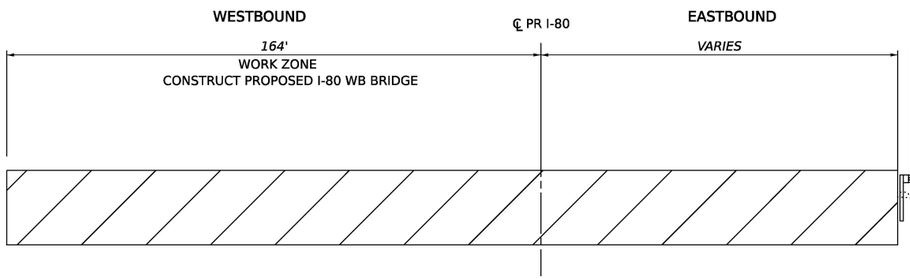

I-80 PR DES PLAINES RIVER BRIDGE MOT TYPICAL SECTION (STAGE 2)

PR STA TO 37+89.00 TO 60+04.87

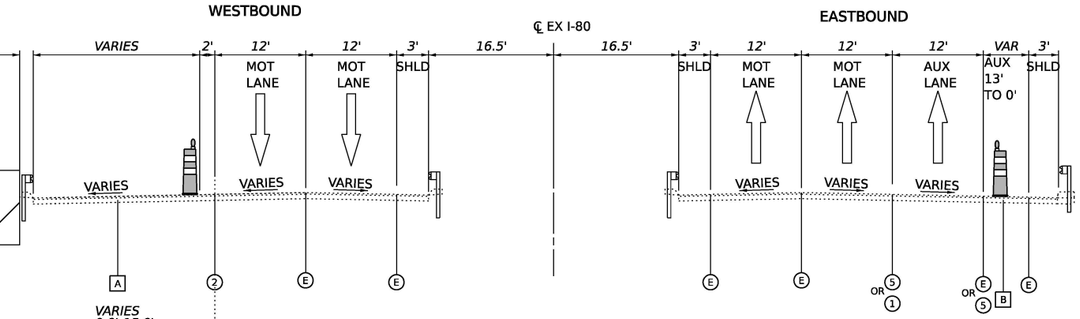

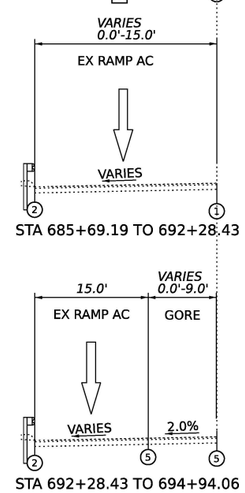

I-80 EX DES PLAINES RIVER BRIDGE MOT TYPICAL SECTION (STAGE 2)

EX STA TO 671+75.84 TO 694+94.06

A STA 671+75.84 TO 693+01.56

B STA 671+75.84 TO 674+91.36

LEGEND

- E EXISTING PAVEMENT MARKING
- P PERMANENT PAVEMENT MARKING
- R PAVEMENT MARKING REMOVAL
- 1 TEMP PVT MK - LINE 8" - EPOXY: 9' SKIP, 3' DASH WHITE
- 2 TEMP PVT MK - LINE 4" - EPOXY: SOLID WHITE
- 3 TEMP PVT MK - LINE 4" - EPOXY: SOLID YELLOW
- 4 TEMP PVT MK - LINE 5" - EPOXY: 30' SKIP, 10' DASH WHITE
- 5 TEMP PVT MK - LINE 8" - EPOXY: SOLID WHITE
- 6 TEMP PVT MK - LINE 12" - EPOXY: SOLID WHITE
- 7 TEMP PVT MK - LINE 6" - EPOXY: SOLID WHITE
- 8 TEMP PVT MK - LINE 4" - EPOXY: SOLID DOUBLE YELLOW
- 9 TEMP PVT MK - LINE 4" - EPOXY: 30' SKIP, 10' DASH WHITE
- 10 TEMP PVT MK - LINE 24" - EPOXY: SOLID WHITE
- 11 TEMP PVT MK - LINE 12" - EPOXY: YELLOW 45° DIAGONALS @ 75' SPACING INTERVALS
- 12 TEMP PVT MK - LINE 4" - EPOXY: WHITE 45° DIAGONALS

WORK ZONE

TEMPORARY PAVEMENT (ACTIVELY CONSTRUCTING)

TEMPORARY PAVEMENT (PREVIOUSLY CONSTRUCTED)

TYPE II BARRICADE OR DRUM @ 100 FT C-C ALONG ROADWAY (TANGENT), 50 FT C-C ALONG TAPERS AND RAMPS

TEMPORARY CONCRETE BARRIER WITH TYPE C REFLECTORS AND ANCHOR PER STANDARDS 704001 AND 782006

TEMPORARY CONCRETE BARRIER WITH GLARE SCREEN

EXISTING GUARDRAIL

* FROM PREVIOUS STAGE

NOTES:

1. TRAFFIC CONTROL PLANS SHOW HMA TEMPORARY PAVEMENT OPTION AS VISUAL ONLY. SEE ROADWAY TYPICAL SECTIONS FOR TEMPORARY PAVEMENT STRUCTURE OPTIONS.

1 ADDED ENTIRE SHEET 1/4/2026

MODEL: Default
FILE NAME: pw://transystems-pw.bentley.com:transyscorp-pw1-hosted/Documents/Projects_2018/CH401/401180022/03-WSP/CAD/62R23-RB-1/Sheets/Civil/D162R23-sht-stagingtypical2-01

WSP USA Inc.
30 N. LASALLE STREET
SUITE 4200
CHICAGO, IL 60602
TEL: (312) 782-8150

USER NAME = USGP718052	DESIGNED - JFA	REVISED - 1 01/30/2026	
	DRAWN - JFA	REVISED -	
PLOT SCALE = 20.000 ' / in.	CHECKED - SW	REVISED -	
PLOT DATE = 1/28/2026	DATE - 11/07/2025	REVISED -	

STATE OF ILLINOIS
DEPARTMENT OF TRANSPORTATION

SUGGESTED STAGES OF CONSTRUCTION AND TRAFFIC CONTROL
TYPICAL SECTIONS

SCALE: | SHEET 1 OF 1 SHEETS | STA. TO STA.

F.A.I. RTE.	SECTION	COUNTY	TOTAL SHEETS	SHEET NO.
80	FAI 80 21 STRUCTURE 2	WILL	1230	168A
		CONTRACT NO. 62R23		
	ILLINOIS	FED. AID PROJECT		

THIS SHEET DELETED

1 DELETED ENTIRE SHEET 2/4/2026

1

MODEL: Default
FILE NAME: pw://transystems-pw.bentley.com:transyscorp-pw1-hosted/Documents/Projects_2018/CH401/401180022/03-WSP/CAD/62R23-RB-1/Sheets/CMD162R23-sht-EAST-MOT-typical-01

USER NAME = tmmroz	DESIGNED - JAP	REVISED - 1 01/30/2026	STATE OF ILLINOIS DEPARTMENT OF TRANSPORTATION	SUGGESTED STAGES OF CONSTRUCTION AND TRAFFIC CONTROL TYPICAL SECTIONS	
	DRAWN - TMM	REVISED -			
PLOT SCALE = 100.000 ' / in.	CHECKED - JIR	REVISED -			
PLOT DATE = 1/28/2026	DATE - 11/7/2025	REVISED -		SCALE: NTS / SHEET 8 OF 18 SHEETS / STA. / TO STA.	

F.A.I. RTE.	SECTION	COUNTY	TOTAL SHEETS	SHEET NO.
80	FAI 80 21 STRUCTURE 2	WILL	1230	169
		CONTRACT NO. 62R23		
		ILLINOIS	FED. AID PROJECT	

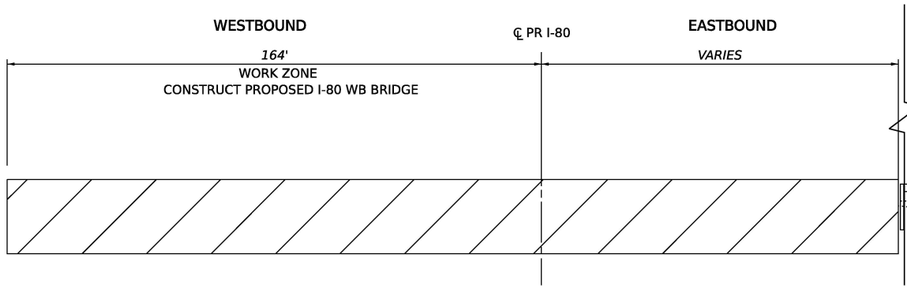

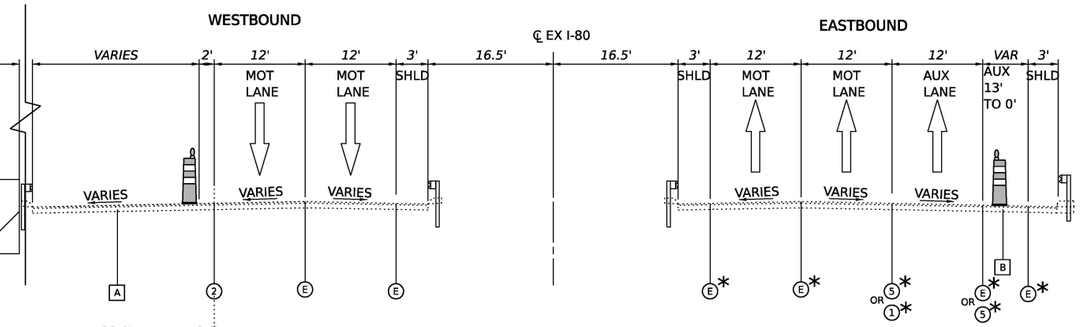

I-80 PR DES PLAINES RIVER BRIDGE MOT TYPICAL SECTION (STAGE 3)

PR STA TO 37+89.00 TO 60+04.87

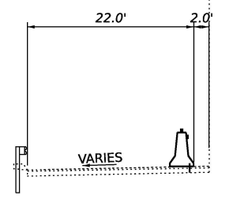

STA 693+01.56 TO 694+94.06

I-80 EX DES PLAINES RIVER BRIDGE MOT TYPICAL SECTION (STAGE 3)

EX STA TO 671+75.84 TO 694+94.06

A STA 671+75.84 TO 693+01.56

B STA 671+75.84 TO 674+91.36

LEGEND

- E EXISTING PAVEMENT MARKING
- P PERMANENT PAVEMENT MARKING
- R PAVEMENT MARKING REMOVAL
- 1 TEMP PVT MK - LINE 8" - EPOXY: 9' SKIP, 3' DASH WHITE
- 2 TEMP PVT MK - LINE 4" - EPOXY: SOLID WHITE
- 3 TEMP PVT MK - LINE 4" - EPOXY: SOLID YELLOW
- 4 TEMP PVT MK - LINE 5" - EPOXY: 30' SKIP, 10' DASH WHITE
- 5 TEMP PVT MK - LINE 8" - EPOXY: SOLID WHITE
- 6 TEMP PVT MK - LINE 12" - EPOXY: SOLID WHITE
- 7 TEMP PVT MK - LINE 6" - EPOXY: SOLID WHITE
- 8 TEMP PVT MK - LINE 4" - EPOXY: SOLID DOUBLE YELLOW
- 9 TEMP PVT MK - LINE 4" - EPOXY: 30' SKIP, 10' DASH WHITE
- 10 TEMP PVT MK - LINE 24" - EPOXY: SOLID WHITE
- 11 TEMP PVT MK - LINE 12" - EPOXY: YELLOW 45° DIAGONALS @ 75' SPACING INTERVALS
- 12 TEMP PVT MK - LINE 4" - EPOXY: WHITE 45° DIAGONALS

WORK ZONE

TEMPORARY PAVEMENT (ACTIVELY CONSTRUCTING)

TEMPORARY PAVEMENT (PREVIOUSLY CONSTRUCTED)

TYPE II BARRICADE OR DRUM @ 100 FT C-C ALONG ROADWAY (TANGENT), 50 FT C-C ALONG TAPERS AND RAMPS

TEMPORARY CONCRETE BARRIER WITH TYPE C REFLECTORS AND ANCHOR PER STANDARDS 704001 AND 782006

TEMPORARY CONCRETE BARRIER WITH GLARE SCREEN

EXISTING GUARDRAIL

* FROM PREVIOUS STAGE

NOTES:

1. TRAFFIC CONTROL PLANS SHOW HMA TEMPORARY PAVEMENT OPTION AS VISUAL ONLY. SEE ROADWAY TYPICAL SECTIONS FOR TEMPORARY PAVEMENT STRUCTURE OPTIONS.

1 REVISED ENTIRE SHEET 2/4/2026

MODEL: Default
FILE NAME: pw://transystems-pw.bentley.com:transyscorp-pw1-hosted/Documents/Projects_2018/CH401/401180022/03-WSP/CAD/62R23-RB-1/Sheets/CivIII/D162R23-sht-stagingtypical2-01

WSP USA Inc.
30 N. LASALLE STREET
SUITE 4200
CHICAGO, IL 60602
TEL: (312) 782-8150

USER NAME = USGP718052	DESIGNED - HA	REVISED - 1 01/30/2026	
	DRAWN - HA	REVISED -	
PLOT SCALE = 20.000 ' / in.	CHECKED - SW	REVISED -	
PLOT DATE = 1/28/2026	DATE - 11/07/2025	REVISED -	

STATE OF ILLINOIS
DEPARTMENT OF TRANSPORTATION

SUGGESTED STAGES OF CONSTRUCTION AND TRAFFIC CONTROL
TYPICAL SECTIONS

SCALE: NTS | SHEET 1 OF 1 SHEETS | STA. TO STA.

F.A.I. RTE.	SECTION	COUNTY	TOTAL SHEETS	SHEET NO.
80	FAI 80 21 STRUCTURE 2	WILL	1230	170
		CONTRACT NO. 62R23		
		ILLINOIS	FED. AID PROJECT	

THIS SHEET DELETED

1 DELETED ENTIRE SHEET 2/4/2026

1

MODEL: Default
FILE NAME: pw://transystems-pw.bentley.com:transyscorp-pw1-hosted/Documents/Projects_2018/CH401/401180022/03-WSP/CAD/62R23-RB-1/Sheets/CMD162R23-sht-EAST-MOT-typical-02

USER NAME = tmmroz	DESIGNED - JAP	REVISED - 1 01/30/2026	STATE OF ILLINOIS DEPARTMENT OF TRANSPORTATION	SUGGESTED STAGES OF CONSTRUCTION AND TRAFFIC CONTROL TYPICAL SECTIONS	F.A.I. RTE. 80 / SECTION FAI 80 21 STRUCTURE 2 / COUNTY WILL / TOTAL SHEETS 1230 / SHEET NO. 171
	DRAWN - TMM	REVISED -			CONTRACT NO. 62R23
PLOT SCALE = 100.000 ' / in.	CHECKED - JIR	REVISED -			
PLOT DATE = 1/28/2026	DATE - 11/7/2025	REVISED -		SCALE: NTS / SHEET 9 OF 18 SHEETS / STA. / TO STA.	ILLINOIS FED. AID PROJECT

THIS SHEET DELETED

1 DELETED ENTIRE SHEET 2/4/2026

1

MODEL: Default
FILE NAME: pw://transystems-pw.bentley.com:transyscorp-pw1-hosted/Documents/Projects_2018/CH401/401180022/03-WSP/CAD/62R23-RB-1/Sheets/CMD162R23-sht-EAST-MOT-typical-03

USER NAME = tmmroz	DESIGNED - JAP	REVISED - 1 01/30/2026	STATE OF ILLINOIS DEPARTMENT OF TRANSPORTATION	SUGGESTED STAGES OF CONSTRUCTION AND TRAFFIC CONTROL TYPICAL SECTIONS	F.A.I. RTE. 80 / SECTION FAI 80 21 STRUCTURE 2 / COUNTY WILL / TOTAL SHEETS 1230 / SHEET NO. 172
	DRAWN - TMM	REVISED -			CONTRACT NO. 62R23
PLOT SCALE = 100.000 ' / in.	CHECKED - JIR	REVISED -			
PLOT DATE = 1/28/2026	DATE - 11/7/2025	REVISED -		SCALE: NTS / SHEET 10 OF 18 SHEETS / STA. / TO STA.	ILLINOIS / FED. AID PROJECT

THIS SHEET DELETED

1 DELETED ENTIRE SHEET 2/4/2026

1

MODEL: Default
FILE NAME: pw://transystems-pw.bentley.com:transyscorp-pw1-hosted/Documents/Projects_2018/CH401/401180022/03-WSP/CAD/62R23-RB-1/Sheets/CMD162R23-sht-EAST-MOT-typical-04

USER NAME = tmmroz	DESIGNED - JAP	REVISED - 1 01/30/2026	STATE OF ILLINOIS DEPARTMENT OF TRANSPORTATION	SUGGESTED STAGES OF CONSTRUCTION AND TRAFFIC CONTROL TYPICAL SECTIONS	F.A.I. RTE. 80 / SECTION FAI 80 21 STRUCTURE 2 / COUNTY WILL / TOTAL SHEETS 1230 / SHEET NO. 173
	DRAWN - TMM	REVISED -			CONTRACT NO. 62R23
PLOT SCALE = 100.000 ' / in.	CHECKED - JIR	REVISED -			
PLOT DATE = 1/28/2026	DATE - 11/7/2025	REVISED -		SCALE: NTS / SHEET 11 OF 18 SHEETS / STA. / TO STA.	ILLINOIS / FED. AID PROJECT

THIS SHEET DELETED

1 DELETED ENTIRE SHEET 2/4/2026

1

MODEL: Default
FILE NAME: pw://transystems-pw.bentley.com:transyscorp-pw1-hosted/Documents/Projects_2018/CH401/401180022/03-WSP/CAD/62R23-RB-1/Sheets/CMD162R23-sht-EAST-MOT-typical-05

USER NAME = tmmroz	DESIGNED - JAP	REVISED - 1 01/30/2026	STATE OF ILLINOIS DEPARTMENT OF TRANSPORTATION	SUGGESTED STAGES OF CONSTRUCTION AND TRAFFIC CONTROL TYPICAL SECTIONS	F.A.I. RTE. 80 / SECTION FAI 80 21 STRUCTURE 2 / COUNTY WILL / TOTAL SHEETS 1230 / SHEET NO. 174
	DRAWN - TMM	REVISED -			CONTRACT NO. 62R23
PLOT SCALE = 100.000 ' / in.	CHECKED - JIR	REVISED -			
PLOT DATE = 1/28/2026	DATE - 11/7/2025	REVISED -		SCALE: NTS / SHEET 12 OF 18 SHEETS / STA. / TO STA.	ILLINOIS / FED. AID PROJECT

THIS SHEET DELETED

1 DELETED ENTIRE SHEET 2/4/2026

1

MODEL: Default
FILE NAME: pw://transystems-pw.bentley.com:transyscorp-pw1-hosted/Documents/Projects_2018/CH401/401180022/03-WSP/CAD/62R23-RB-1/Sheets/CMD162R23-sht-EAST-MOT-typical-06

USER NAME = tmmroz	DESIGNED - JAP	REVISED - 1 01/30/2026	STATE OF ILLINOIS DEPARTMENT OF TRANSPORTATION	SUGGESTED STAGES OF CONSTRUCTION AND TRAFFIC CONTROL TYPICAL SECTIONS	F.A.I. RTE. 80 / SECTION FAI 80 21 STRUCTURE 2 / COUNTY WILL / TOTAL SHEETS 1230 / SHEET NO. 175
	DRAWN - TMM	REVISED -			CONTRACT NO. 62R23
PLOT SCALE = 100.000 ' / in.	CHECKED - JIR	REVISED -			
PLOT DATE = 1/28/2026	DATE - 11/7/2025	REVISED -		SCALE: NTS / SHEET 13 OF 18 SHEETS / STA. / TO STA.	ILLINOIS / FED. AID PROJECT

THIS SHEET DELETED

1 DELETED ENTIRE SHEET 2/4/2026

1

MODEL: Default
FILE NAME: pw://transystems-pw.bentley.com:transyscorp-pw1-hosted/Documents/Projects_2018/CH401/401180022/03-WSP/CAD/62R23-RB-1/Sheets/CMD162R23-sht-EAST-MOT-typical-07

USER NAME = tmmroz	DESIGNED - JAP	REVISED - 1 01/30/2026	STATE OF ILLINOIS DEPARTMENT OF TRANSPORTATION	SUGGESTED STAGES OF CONSTRUCTION AND TRAFFIC CONTROL TYPICAL SECTIONS	
	DRAWN - TMM	REVISED -			
PLOT SCALE = 100.000 ' / in.	CHECKED - JIR	REVISED -			
PLOT DATE = 1/28/2026	DATE - 11/7/2025	REVISED -		SCALE: NTS / SHEET 14 OF 18 SHEETS / STA. / TO STA.	

F.A.I. RTE.	SECTION	COUNTY	TOTAL SHEETS	SHEET NO.
80	FAI 80 21 STRUCTURE 2	WILL	1230	176
		CONTRACT NO. 62R23		
		ILLINOIS	FED. AID PROJECT	

THIS SHEET DELETED

1 DELETED ENTIRE SHEET 2/4/2026

1

MODEL: Default
FILE NAME: pw://transystems-pw.bentley.com:transyscorp-pw1-hosted/Documents/Projects_2018/CH401/401180022/03-WSP/CAD/62R23-RB-1/Sheets/CMD162R23-sht-EAST-MOT-typical-08

USER NAME = tmmroz	DESIGNED - JAP	REVISED - 1 01/30/2026	STATE OF ILLINOIS DEPARTMENT OF TRANSPORTATION	SUGGESTED STAGES OF CONSTRUCTION AND TRAFFIC CONTROL TYPICAL SECTIONS	
	DRAWN - TMM	REVISED -			
PLOT SCALE = 100.000 ' / in.	CHECKED - JIR	REVISED -			
PLOT DATE = 1/28/2026	DATE - 11/7/2025	REVISED -		SCALE: NTS / SHEET 15 OF 18 SHEETS / STA. / TO STA.	

F.A.I. RTE.	SECTION	COUNTY	TOTAL SHEETS	SHEET NO.
80	FAI 80 21 STRUCTURE 2	WILL	1230	177
		CONTRACT NO. 62R23		
		ILLINOIS	FED. AID PROJECT	

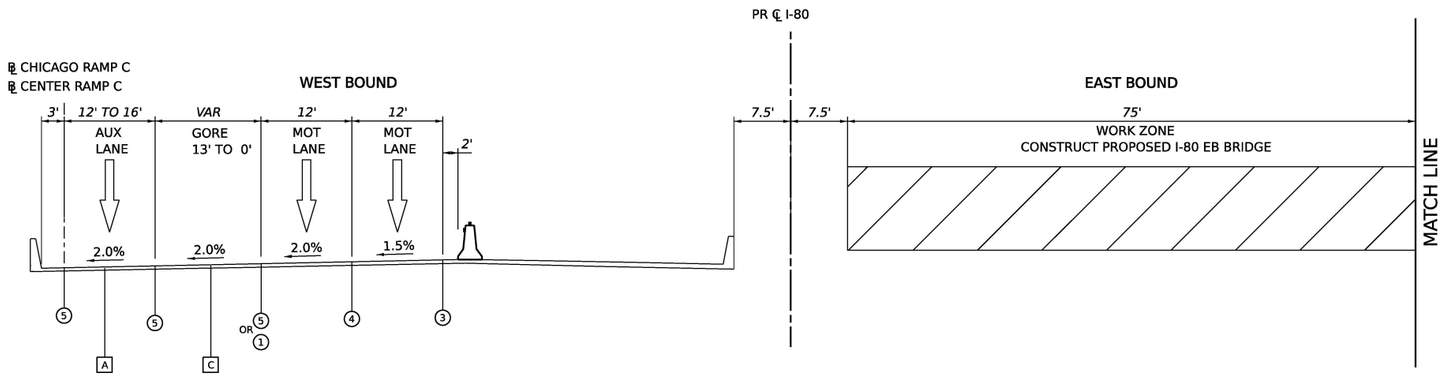

I-80 PR DES PLAINES RIVER BRIDGE MOT TYPICAL SECTION (STAGE 4)

PROP STA 37+89.00 TO 60+04.87

C STA 37+89.00 TO 41+31.00

A 16' RAMP LANE 37+89.00 TO 41+31.00
16' RAMP LANE 56+91.00 to 59+95.61
12' LANE 42+08.75 to 56+24.71

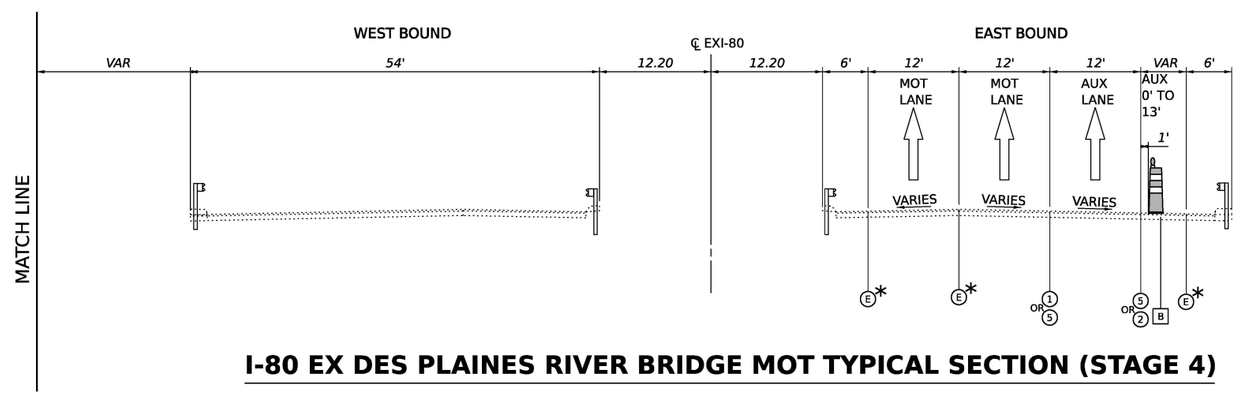

I-80 EX DES PLAINES RIVER BRIDGE MOT TYPICAL SECTION (STAGE 4)

EX STA TO 671+75.84 TO 694+94.06

B STA 671+75.84 TO 674+91.36

LEGEND

- E EXISTING PAVEMENT MARKING
- P PERMANENT PAVEMENT MARKING
- R PAVEMENT MARKING REMOVAL
- 1 TEMP PVT MK - LINE 8" - EPOXY: 9' SKIP, 3' DASH WHITE
- 2 TEMP PVT MK - LINE 4" - EPOXY: SOLID WHITE
- 3 TEMP PVT MK - LINE 4" - EPOXY: SOLID YELLOW
- 4 TEMP PVT MK - LINE 5" - EPOXY: 30' SKIP, 10' DASH WHITE
- 5 TEMP PVT MK - LINE 8" - EPOXY: SOLID WHITE
- 6 TEMP PVT MK - LINE 12" - EPOXY: SOLID WHITE
- 7 TEMP PVT MK - LINE 6" - EPOXY: SOLID WHITE
- 8 TEMP PVT MK - LINE 4" - EPOXY: SOLID DOUBLE YELLOW
- 9 TEMP PVT MK - LINE 4" - EPOXY: 30' SKIP, 10' DASH WHITE
- 10 TEMP PVT MK - LINE 24" - EPOXY: SOLID WHITE
- 11 TEMP PVT MK - LINE 12" - EPOXY: YELLOW 45° DIAGONALS @ 75' SPACING INTERVALS
- 12 TEMP PVT MK - LINE 4" - EPOXY: WHITE 45° DIAGONALS
- 13 TEMP PVT MK - EPOXY: WHITE LETTERS AND SYMBOLS
- 14 TEMP PVT MK - LINE 6" - EPOXY: 9' SKIP, 3' DASH WHITE

- WORK ZONE
- TEMPORARY PAVEMENT (ACTIVELY CONSTRUCTING)
- TEMPORARY PAVEMENT (PREVIOUSLY CONSTRUCTED)
- TYPE II BARRICADE OR DRUM @ 100 FT C-C ALONG ROADWAY (TANGENT), 50 FT C-C ALONG TAPERS AND RAMPS
- TEMPORARY CONCRETE BARRIER WITH TYPE C REFLECTORS AND ANCHOR PER STANDARDS 704001 AND 782006
- TEMPORARY CONCRETE BARRIER WITH GLARE SCREEN
- EXISTING GUARDRAIL
- * FROM PREVIOUS STAGE

NOTES:

1. TRAFFIC CONTROL PLANS SHOW HMA TEMPORARY PAVEMENT OPTION AS VISUAL ONLY. SEE ROADWAY TYPICAL SECTIONS FOR TEMPORARY PAVEMENT STRUCTURE OPTIONS.

1 REVISED ENTIRE SHEET 2/4/2026

THIS SHEET DELETED

1 DELETED ENTIRE SHEET 2/4/2026

1

MODEL: Default
FILE NAME: pw://transystems-pw.bentley.com:transyscorp-pw1-hosted/Documents/Projects_2018/CH401/401180022/03-WSP/CAD/62R23-RB-1/Sheets/CMD162R23-sht-EAST-MOT-typical-09

USER NAME = tmmroz	DESIGNED - JAP	REVISED - 1 01/30/2026	STATE OF ILLINOIS DEPARTMENT OF TRANSPORTATION	SUGGESTED STAGES OF CONSTRUCTION AND TRAFFIC CONTROL TYPICAL SECTIONS	F.A.I. RTE.	SECTION	COUNTY	TOTAL SHEETS	SHEET NO.
	DRAWN - TMM	REVISED -			80	FAI 80 21 STRUCTURE 2	WILL	1230	179
PLOT SCALE = 100.000 ' / in.	CHECKED - JIR	REVISED -					CONTRACT NO. 62R23		
PLOT DATE = 1/28/2026	DATE - 11/7/2025	REVISED -		SCALE: NTS SHEET 16 OF 18 SHEETS STA. TO STA.		ILLINOIS	FED. AID PROJECT		

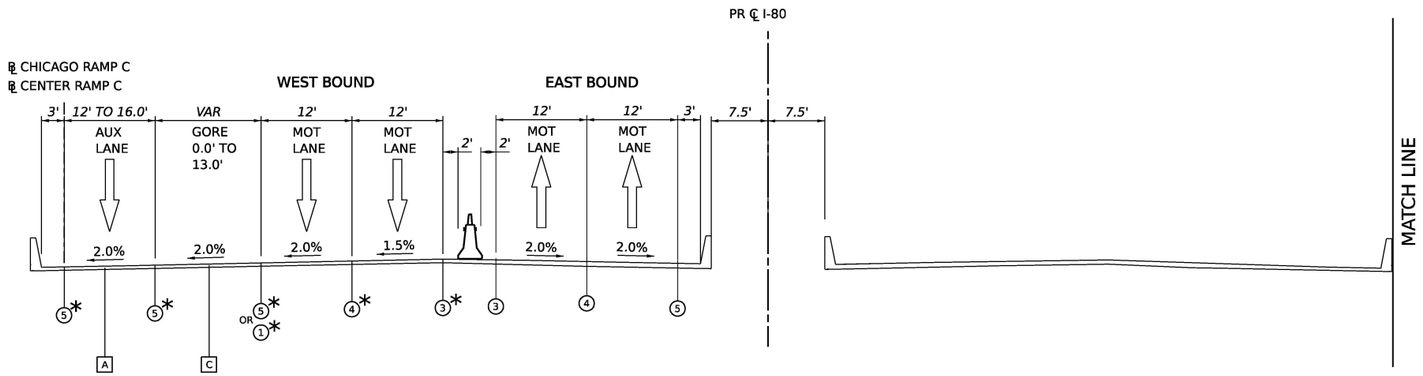

I-80 PR DES PLAINES RIVER BRIDGE MOT TYPICAL SECTION (STAGE 5)

PR STA 37+89.00 TO 60+04.87

C STA 37+89.00 TO 41+31.00

A 16' RAMP LANE 37+89.00 TO 41+31.00
16' RAMP LANE 56+91.00 to 59+95.61
12' LANE 42+08.75 to 56+24.71

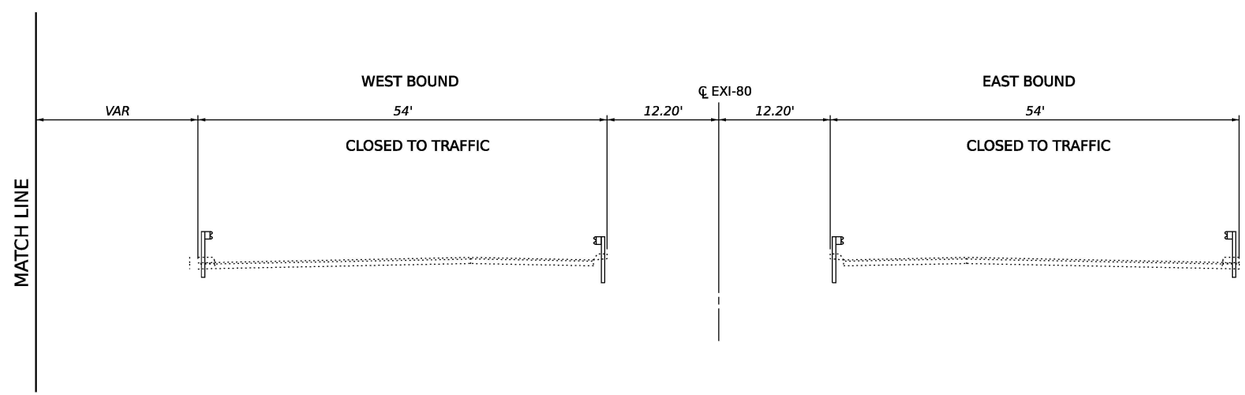

I-80 EX DES PLAINES RIVER BRIDGE MOT TYPICAL SECTION (STAGE 5)

EX STA TO 671+75.84 TO 694+94.06

LEGEND

- (E) EXISTING PAVEMENT MARKING
- (P) PERMANENT PAVEMENT MARKING
- (R) PAVEMENT MARKING REMOVAL
- (1) TEMP PVT MK - LINE 8" - EPOXY: 9' SKIP, 3' DASH WHITE
- (2) TEMP PVT MK - LINE 4" - EPOXY: SOLID WHITE
- (3) TEMP PVT MK - LINE 4" - EPOXY: SOLID YELLOW
- (4) TEMP PVT MK - LINE 5" - EPOXY: 30' SKIP, 10' DASH WHITE
- (5) TEMP PVT MK - LINE 8" - EPOXY: SOLID WHITE
- (6) TEMP PVT MK - LINE 12" - EPOXY: SOLID WHITE
- (7) TEMP PVT MK - LINE 6" - EPOXY: SOLID WHITE
- (8) TEMP PVT MK - LINE 4" - EPOXY: SOLID DOUBLE YELLOW
- (9) TEMP PVT MK - LINE 4" - EPOXY: 30' SKIP, 10' DASH WHITE
- (10) TEMP PVT MK - LINE 24" - EPOXY: SOLID WHITE
- (11) TEMP PVT MK - LINE 12" - EPOXY: YELLOW 45° DIAGONALS @ 75' SPACING INTERVALS
- (12) TEMP PVT MK - LINE 4" - EPOXY: WHITE 45° DIAGONALS
- (13) TEMP PVT MK - EPOXY: WHITE LETTERS AND SYMBOLS
- (14) TEMP PVT MK - LINE 6" - EPOXY: 9' SKIP, 3' DASH WHITE

- WORK ZONE
- TEMPORARY PAVEMENT (ACTIVELY CONSTRUCTING)
- TEMPORARY PAVEMENT (PREVIOUSLY CONSTRUCTED)
- TYPE II BARRICADE OR DRUM @ 100 FT C-C ALONG ROADWAY (TANGENT), 50 FT C-C ALONG TAPERS AND RAMPS
- TEMPORARY CONCRETE BARRIER WITH TYPE C REFLECTORS AND ANCHOR PER STANDARDS 704001 AND 782006
- TEMPORARY CONCRETE BARRIER WITH GLARE SCREEN
- EXISTING GUARDRAIL
- * FROM PREVIOUS STAGE

NOTES:

1. TRAFFIC CONTROL PLANS SHOW HMA TEMPORARY PAVEMENT OPTION AS VISUAL ONLY. SEE ROADWAY TYPICAL SECTIONS FOR TEMPORARY PAVEMENT STRUCTURE OPTIONS.

1 REVISED ENTIRE SHEET 2/4/2026

MODEL: Default
FILE NAME: pw://transystems-pw.bentley.com:transyscorp-pw1-hosted/Documents/Projects_2018/CH401/401180022/03-WSP/CAD/62R23-RB-1/Sheets/Civil/D162R23-sht-staginghypical2-01

WSP USA Inc.
30 N. LASALLE STREET
SUITE 4200
CHICAGO, IL 60602
TEL: (312) 782-8150

USER NAME = USGP718052	DESIGNED - HA	REVISED - 1 01/30/2026	STATE OF ILLINOIS DEPARTMENT OF TRANSPORTATION
	DRAWN - HA	REVISED -	
PLOT SCALE = 20.000 ' / in.	CHECKED - SW	REVISED -	
PLOT DATE = 1/28/2026	DATE - 11/07/2025	REVISED -	

SUGGESTED STAGES OF CONSTRUCTION AND TRAFFIC CONTROL
TYPICAL SECTIONS

SCALE: NTS | SHEET 1 OF 1 SHEETS | STA. TO STA.

F.A.I. RTE.	SECTION	COUNTY	TOTAL SHEETS	SHEET NO.
80	FAI 80 21 STRUCTURE 2	WILL	1230	180

CONTRACT NO. 62R23

ILLINOIS | FED. AID PROJECT

THIS SHEET DELETED

1 DELETED ENTIRE SHEET 2/4/2026

1

MODEL: Default
FILE NAME: pw://transystems-pw.bentley.com:transyscorp-pw1-hosted/Documents/Projects_2018/CH401/401180022/03-WSP/CAD/62R23-RB-1/Sheets/CKM0162R23-sht-EAST-MOT-typical-10

USER NAME = tmmroz	DESIGNED - JAP	REVISED - 1 01/30/2026	STATE OF ILLINOIS DEPARTMENT OF TRANSPORTATION	SUGGESTED STAGES OF CONSTRUCTION AND TRAFFIC CONTROL TYPICAL SECTIONS	F.A.I. RTE. 80 / SECTION FAI 80 21 STRUCTURE 2 / COUNTY WILL / TOTAL SHEETS 1230 / SHEET NO. 181
	DRAWN - TMM	REVISED -			CONTRACT NO. 62R23
PLOT SCALE = 100.000 ' / in.	CHECKED - JIR	REVISED -			
PLOT DATE = 1/28/2026	DATE - 11/7/2025	REVISED -		SCALE: NTS / SHEET 17 OF 18 SHEETS / STA. / TO STA.	ILLINOIS / FED. AID PROJECT

THIS SHEET DELETED

1 DELETED ENTIRE SHEET 2/4/2026

USER NAME = tmmroz	DESIGNED - JAP	REVISED - 1 01/30/2026	STATE OF ILLINOIS DEPARTMENT OF TRANSPORTATION	SUGGESTED STAGES OF CONSTRUCTION AND TRAFFIC CONTROL TYPICAL SECTIONS				F.A.I. RTE.	SECTION	COUNTY	TOTAL SHEETS	SHEET NO.
	DRAWN - TMM	REVISED -						80	FAI 80 21 STRUCTURE 2	WILL	1230	182
PLOT SCALE = 100.000 ' / in.	CHECKED - JIR	REVISED -								CONTRACT NO. 62R23		
PLOT DATE = 1/28/2026	DATE - 11/7/2025	REVISED -		SCALE: NTS	SHEET 18 OF 18 SHEETS	STA.	TO STA.		ILLINOIS	FED. AID PROJECT		

MODEL: Default
FILE NAME: pw://transystems-pw.bentley.com:transyscorp-pw1-hosted/Documents/Projects_2018/CH401/401180022/03-WSP/CAD/62R23-RB-1/Sheets/CMD162R23-sht-EAST-MOT-typical-11

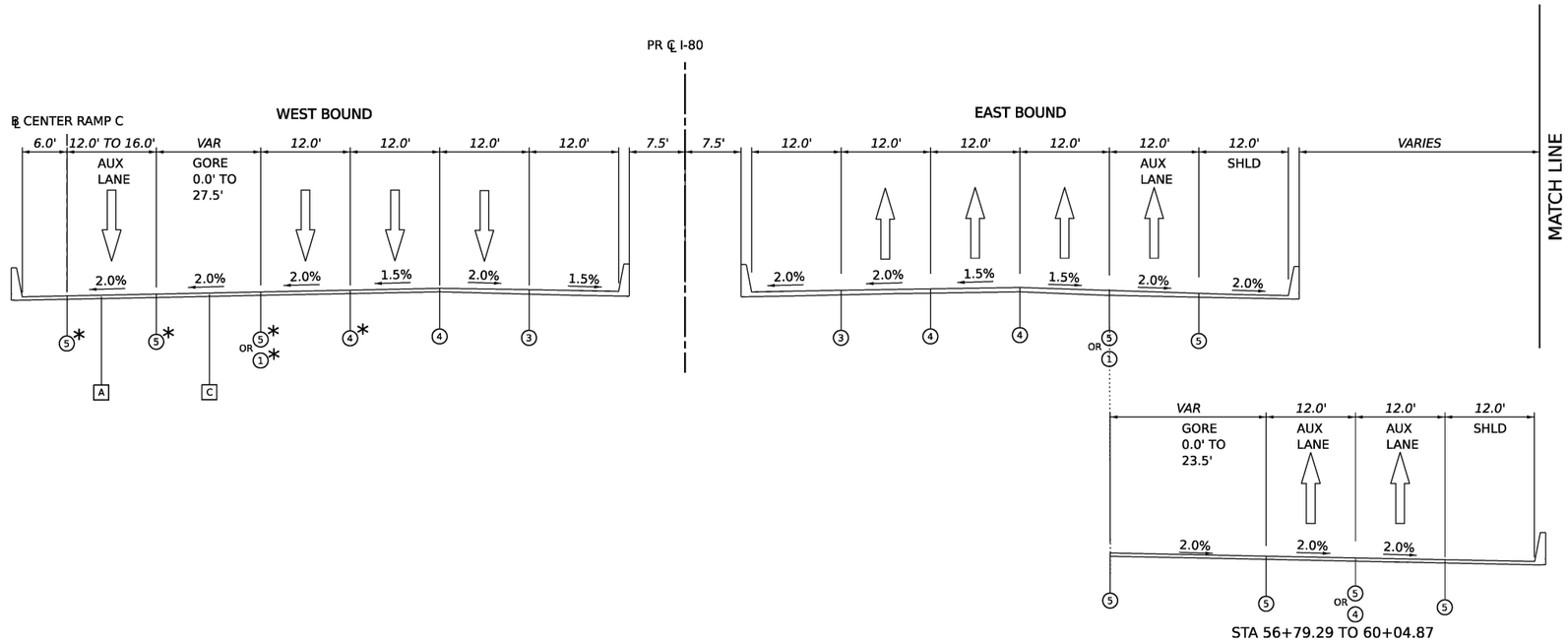

LEGEND

- (E) EXISTING PAVEMENT MARKING
- (P) PERMANENT PAVEMENT MARKING
- (R) PAVEMENT MARKING REMOVAL
- (1) TEMP PVT MK - LINE 8" - EPOXY: 9' SKIP, 3' DASH WHITE
- (2) TEMP PVT MK - LINE 4" - EPOXY: SOLID WHITE
- (3) TEMP PVT MK - LINE 4" - EPOXY: SOLID YELLOW
- (4) TEMP PVT MK - LINE 5" - EPOXY: 30' SKIP, 10' DASH WHITE
- (5) TEMP PVT MK - LINE 8" - EPOXY: SOLID WHITE
- (6) TEMP PVT MK - LINE 12" - EPOXY: SOLID WHITE
- (7) TEMP PVT MK - LINE 6" - EPOXY: SOLID WHITE
- (8) TEMP PVT MK - LINE 4" - EPOXY: SOLID DOUBLE YELLOW
- (9) TEMP PVT MK - LINE 4" - EPOXY: 30' SKIP, 10' DASH WHITE
- (10) TEMP PVT MK - LINE 24" - EPOXY: SOLID WHITE
- (11) TEMP PVT MK - LINE 12" - EPOXY: YELLOW 45° DIAGONALS @ 75' SPACING INTERVALS
- (12) TEMP PVT MK - LINE 4" - EPOXY: WHITE 45° DIAGONALS
- (13) TEMP PVT MK - EPOXY: WHITE LETTERS AND SYMBOLS
- (14) TEMP PVT MK - LINE 6" - EPOXY: 9' SKIP, 3' DASH WHITE

I-80 PR DES PLAINES RIVER BRIDGE MOT TYPICAL SECTION (STAGE 6)

PR STA 37+89.00 TO 60+04.87

[C] STA 37+89.00 TO 42+46.37

[A] 16' RAMP LANE 37+89.00 TO 42+46.37
16' RAMP LANE 53+75.62 TO 59+04.87
12' LANE 41+21.53 TO 51+73.69

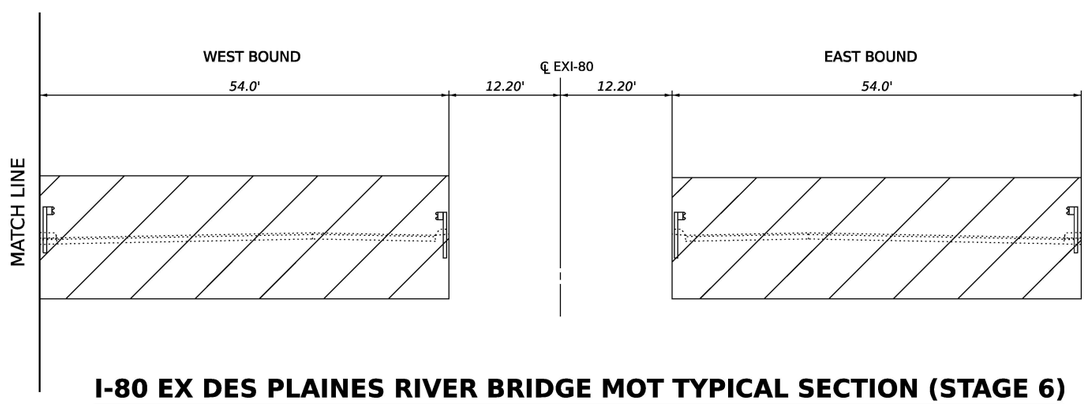

I-80 EX DES PLAINES RIVER BRIDGE MOT TYPICAL SECTION (STAGE 6)

EX STA TO 671+75.84 TO 694+94.06

- WORK ZONE
- TEMPORARY PAVEMENT (ACTIVELY CONSTRUCTING)
- TEMPORARY PAVEMENT (PREVIOUSLY CONSTRUCTED)
- TYPE II BARRICADE OR DRUM @ 100 FT C-C ALONG ROADWAY (TANGENT), 50 FT C-C ALONG TAPERS AND RAMPS
- TEMPORARY CONCRETE BARRIER WITH TYPE C REFLECTORS AND ANCHOR PER STANDARDS 704001 AND 782006
- TEMPORARY CONCRETE BARRIER WITH GLARE SCREEN
- EXISTING GUARDRAIL
- * FROM PREVIOUS STAGE

NOTES:

1. TRAFFIC CONTROL PLANS SHOW HMA TEMPORARY PAVEMENT OPTION AS VISUAL ONLY. SEE ROADWAY TYPICAL SECTIONS FOR TEMPORARY PAVEMENT STRUCTURE OPTIONS.

1 ADDED ENTIRE SHEET 1/4/2026

MODEL: Default
FILE NAME: pw://transystems-pw.bentley.com:transyscorp-pw1-hosted/Documents/Projects_2018/CH401/401180022/03-WSP/CAD/62R23-RB-1/Sheets/Cvlt/D162R23-sht-stagingtypical2-01

WSP USA Inc.
30 N. LASALLE STREET
SUITE 4200
CHICAGO, IL 60602
TEL: (312) 782 8150

USER NAME = USGP718052	DESIGNED - JFA	REVISED - 1 01/30/2026	
	DRAWN - JFA	REVISED -	
PLOT SCALE = 20.000 ' / in.	CHECKED - SW	REVISED -	
PLOT DATE = 1/28/2026	DATE - 11/07/2025	REVISED -	

STATE OF ILLINOIS
DEPARTMENT OF TRANSPORTATION

SUGGESTED STAGES OF CONSTRUCTION AND TRAFFIC CONTROL
TYPICAL SECTIONS

SCALE: NTS | SHEET 1 OF 1 SHEETS | STA. TO STA.

F.A.I. RTE.	SECTION	COUNTY	TOTAL SHEETS	SHEET NO.
80	FAI 80 21 STRUCTURE 2	WILL	1230	182A
		CONTRACT NO. 62R23		
	ILLINOIS	FED. AID PROJECT		

THIS SHEET DELETED

1 DELETED ENTIRE SHEET 2/4/2026 1

MODEL: Default
FILE NAME: pw://transystems-pw.bentley.com:transyscorp-pw1-hosted/Documents/Projects_2018/CH401/401180022/03-WSP/CAD/62R23-RB-1/Sheets/CMD162R23-sht-EAST-MOTStage2-02.dgn

USER NAME = tmmroz	DESIGNED - JAP	REVISED - 1 01/30/2026	STATE OF ILLINOIS DEPARTMENT OF TRANSPORTATION	SUGGESTED STAGES OF CONSTRUCTION AND TRAFFIC CONTROL STAGE 2	F.A.I. RTE. 80 / SECTION FAI 80 21 STRUCTURE 2 / COUNTY WILL / TOTAL SHEETS 1230 / SHEET NO. 185
	DRAWN - TMM	REVISED -			CONTRACT NO. 62R23
PLOT SCALE = 100.000 ' / in.	CHECKED - JIR	REVISED -			
PLOT DATE = 1/28/2026	DATE - 11/7/2025	REVISED -		SCALE: 1" = 50' / SHEET 2 OF 6 SHEETS / STA. / TO STA.	ILLINOIS / FED. AID PROJECT

THIS SHEET DELETED

1 ADDED ENTIRE SHEET 1/4/2026

1

MODEL: Default
FILE NAME: pw://transystems-pw.bentley.com:transyscorp-pw1-hosted/Documents/Projects_2018/CH401/401180022/03-WSP/CAD/62R23-RB-1/Sheets/CMD162R23-sht-EAST-MOTStage2-03.dgn

USER NAME = tmmroz	DESIGNED - JAP	REVISED - 1 01/30/2026	STATE OF ILLINOIS DEPARTMENT OF TRANSPORTATION	SUGGESTED STAGES OF CONSTRUCTION AND TRAFFIC CONTROL STAGE 2	F.A.I. RTE. 80 / SECTION FAI 80 21 STRUCTURE 2 / COUNTY WILL / TOTAL SHEETS 1230 / SHEET NO. 186
	DRAWN - TMM	REVISED -			CONTRACT NO. 62R23
PLOT SCALE = 100.000 ' / in.	CHECKED - JIR	REVISED -			
PLOT DATE = 1/28/2026	DATE - 11/7/2025	REVISED -		SCALE: 1" = 50' / SHEET 3 OF 6 SHEETS / STA. / TO STA.	ILLINOIS / FED. AID PROJECT

THIS SHEET DELETED

1 DELETED ENTIRE SHEET 2/4/2026

1

MODEL: Default
FILE NAME: pw://transystems-pw.bentley.com:transyscorp-pw1-hosted/Documents/Projects_2018/CH401/401180022/03-WSP/CAD/62R23-RB-1/Sheets/CMD162R23-sht-EAST-MOTStage2-05.dgn

USER NAME = tmmroz	DESIGNED - JAP	REVISED - 1 01/30/2026	STATE OF ILLINOIS DEPARTMENT OF TRANSPORTATION	SUGGESTED STAGES OF CONSTRUCTION AND TRAFFIC CONTROL STAGE 2	F.A.I. RTE. 80 / SECTION FAI 80 21 STRUCTURE 2 / COUNTY WILL / TOTAL SHEETS 1230 / SHEET NO. 187
	DRAWN - TMM	REVISED -			CONTRACT NO. 62R23
PLOT SCALE = 100.000 ' / in.	CHECKED - JIR	REVISED -			
PLOT DATE = 1/28/2026	DATE - 11/7/2025	REVISED -		SCALE: 1" = 50' / SHEET 5 OF 6 SHEETS / STA. / TO STA.	ILLINOIS / FED. AID PROJECT

THIS SHEET DELETED

1 DELETED ENTIRE SHEET 2/4/2026 1

MODEL: Default
FILE NAME: pw://transystems-pw.bentley.com:transyscorp-pw1-hosted/Documents/Projects_2018/CH401/401180022/03-WSP/CAD/62R23-RB-1/Sheets/CMD162R23-sht-EAST-MOTStage2-06.dgn

USER NAME = tmmroz	DESIGNED - JAP	REVISED - 1 01/30/2026	STATE OF ILLINOIS DEPARTMENT OF TRANSPORTATION	SUGGESTED STAGES OF CONSTRUCTION AND TRAFFIC CONTROL STAGE 2	F.A.I. RTE. 80 / SECTION FAI 80 21 STRUCTURE 2 / COUNTY WILL / TOTAL SHEETS 1230 / SHEET NO. 188
	DRAWN - TMM	REVISED -			CONTRACT NO. 62R23
PLOT SCALE = 100.000 ' / in.	CHECKED - JIR	REVISED -			
PLOT DATE = 1/28/2026	DATE - 11/7/2025	REVISED -		SCALE: 1" = 50' / SHEET 6 OF 6 SHEETS / STA. TO STA.	ILLINOIS FED. AID PROJECT

NOTES:
1. UNLESS NOTED OTHERWISE, ALL STATIONS AND OFFSETS ARE TAKEN FROM PR CL I-80 OR PR CL I-80 RAMPS.
2. STAGE 3 TRAFFIC TO COORDINATE WITH ADJACENT CONTRACT 62R22 TRAFFIC STAGING TO THE WEST.
3. TEMPORARY SIGNS ON THE DES PLAINES RIVER BRIDGE SHALL BE MOUNTED TO EXISTING LIGHT POLES.
4. MAINTENANCE OF TRAFFIC ON THIS SHEET IS PROVIDED BY 62R22

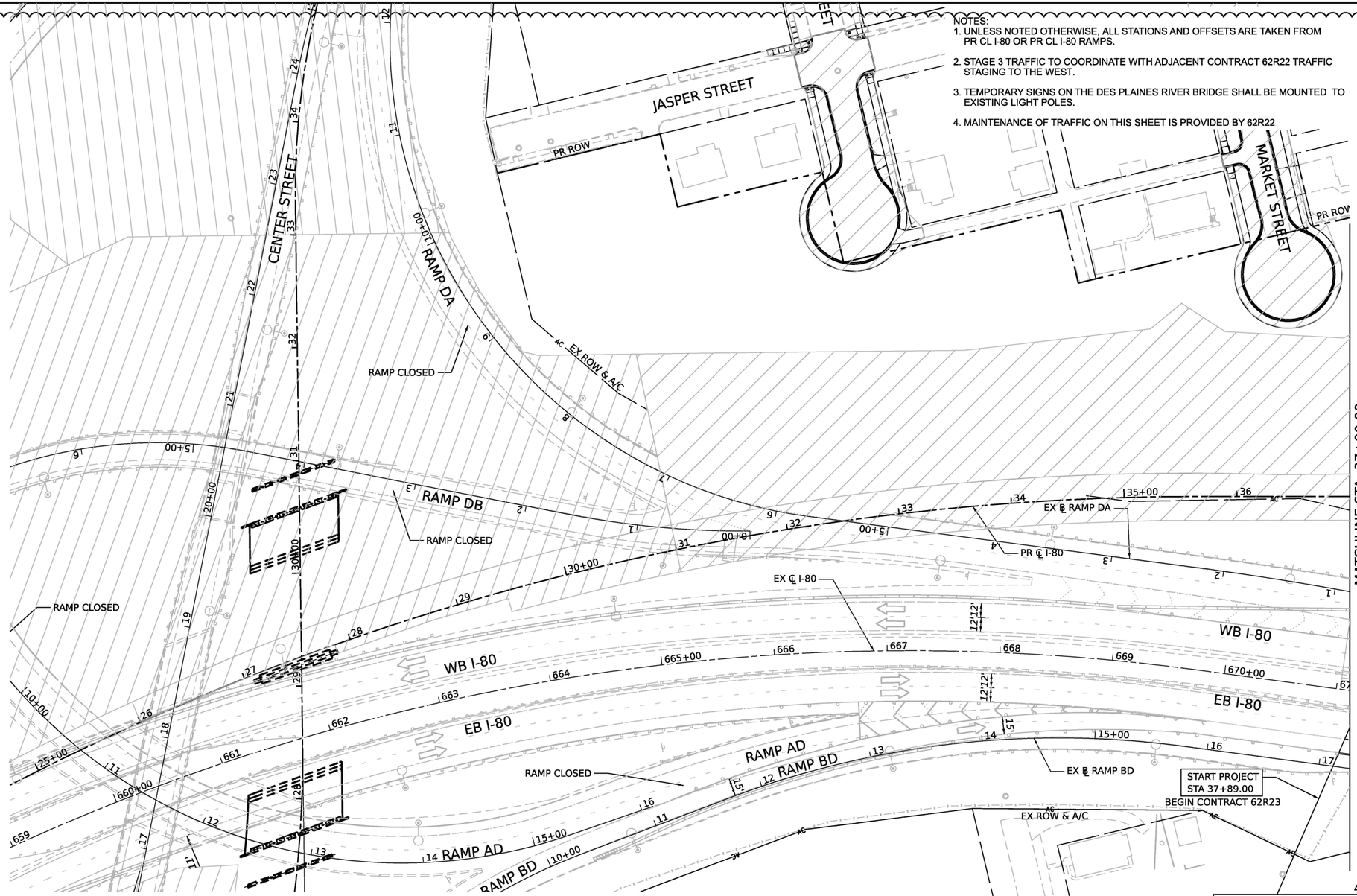

1 ADDED ENTIRE SHEET 1/4/2026

NOTE
- UNLESS NOTED OTHERWISE, ALL STATIONS AND OFFSETS ARE TAKEN FROM PR CL I-80 OR PR CL I-80 RAMPS

LEGEND

- WORK ZONE
- PAVEMENT CONSTRUCTED IN PREVIOUS STAGE
- TEMPORARY PAVEMENT (PREVIOUSLY CONSTRUCTED)
- TEMPORARY PAVEMENT (ACTIVELY CONSTRUCTING)
- TEMPORARY CONCRETE BARRIER OR RELOCATE TEMPORARY CONCRETE BARRIER
- TYPE II BARRICADE, DRUM, OR VERTICAL BARRICADE WITH STEADY BURN MONODIRECTIONAL LIGHT @ 100 FT C-C ALONG ROADWAY (TANGENT), 50 FT CENTERS ALONG TAPERS AND RAMPS
- TEMPORARY IMPACT ATTENUATOR
- DIRECTIONAL INDICATOR BARRICADE WITH STEADY BURN MONODIRECTIONAL LIGHT
- TYPE III BARRICADE
- DIRECTION OF TRAFFIC
- ARROW BOARD

* FROM PREVIOUS STAGE
TEMPORARY TRAFFIC CONTROL SIGN AND SUPPORT

(E) EXISTING PAVEMENT MARKINGS
(R) PAVEMENT MARKING REMOVAL
(1) TEMP PVT MK - LINE 8" - EPOXY: 9' SKIP, 3' DASH WHITE
(2) TEMP PVT MK - LINE 4" - EPOXY: SOLID WHITE
(3) TEMP PVT MK - LINE 4" - EPOXY: SOLID YELLOW
(4) TEMP PVT MK - LINE 5" - EPOXY: 30' SKIP, 10' DASH WHITE
(5) TEMP PVT MK - LINE 8" - EPOXY: SOLID WHITE
(6) TEMP PVT MK - LINE 12" - EPOXY: SOLID WHITE
(7) TEMP PVT MK - LINE 4" - EPOXY: 30' SKIP, 10' DASH WHITE
(8) TEMP PVT MK - LINE 4" - EPOXY: SOLID DOUBLE YELLOW
(9) TEMP PVT MK - LINE 6" - EPOXY: SOLID WHITE
(10) TEMP PVT MK - LINE 24" - EPOXY: SOLID WHITE
(11) TEMP PVT MK - LINE 24" - EPOXY: WHITE LETTERS AND SYMBOLS
(12) TEMP PVT MK - LINE 12" - EPOXY: SOLID YELLOW
(13) TEMP PVT MK - LINE 4" - EPOXY: 6' SKIP, 2' DASH WHITE

N

0 50 100 150
SCALE IN FEET

KEY PLAN

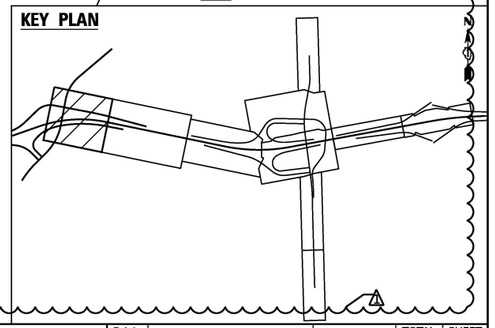

MODEL: Default
FILE NAME: pw://transystems-pw.bentley.com:transyscorp-pw1-hosted/Documents/Projects_2018/CH401/401180022/03-WSP/CAD/62R23-RB-1/Sheets/Civil/D162R23-sht-staging2-1

WSP USA Inc.
30 N. LASALLE STREET
SUITE 4200
CHICAGO, IL 60602
TEL: (312) 782-8150

USER NAME = USGP718052	DESIGNED - HA	REVISED - 1 01/30/2026	
	DRAWN - JFA	REVISED -	
PLOT SCALE = 100.000 ' / in.	CHECKED - SW	REVISED -	
PLOT DATE = 1/28/2026	DATE - 11/07/2025	REVISED -	

STATE OF ILLINOIS
DEPARTMENT OF TRANSPORTATION

SUGGESTED STAGES OF CONSTRUCTION AND TRAFFIC CONTROL
STAGE 2A

SCALE: 1" = 50' | SHEET 1 OF 3 SHEETS | STA. TO STA.

F.A.I. RTE.	SECTION	COUNTY	TOTAL SHEETS	SHEET NO.
80	FAI 80 21 STRUCTURE 2	WILL	1230	188A
		CONTRACT NO. 62R23		
	ILLINOIS	FED. AID PROJECT		

NOTES:
1. UNLESS NOTED OTHERWISE, ALL STATIONS AND OFFSETS ARE TAKEN FROM PR CL I-80 OR PR CL I-80 RAMPS.
2. STAGE 3 TRAFFIC TO COORDINATE WITH ADJACENT CONTRACT 62R22 TRAFFIC STAGING TO THE WEST.
3. TEMPORARY SIGNS ON THE DES PLAINES RIVER BRIDGE SHALL BE MOUNTED TO EXISTING LIGHT POLES.

LEGEND

- WORK ZONE
- PAVEMENT CONSTRUCTED IN PREVIOUS STAGE
- TEMPORARY PAVEMENT (PREVIOUSLY CONSTRUCTED)
- TEMPORARY PAVEMENT (ACTIVELY CONSTRUCTING)
- TEMPORARY CONCRETE BARRIER OR RELOCATE TEMPORARY CONCRETE BARRIER
- TYPE II BARRICADE, DRUM, OR VERTICAL BARRICADE WITH STEADY BURN MONODIRECTIONAL LIGHT @ 100 FT C-C ALONG ROADWAY (TANGENT), 50 FT CENTERS ALONG TAPERS AND RAMPS
- TEMPORARY IMPACT ATTENUATOR
- DIRECTIONAL INDICATOR BARRICADE WITH STEADY BURN MONODIRECTIONAL LIGHT
- TYPE III BARRICADE
- DIRECTION OF TRAFFIC
- ARROW BOARD
- * FROM PREVIOUS STAGE
- TEMPORARY TRAFFIC CONTROL SIGN AND SUPPORT
- (E) EXISTING PAVEMENT MARKINGS
- (R) PAVEMENT MARKING REMOVAL
- (1) TEMP PVT MK - LINE 8" - EPOXY: 9' SKIP, 3' DASH WHITE
- (2) TEMP PVT MK - LINE 4" - EPOXY: SOLID WHITE
- (3) TEMP PVT MK - LINE 4" - EPOXY: SOLID YELLOW
- (4) TEMP PVT MK - LINE 5" - EPOXY: 30' SKIP, 10' DASH WHITE
- (5) TEMP PVT MK - LINE 8" - EPOXY: SOLID WHITE
- (6) TEMP PVT MK - LINE 12" - EPOXY: SOLID WHITE
- (7) TEMP PVT MK - LINE 4" - EPOXY: 30' SKIP, 10' DASH WHITE
- (8) TEMP PVT MK - LINE 4" - EPOXY: SOLID DOUBLE YELLOW
- (9) TEMP PVT MK - LINE 6" - EPOXY: SOLID WHITE
- (10) TEMP PVT MK - LINE 24" - EPOXY: SOLID WHITE
- (11) TEMP PVT MK - LINE 24" - EPOXY: WHITE LETTERS AND SYMBOLS
- (12) TEMP PVT MK - LINE 12" - EPOXY: SOLID YELLOW
- (13) TEMP PVT MK - LINE 4" - EPOXY: 6' SKIP, 2' DASH WHITE

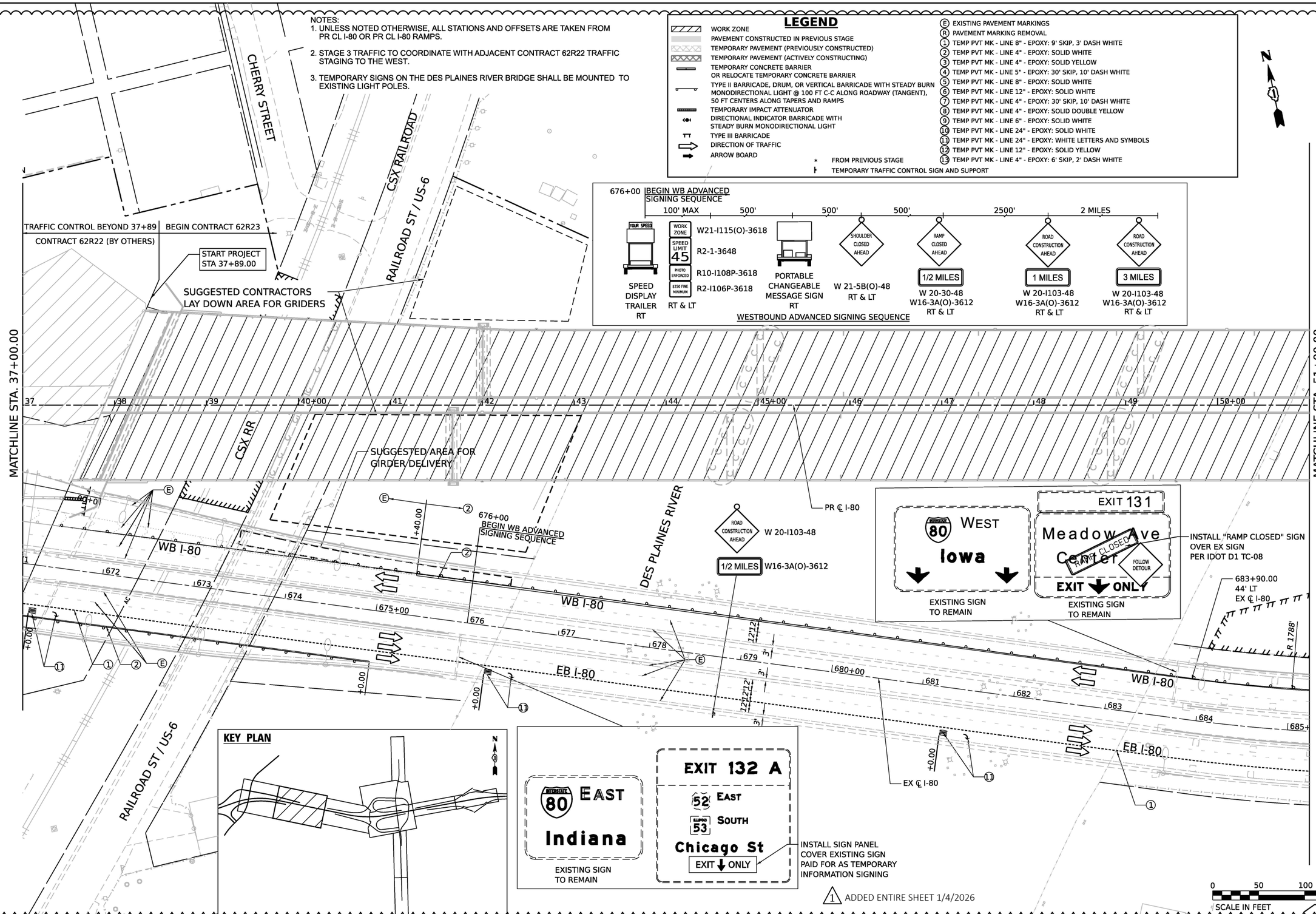

1 ADDED ENTIRE SHEET 1/4/2026

MODEL: Default
FILE NAME: pw://transystems-pw.bentley.com:transyscorp-pw1-hosted/Documents/Projects_2018/CH401/401180022/03-WSP/CAD/62R23-R8-1/Sheets/Civil/D162R23-sht-staging2-2

WSP USA Inc.
30 N. LASALLE STREET
SUITE 4200
CHICAGO, IL 60602
TEL: (312) 782-8150

USER NAME = USGP718052	DESIGNED - HA	REVISED - 1 01/30/2026	
	DRAWN - JFA	REVISED -	
PLOT SCALE = 100.000 ' / in.	CHECKED - SW	REVISED -	
PLOT DATE = 1/28/2026	DATE - 11/07/2025	REVISED -	

STATE OF ILLINOIS
DEPARTMENT OF TRANSPORTATION

SUGGESTED STAGES OF CONSTRUCTION AND TRAFFIC CONTROL
STAGE 2A

SCALE: 1" = 50' | SHEET 2 OF 3 SHEETS | STA. TO STA.

F.A.I. RTE.	SECTION	COUNTY	TOTAL SHEETS	SHEET NO.
80	FAI 80 21 STRUCTURE 2	WILL	1230	188B
		CONTRACT NO. 62R23		
		ILLINOIS	FED. AID PROJECT	

ADDITIONAL GUIDE SIGN MODIFICATIONS

EXIT 132 A-B
Chicago St
1 MILE

EXISTING EB I-80 POST-MOUNTED SIGN TO REMAIN 1 MILE WEST OF CHICAGO STREET INTERCHANGE

EXIT 132 A
Chicago St
EXIT ONLY

EXISTING EB I-80 OVERHEAD SIGN TO REMAIN AT WEST END OF DES PLAINES RIVER BRIDGE TRUSS

FOR IMFORMATION ONLY SEE 62F94 PLANS FOR DETAILS

NOTES:
1. UNLESS NOTED OTHERWISE, ALL STATIONS AND OFFSETS ARE TAKEN FROM PR CL I-80 OR PR CL I-80 RAMPS.
2. STAGE 3 TRAFFIC TO COORDINATE WITH ADJACENT CONTRACT 62R22 TRAFFIC STAGING TO THE WEST AND 62F94 TO THE EAST.
3. TEMPORARY SIGNS ON THE DES PLAINES RIVER BRIDGE SHALL BE MOUNTED TO EXISTING LIGHT POLES.

LEGEND

- WORK ZONE
- PAVEMENT CONSTRUCTED IN PREVIOUS STAGE
- TEMPORARY PAVEMENT (PREVIOUSLY CONSTRUCTED)
- TEMPORARY PAVEMENT (ACTIVELY CONSTRUCTING)
- TEMPORARY CONCRETE BARRIER OR RELOCATE TEMPORARY CONCRETE BARRIER
- TYPE II BARRICADE, DRUM, OR VERTICAL BARRICADE WITH STEADY BURN MONODIRECTIONAL LIGHT @ 100 FT C-C ALONG ROADWAY (TANGENT), 50 FT CENTERS ALONG TAPERS AND RAMPS
- TEMPORARY IMPACT ATTENUATOR
- DIRECTIONAL INDICATOR BARRICADE WITH STEADY BURN MONODIRECTIONAL LIGHT
- TYPE III BARRICADE
- DIRECTION OF TRAFFIC
- ARROW BOARD
- * FROM PREVIOUS STAGE
- TEMPORARY TRAFFIC CONTROL SIGN AND SUPPORT

(E) EXISTING PAVEMENT MARKINGS
(R) PAVEMENT MARKING REMOVAL
(1) TEMP PVT MK - LINE 8" - EPOXY: 9' SKIP, 3' DASH WHITE
(2) TEMP PVT MK - LINE 4" - EPOXY: SOLID WHITE
(3) TEMP PVT MK - LINE 4" - EPOXY: SOLID YELLOW
(4) TEMP PVT MK - LINE 5" - EPOXY: 30' SKIP, 10' DASH WHITE
(5) TEMP PVT MK - LINE 8" - EPOXY: SOLID WHITE
(6) TEMP PVT MK - LINE 12" - EPOXY: SOLID WHITE
(7) TEMP PVT MK - LINE 4" - EPOXY: 30' SKIP, 10' DASH WHITE
(8) TEMP PVT MK - LINE 4" - EPOXY: SOLID DOUBLE YELLOW
(9) TEMP PVT MK - LINE 6" - EPOXY: SOLID WHITE
(10) TEMP PVT MK - LINE 24" - EPOXY: SOLID WHITE
(11) TEMP PVT MK - LINE 24" - EPOXY: WHITE LETTERS AND SYMBOLS
(12) TEMP PVT MK - LINE 12" - EPOXY: SOLID YELLOW
(13) TEMP PVT MK - LINE 4" - EPOXY: 6' SKIP, 2' DASH WHITE

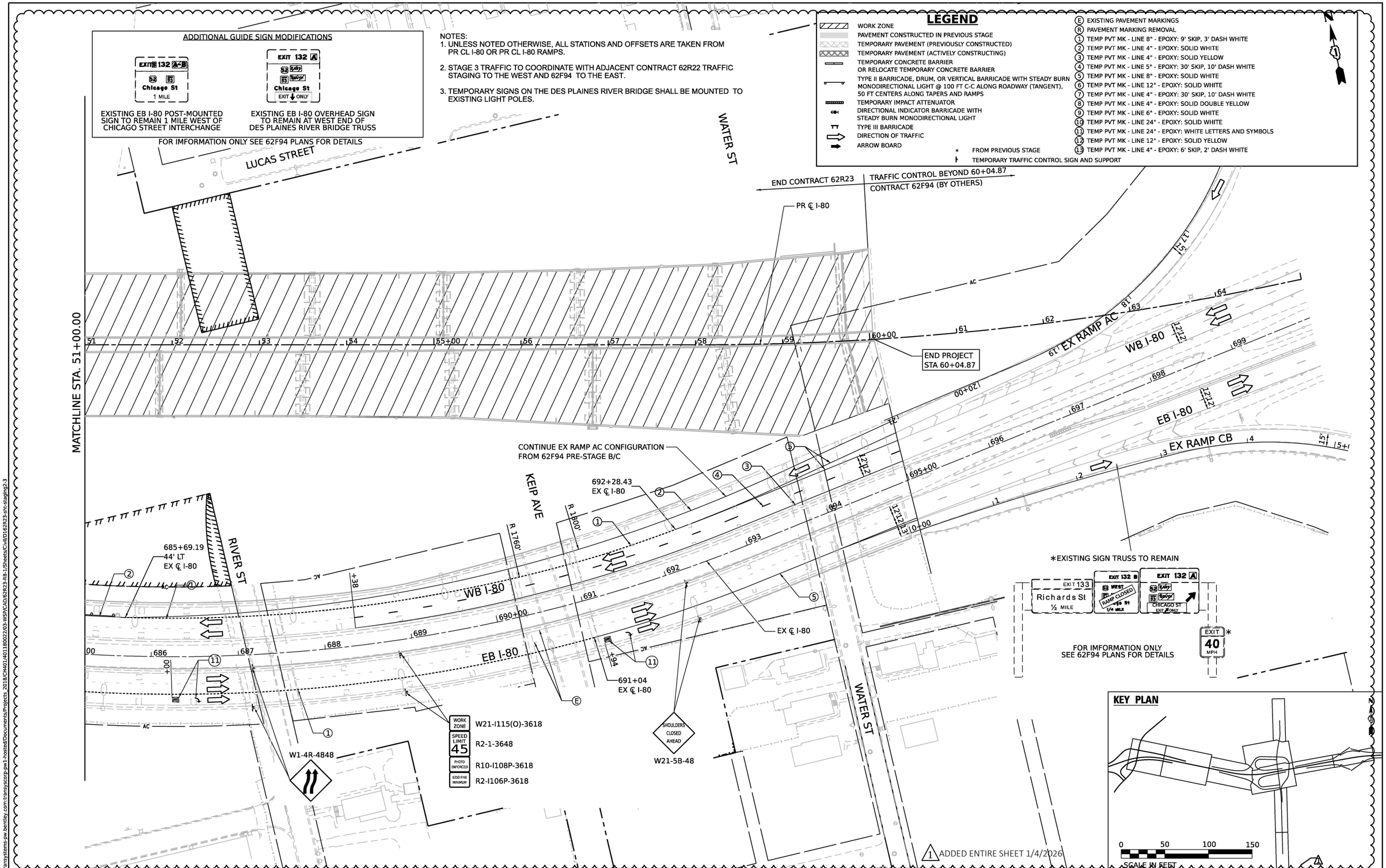

1 ADDED ENTIRE SHEET 1/4/2026

WSP USA Inc.
30 N. LASALLE STREET
SUITE 4200
CHICAGO, IL 60602
TEL: (312) 782-8150

USER NAME = USGP718052	DESIGNED - HA	REVISED - 1 01/30/2026	STATE OF ILLINOIS DEPARTMENT OF TRANSPORTATION
	DRAWN - JFA	REVISED -	
PLOT SCALE = 100.000 ' / in.	CHECKED - SW	REVISED -	
PLOT DATE = 1/28/2026	DATE - 11/07/2025	REVISED -	

SUGGESTED STAGES OF CONSTRUCTION AND TRAFFIC CONTROL
STAGE 2A

SCALE: 1" = 50' | SHEET 3 OF 3 SHEETS | STA. TO STA.

F.A.I. RTE.	SECTION	COUNTY	TOTAL SHEETS	SHEET NO.
80	FAI 80 21 STRUCTURE 2	WILL	1230	188C
		CONTRACT NO. 62R23		
		ILLINOIS	FED. AID PROJECT	

MODEL: Default
FILE NAME: pw://transystems-pw.bentley.com:transyscorp-pw1-hosted/Documents/Projects_2018/CH401/401180022/03-WSP/CAD/62R23-RB-1/Sheets/Civil/D162R23-sht-staging2-3

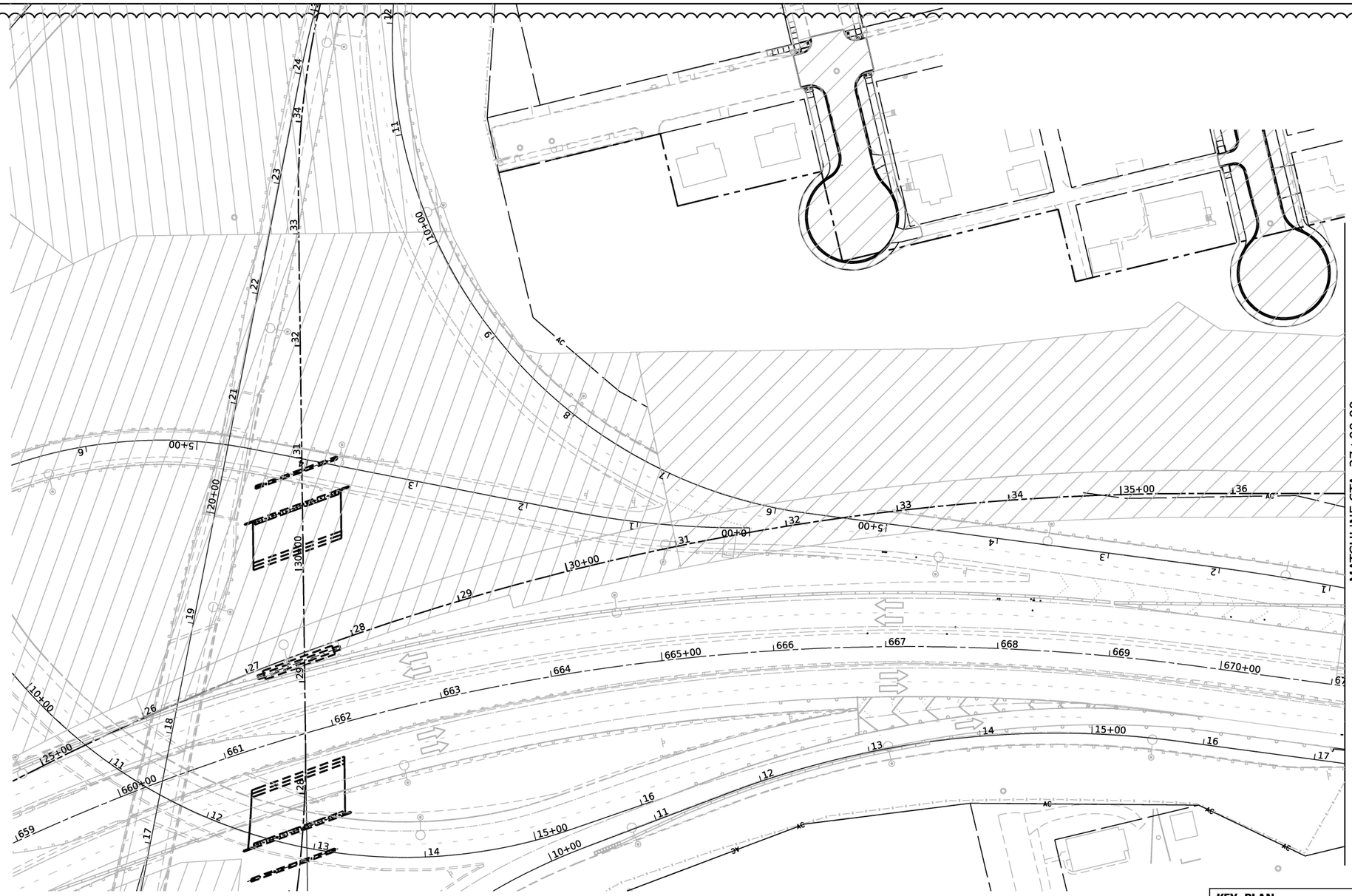

NOTE
- UNLESS NOTED OTHERWISE, ALL STATIONS AND OFFSETS ARE TAKEN FROM PR CL I-80 OR PR CL I-80 RAMPS

LEGEND

- WORK ZONE
- PAVEMENT CONSTRUCTED IN PREVIOUS STAGE
- TEMPORARY PAVEMENT (PREVIOUSLY CONSTRUCTED)
- TEMPORARY PAVEMENT (ACTIVELY CONSTRUCTING)
- TEMPORARY CONCRETE BARRIER OR RELOCATE TEMPORARY CONCRETE BARRIER
- TYPE II BARRICADE, DRUM, OR VERTICAL BARRICADE WITH STEADY BURN MONODIRECTIONAL LIGHT @ 100 FT C-C ALONG ROADWAY (TANGENT), 50 FT CENTERS ALONG TAPERS AND RAMPS
- TEMPORARY IMPACT ATTENUATOR
- DIRECTIONAL INDICATOR BARRICADE WITH STEADY BURN MONODIRECTIONAL LIGHT
- TYPE III BARRICADE
- DIRECTION OF TRAFFIC
- ARROW BOARD

* FROM PREVIOUS STAGE
* TEMPORARY TRAFFIC CONTROL SIGN AND SUPPORT

(E) EXISTING PAVEMENT MARKINGS
(R) PAVEMENT MARKING REMOVAL
(1) TEMP PVT MK - LINE 8" - EPOXY: 9' SKIP, 3' DASH WHITE
(2) TEMP PVT MK - LINE 4" - EPOXY: SOLID WHITE
(3) TEMP PVT MK - LINE 4" - EPOXY: SOLID YELLOW
(4) TEMP PVT MK - LINE 5" - EPOXY: 30' SKIP, 10' DASH WHITE
(5) TEMP PVT MK - LINE 8" - EPOXY: SOLID WHITE
(6) TEMP PVT MK - LINE 12" - EPOXY: SOLID WHITE
(7) TEMP PVT MK - LINE 4" - EPOXY: 30' SKIP, 10' DASH WHITE
(8) TEMP PVT MK - LINE 4" - EPOXY: SOLID DOUBLE YELLOW
(9) TEMP PVT MK - LINE 6" - EPOXY: SOLID WHITE
(10) TEMP PVT MK - LINE 24" - EPOXY: SOLID WHITE
(11) TEMP PVT MK - LINE 24" - EPOXY: WHITE LETTERS AND SYMBOLS
(12) TEMP PVT MK - LINE 12" - EPOXY: SOLID YELLOW
(13) TEMP PVT MK - LINE 4" - EPOXY: 6' SKIP, 2' DASH WHITE

1 ADDED ENTIRE SHEET 1/4/2026

N

0 50 100 150
SCALE IN FEET

KEY PLAN

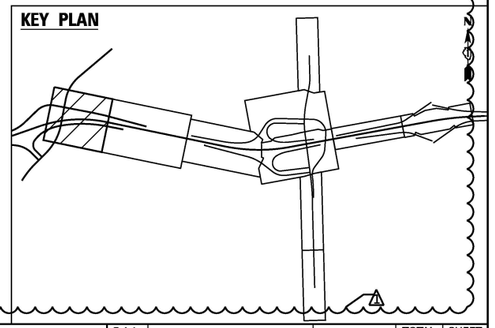

MODEL: Default
FILE NAME: pw://transystems-pw.bentley.com:transyscorp-pw1-hosted/Documents/Projects_2018/CH401/401180022/03-WSP/CAD/62R23-RB-1/Sheets/Civil/D162R23-sht-staging2B-1

WSP USA Inc.
30 N. LASALLE STREET
SUITE 4200
CHICAGO, IL 60602
TEL: (312) 782-8150

USER NAME = USGP718052	DESIGNED - HA	REVISED - 1 01/30/2026	
	DRAWN - JFA	REVISED -	
PLOT SCALE = 100.000 ' / in.	CHECKED - SW	REVISED -	
PLOT DATE = 1/28/2026	DATE - 11/07/2025	REVISED -	

STATE OF ILLINOIS
DEPARTMENT OF TRANSPORTATION

SUGGESTED STAGES OF CONSTRUCTION AND TRAFFIC CONTROL
STAGE 2B

SCALE: 1" = 50' | SHEET 1 OF 3 SHEETS | STA. TO STA.

F.A.I. RTE.	SECTION	COUNTY	TOTAL SHEETS	SHEET NO.
80	FAI 80 21 STRUCTURE 2	WILL	1230	188D
		CONTRACT NO. 62R23		
		ILLINOIS	FED. AID PROJECT	

NOTES:
1. UNLESS NOTED OTHERWISE, ALL STATIONS AND OFFSETS ARE TAKEN FROM PR CL I-80 OR PR CL I-80 RAMPS.
2. STAGE 3 TRAFFIC TO COORDINATE WITH ADJACENT CONTRACT 62R22 TRAFFIC STAGING TO THE WEST.
3. TEMPORARY SIGNS ON THE DES PLAINES RIVER BRIDGE SHALL BE MOUNTED TO EXISTING LIGHT POLES.

LEGEND

- WORK ZONE
- PAVEMENT CONSTRUCTED IN PREVIOUS STAGE
- TEMPORARY PAVEMENT (PREVIOUSLY CONSTRUCTED)
- TEMPORARY PAVEMENT (ACTIVELY CONSTRUCTING)
- TEMPORARY CONCRETE BARRIER OR RELOCATE TEMPORARY CONCRETE BARRIER
- TYPE II BARRICADE, DRUM, OR VERTICAL BARRICADE WITH STEADY BURN MONODIRECTIONAL LIGHT @ 100 FT C-C ALONG ROADWAY (TANGENT), 50 FT CENTERS ALONG TAPERS AND RAMPS
- TEMPORARY IMPACT ATTENUATOR
- DIRECTIONAL INDICATOR BARRICADE WITH STEADY BURN MONODIRECTIONAL LIGHT
- TYPE III BARRICADE
- DIRECTION OF TRAFFIC
- ARROW BOARD
- * FROM PREVIOUS STAGE
- TEMPORARY TRAFFIC CONTROL SIGN AND SUPPORT
- (E) EXISTING PAVEMENT MARKINGS
- (R) PAVEMENT MARKING REMOVAL
- (1) TEMP PVT MK - LINE 8" - EPOXY: 9' SKIP, 3' DASH WHITE
- (2) TEMP PVT MK - LINE 4" - EPOXY: SOLID WHITE
- (3) TEMP PVT MK - LINE 4" - EPOXY: SOLID YELLOW
- (4) TEMP PVT MK - LINE 5" - EPOXY: 30' SKIP, 10' DASH WHITE
- (5) TEMP PVT MK - LINE 8" - EPOXY: SOLID WHITE
- (6) TEMP PVT MK - LINE 12" - EPOXY: SOLID WHITE
- (7) TEMP PVT MK - LINE 4" - EPOXY: 30' SKIP, 10' DASH WHITE
- (8) TEMP PVT MK - LINE 4" - EPOXY: SOLID DOUBLE YELLOW
- (9) TEMP PVT MK - LINE 6" - EPOXY: SOLID WHITE
- (10) TEMP PVT MK - LINE 24" - EPOXY: SOLID WHITE
- (11) TEMP PVT MK - LINE 24" - EPOXY: WHITE LETTERS AND SYMBOLS
- (12) TEMP PVT MK - LINE 12" - EPOXY: SOLID YELLOW
- (13) TEMP PVT MK - LINE 4" - EPOXY: 6' SKIP, 2' DASH WHITE

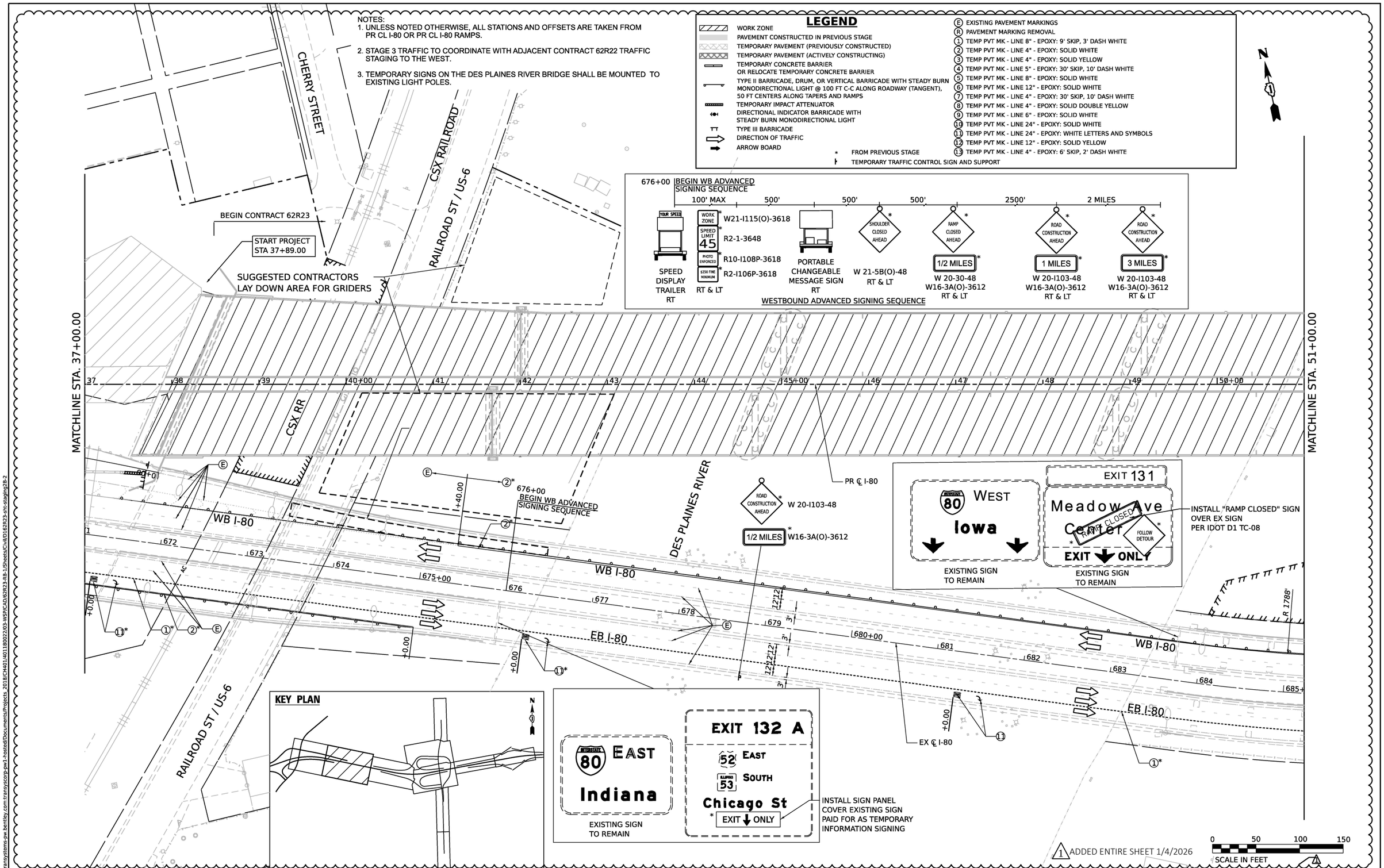

676+00 BEGIN WB ADVANCED SIGNING SEQUENCE

100' MAX	500'	500'	500'	2500'	2 MILES
SPEED DISPLAY TRAILER RT	W21-I115(O)-3618; R2-1-3648; R10-I108P-3618; R2-I106P-3618 RT & LT	PORTABLE CHANGEABLE MESSAGE SIGN RT	W 21-5B(O)-48 RT & LT	1/2 MILES W 20-30-48 W16-3A(O)-3612 RT & LT	1 MILES W 20-I103-48 W16-3A(O)-3612 RT & LT	3 MILES W 20-I103-48 W16-3A(O)-3612 RT & LT

WESTBOUND ADVANCED SIGNING SEQUENCE

MODEL: Default
FILE NAME: pw://transystems-pw.bentley.com:transyscorp-pw1-hosted/Documents/Projects_2018/CH401/401180022/03-WSP/CAD/62R23-R8-1/Sheets/Civil/D1 62R23-sht-staging2B-2

WSP USA Inc.
30 N. LASALLE STREET
SUITE 4200
CHICAGO, IL 60602
TEL: (312) 782-8150

USER NAME = USGP718052	DESIGNED - HA	REVISED - 1 01/30/2026	
	DRAWN - JFA	REVISED -	
PLOT SCALE = 100.000 ' / in.	CHECKED - SW	REVISED -	
PLOT DATE = 1/28/2026	DATE - 11/07/2025	REVISED -	

STATE OF ILLINOIS
DEPARTMENT OF TRANSPORTATION

SUGGESTED STAGES OF CONSTRUCTION AND TRAFFIC CONTROL STAGE 2B

SCALE: 1" = 50' | SHEET 2 OF 3 SHEETS | STA. TO STA.

F.A.I. RTE.	SECTION	COUNTY	TOTAL SHEETS	SHEET NO.
80	FAI 80 21 STRUCTURE 2	WILL	1230	188E

CONTRACT NO. 62R23
ILLINOIS | FED. AID PROJECT

ADDITIONAL GUIDE SIGN MODIFICATIONS

EXIT 132 A-B
53 55
Chicago St
1 MILE

EXISTING EB I-80 POST-MOUNTED SIGN TO REMAIN 1 MILE WEST OF CHICAGO STREET INTERCHANGE

EXIT 132 A
53 Safety
55 Safety
Chicago St
EXIT ONLY

EXISTING EB I-80 OVERHEAD SIGN TO REMAIN AT WEST END OF DES PLAINES RIVER BRIDGE TRUSS

FOR IMFORMATION ONLY SEE 62F94 PLANS FOR DETAILS

NOTES:
1. UNLESS NOTED OTHERWISE, ALL STATIONS AND OFFSETS ARE TAKEN FROM PR CL I-80 OR PR CL I-80 RAMPS.
2. STAGE 3 TRAFFIC TO COORDINATE WITH ADJACENT CONTRACT 62R22 TRAFFIC STAGING TO THE WEST AND 62F94 TO THE EAST.
3. TEMPORARY SIGNS ON THE DES PLAINES RIVER BRIDGE SHALL BE MOUNTED TO EXISTING LIGHT POLES.

LEGEND

- WORK ZONE
- PAVEMENT CONSTRUCTED IN PREVIOUS STAGE
- TEMPORARY PAVEMENT (PREVIOUSLY CONSTRUCTED)
- TEMPORARY PAVEMENT (ACTIVELY CONSTRUCTING)
- TEMPORARY CONCRETE BARRIER OR RELOCATE TEMPORARY CONCRETE BARRIER
- TYPE II BARRICADE, DRUM, OR VERTICAL BARRICADE WITH STEADY BURN MONODIRECTIONAL LIGHT @ 100 FT C-C ALONG ROADWAY (TANGENT), 50 FT CENTERS ALONG TAPERS AND RAMPS
- TEMPORARY IMPACT ATTENUATOR
- DIRECTIONAL INDICATOR BARRICADE WITH STEADY BURN MONODIRECTIONAL LIGHT
- TYPE III BARRICADE
- DIRECTION OF TRAFFIC
- ARROW BOARD
- * FROM PREVIOUS STAGE
- TEMPORARY TRAFFIC CONTROL SIGN AND SUPPORT

(E) EXISTING PAVEMENT MARKINGS
(R) PAVEMENT MARKING REMOVAL
(1) TEMP PVT MK - LINE 8" - EPOXY: 9' SKIP, 3' DASH WHITE
(2) TEMP PVT MK - LINE 4" - EPOXY: SOLID WHITE
(3) TEMP PVT MK - LINE 4" - EPOXY: SOLID YELLOW
(4) TEMP PVT MK - LINE 5" - EPOXY: 30' SKIP, 10' DASH WHITE
(5) TEMP PVT MK - LINE 8" - EPOXY: SOLID WHITE
(6) TEMP PVT MK - LINE 12" - EPOXY: SOLID WHITE
(7) TEMP PVT MK - LINE 4" - EPOXY: 30' SKIP, 10' DASH WHITE
(8) TEMP PVT MK - LINE 4" - EPOXY: SOLID DOUBLE YELLOW
(9) TEMP PVT MK - LINE 6" - EPOXY: SOLID WHITE
(10) TEMP PVT MK - LINE 24" - EPOXY: SOLID WHITE
(11) TEMP PVT MK - LINE 24" - EPOXY: WHITE LETTERS AND SYMBOLS
(12) TEMP PVT MK - LINE 12" - EPOXY: SOLID YELLOW
(13) TEMP PVT MK - LINE 4" - EPOXY: 6' SKIP, 2' DASH WHITE

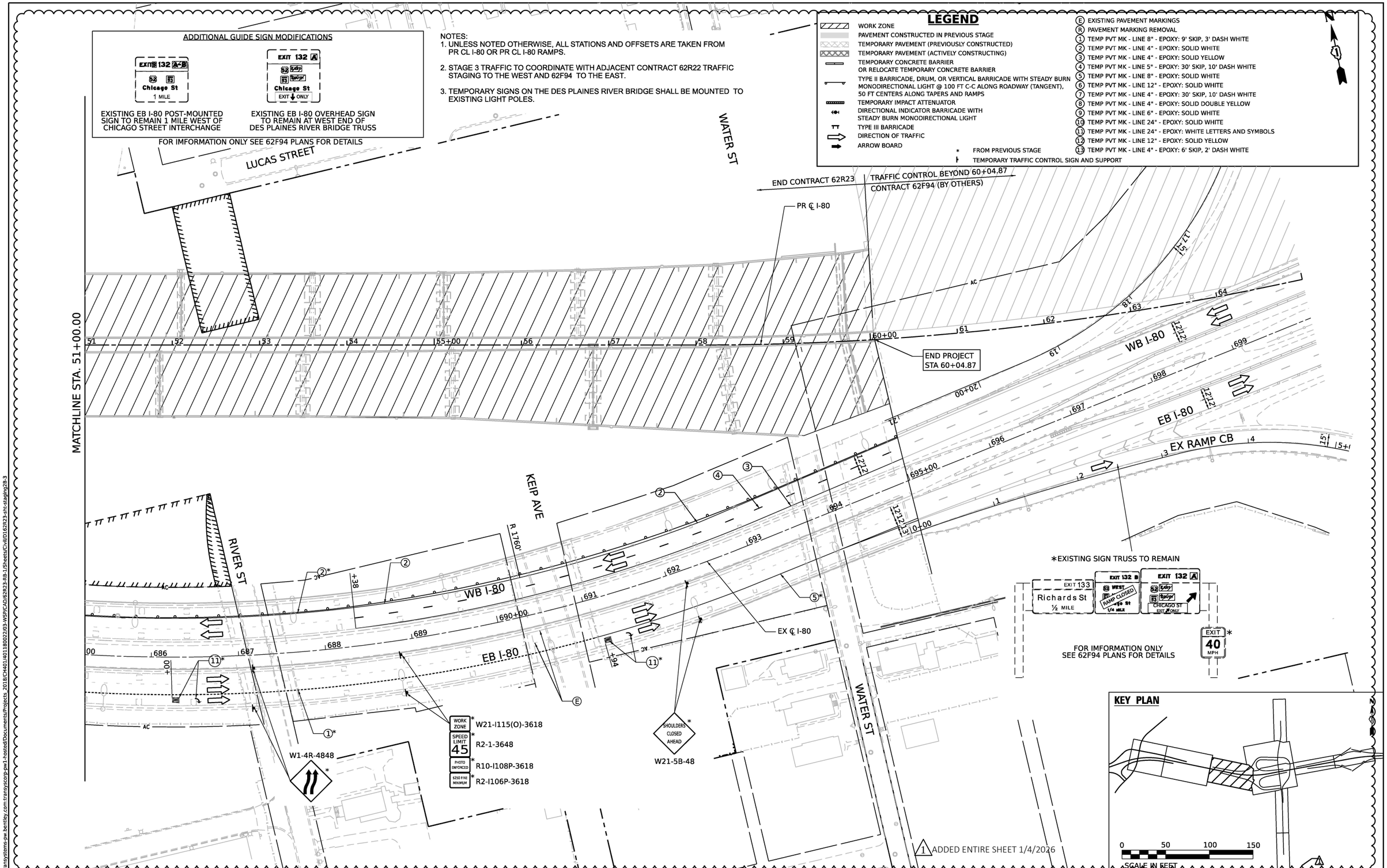

1 ADDED ENTIRE SHEET 1/4/2026

MODEL: Default
FILE NAME: pw://transystems-pw.bentley.com:transyscorp-pw1-hosted/Documents/Projects_2018/CH401/401180022/03-WSP/CAD/62R23-RB-1/Sheets/Civil/D162R23-sht-staging2B-3

WSP USA Inc.
30 N. LASALLE STREET
SUITE 4200
CHICAGO, IL 60602
TEL: (312) 782-8150

USER NAME = USGP718052	DESIGNED - HA	REVISED - 1 01/30/2026	
	DRAWN - JFA	REVISED -	
PLOT SCALE = 100.000 ' / in.	CHECKED - SW	REVISED -	
PLOT DATE = 1/28/2026	DATE - 11/07/2025	REVISED -	

STATE OF ILLINOIS
DEPARTMENT OF TRANSPORTATION

SUGGESTED STAGES OF CONSTRUCTION AND TRAFFIC CONTROL
STAGE 2B

SCALE: 1" = 50' | SHEET 3 OF 3 SHEETS | STA. TO STA.

F.A.I. RTE.	SECTION	COUNTY	TOTAL SHEETS	SHEET NO.
80	FAI 80 21 STRUCTURE 2	WILL	1230	188F
		CONTRACT NO. 62R23		
	ILLINOIS	FED. AID PROJECT		

NOTES:
1. UNLESS NOTED OTHERWISE, ALL STATIONS AND OFFSETS ARE TAKEN FROM PR CL I-80 OR PR CL I-80 RAMPS.
2. STAGE 3 TRAFFIC TO COORDINATE WITH ADJACENT CONTRACT 62R22 TRAFFIC STAGING TO THE WEST.
3. TEMPORARY SIGNS ON THE DES PLAINES RIVER BRIDGE SHALL BE MOUNTED TO EXISTING LIGHT POLES.
4. MAINTENANCE OF TRAFFIC ON THIS SHEET IS PROVIDED BY 62R22

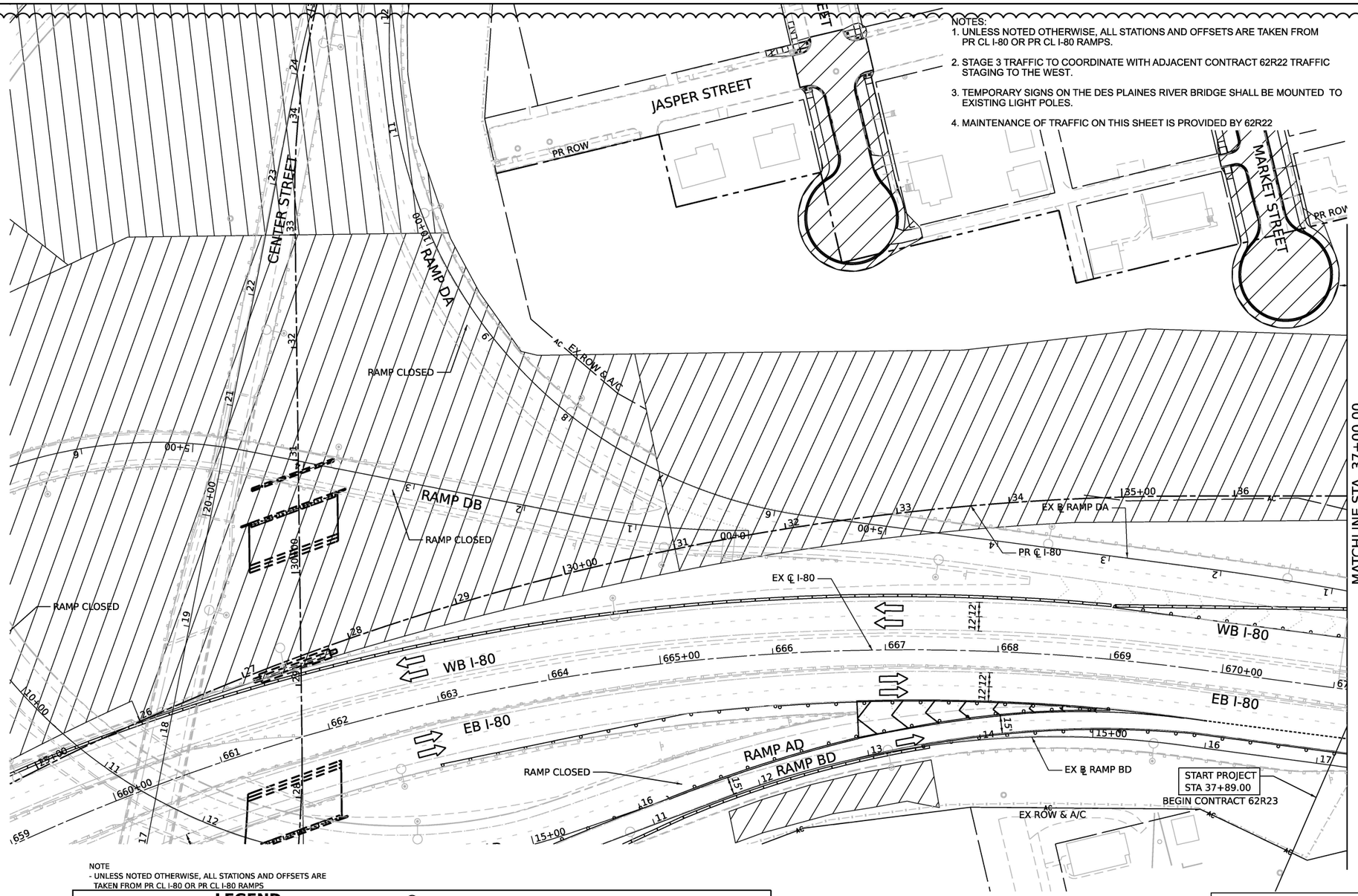

NOTE
- UNLESS NOTED OTHERWISE, ALL STATIONS AND OFFSETS ARE TAKEN FROM PR CL I-80 OR PR CL I-80 RAMPS

LEGEND

- WORK ZONE
- PAVEMENT CONSTRUCTED IN PREVIOUS STAGE
- TEMPORARY PAVEMENT (PREVIOUSLY CONSTRUCTED)
- TEMPORARY PAVEMENT (ACTIVELY CONSTRUCTING)
- TEMPORARY CONCRETE BARRIER OR RELOCATE TEMPORARY CONCRETE BARRIER
- TYPE II BARRICADE, DRUM, OR VERTICAL BARRICADE WITH STEADY BURN MONODIRECTIONAL LIGHT @ 100 FT C-C ALONG ROADWAY (TANGENT), 50 FT CENTERS ALONG TAPERS AND RAMPS
- TEMPORARY IMPACT ATTENUATOR
- DIRECTIONAL INDICATOR BARRICADE WITH STEADY BURN MONODIRECTIONAL LIGHT
- TYPE III BARRICADE
- DIRECTION OF TRAFFIC
- ARROW BOARD

* FROM PREVIOUS STAGE

- (E) EXISTING PAVEMENT MARKINGS
- (R) PAVEMENT MARKING REMOVAL
- (1) TEMP PVT MK - LINE 8" - EPOXY: 9' SKIP, 3' DASH WHITE
- (2) TEMP PVT MK - LINE 4" - EPOXY: SOLID WHITE
- (3) TEMP PVT MK - LINE 4" - EPOXY: SOLID YELLOW
- (4) TEMP PVT MK - LINE 5" - EPOXY: 30' SKIP, 10' DASH WHITE
- (5) TEMP PVT MK - LINE 8" - EPOXY: SOLID WHITE
- (6) TEMP PVT MK - LINE 12" - EPOXY: SOLID WHITE
- (7) TEMP PVT MK - LINE 4" - EPOXY: 30' SKIP, 10' DASH WHITE
- (8) TEMP PVT MK - LINE 4" - EPOXY: SOLID DOUBLE YELLOW
- (9) TEMP PVT MK - LINE 6" - EPOXY: SOLID WHITE
- (10) TEMP PVT MK - LINE 24" - EPOXY: SOLID WHITE
- (11) TEMP PVT MK - LINE 24" - EPOXY: WHITE LETTERS AND SYMBOLS
- (12) TEMP PVT MK - LINE 12" - EPOXY: SOLID YELLOW
- (13) TEMP PVT MK - LINE 4" - EPOXY: 6' SKIP, 2' DASH WHITE

TEMPORARY TRAFFIC CONTROL SIGN AND SUPPORT

N

0 50 100 150
SCALE IN FEET

KEY PLAN

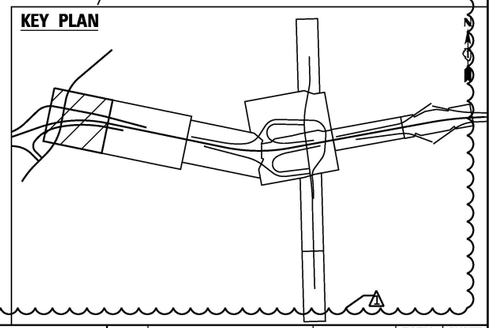

MODEL: Default
FILE NAME: pw://transystems-pw.bentley.com:transyscorp-pw1-hosted/Documents/Projects_2018/CH401/401180022/03-WSP/CAD/62R23-RB-1/Sheets/Civil/D162R23-ehc-staging3-1

WSP USA Inc.
30 N. LASALLE STREET
SUITE 4200
CHICAGO, IL 60602
TEL: (312) 782-8150

USER NAME = USGP718052	DESIGNED - HA	REVISED -	01/30/2026
	DRAWN - HA	REVISED -	
PLOT SCALE = 100.000 ' / in.	CHECKED - SW	REVISED -	
PLOT DATE = 1/28/2026	DATE - 11/07/2025	REVISED -	

STATE OF ILLINOIS
DEPARTMENT OF TRANSPORTATION

SUGGESTED STAGES OF CONSTRUCTION AND TRAFFIC CONTROL
STAGE 3

SCALE: 1" = 50' | SHEET 1 OF 3 SHEETS | STA. TO STA.

F.A.I. RTE.	SECTION	COUNTY	TOTAL SHEETS	SHEET NO.
80	FAI 80 21 STRUCTURE 2	WILL	1230	189
		CONTRACT NO. 62R23		
	ILLINOIS	FED. AID PROJECT		

NOTES:
1. UNLESS NOTED OTHERWISE, ALL STATIONS AND OFFSETS ARE TAKEN FROM PR CL I-80 OR PR CL I-80 RAMPS.
2. STAGE 3 TRAFFIC TO COORDINATE WITH ADJACENT CONTRACT 62R22 TRAFFIC STAGING TO THE WEST.
3. TEMPORARY SIGNS ON THE DES PLAINES RIVER BRIDGE SHALL BE MOUNTED EXISTING LIGHT POLES.

LEGEND

- WORK ZONE
- PAVEMENT CONSTRUCTED IN PREVIOUS STAGE
- TEMPORARY PAVEMENT (PREVIOUSLY CONSTRUCTED)
- TEMPORARY PAVEMENT (ACTIVELY CONSTRUCTING)
- TEMPORARY CONCRETE BARRIER OR RELOCATE TEMPORARY CONCRETE BARRIER
- TYPE II BARRICADE, DRUM, OR VERTICAL BARRICADE WITH STEADY BURN MONODIRECTIONAL LIGHT @ 100 FT C-C ALONG ROADWAY (TANGENT), 50 FT CENTERS ALONG TAPERS AND RAMPS
- TEMPORARY IMPACT ATTENUATOR
- DIRECTIONAL INDICATOR BARRICADE WITH STEADY BURN MONODIRECTIONAL LIGHT
- TYPE III BARRICADE
- DIRECTION OF TRAFFIC
- ARROW BOARD

* FROM PREVIOUS STAGE
TEMPORARY TRAFFIC CONTROL SIGN AND SUPPORT

(E) EXISTING PAVEMENT MARKINGS
(R) PAVEMENT MARKING REMOVAL
(1) TEMP PVT MK - LINE 8" - EPOXY: 9' SKIP, 3' DASH WHITE
(2) TEMP PVT MK - LINE 4" - EPOXY: SOLID WHITE
(3) TEMP PVT MK - LINE 4" - EPOXY: SOLID YELLOW
(4) TEMP PVT MK - LINE 5" - EPOXY: 30' SKIP, 10' DASH WHITE
(5) TEMP PVT MK - LINE 8" - EPOXY: SOLID WHITE
(6) TEMP PVT MK - LINE 12" - EPOXY: SOLID WHITE
(7) TEMP PVT MK - LINE 4" - EPOXY: 30' SKIP, 10' DASH WHITE
(8) TEMP PVT MK - LINE 4" - EPOXY: SOLID DOUBLE YELLOW
(9) TEMP PVT MK - LINE 6" - EPOXY: SOLID WHITE
(10) TEMP PVT MK - LINE 24" - EPOXY: SOLID WHITE
(11) TEMP PVT MK - LINE 24" - EPOXY: WHITE LETTERS AND SYMBOLS
(12) TEMP PVT MK - LINE 12" - EPOXY: SOLID YELLOW
(13) TEMP PVT MK - LINE 4" - EPOXY: 6' SKIP, 2' DASH WHITE

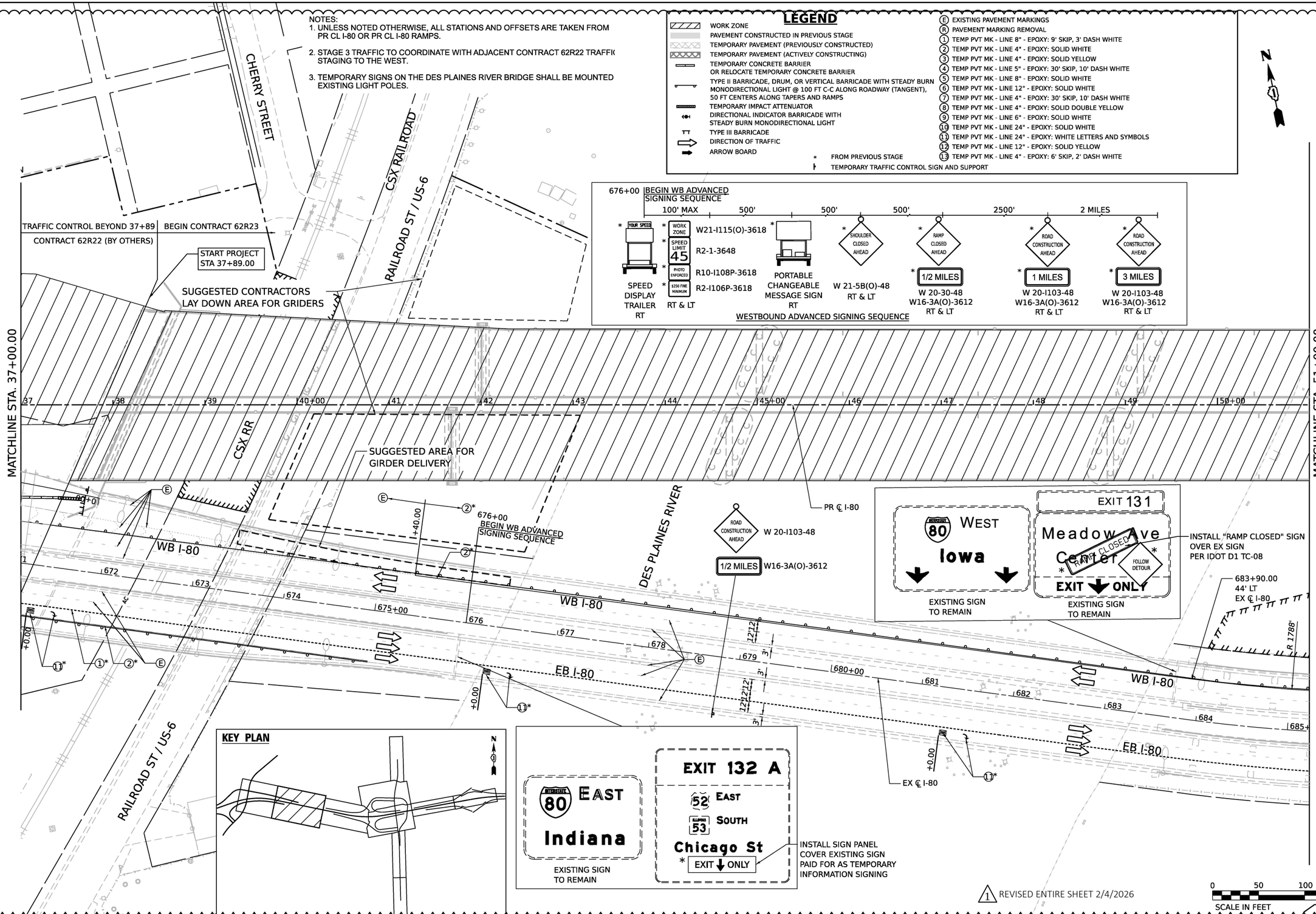

1 REVISED ENTIRE SHEET 2/4/2026

MODEL: Default
FILE NAME: pw://transystems-pw.bentley.com:transyscorp-pw1-hosted/Documents/Projects_2018/CH401/401180022/03-WSP/CAD/62R23-RB-1/Sheets/Civil/D162R23-sht-staging3-2

WSP USA Inc.
30 N. LASALLE STREET
SUITE 4200
CHICAGO, IL 60602
TEL: (312) 782-8150

USER NAME = USGP718052	DESIGNED - HA	REVISED - 1 01/30/2026	
	DRAWN - HA	REVISED -	
PLOT SCALE = 100.000 ' / in.	CHECKED - SW	REVISED -	
PLOT DATE = 1/28/2026	DATE - 11/07/2025	REVISED -	

STATE OF ILLINOIS
DEPARTMENT OF TRANSPORTATION

SUGGESTED STAGES OF CONSTRUCTION AND TRAFFIC CONTROL
STAGE 3

SCALE: 1" = 50' | SHEET 2 OF 3 SHEETS | STA. TO STA.

F.A.I. RTE.	SECTION	COUNTY	TOTAL SHEETS	SHEET NO.
80	FAI 80 21 STRUCTURE 2	WILL	1230	190
		CONTRACT NO. 62R23		
	ILLINOIS	FED. AID PROJECT		

ADDITIONAL GUIDE SIGN MODIFICATIONS

EXISTING EB I-80 POST-MOUNTED SIGN TO REMAIN 1 MILE WEST OF CHICAGO STREET INTERCHANGE

EXISTING EB I-80 OVERHEAD SIGN TO REMAIN AT WEST END OF DES PLAINES RIVER BRIDGE TRUSS

FOR IMFORMATION ONLY SEE 62F94 PLANS FOR DETAILS

NOTES:
1. UNLESS NOTED OTHERWISE, ALL STATIONS AND OFFSETS ARE TAKEN FROM PR CL I-80 OR PR CL I-80 RAMPS.
2. STAGE 3 TRAFFIC TO COORDINATE WITH ADJACENT CONTRACT 62R22 TRAFFIC STAGING TO THE WEST AND 62F94 TO THE EAST.
3. TEMPORARY SIGNS ON THE DES PLAINES RIVER BRIDGE SHALL BE MOUNTED TO EXISTING LIGHT POLES.

LEGEND

- WORK ZONE
- PAVEMENT CONSTRUCTED IN PREVIOUS STAGE
- TEMPORARY PAVEMENT (PREVIOUSLY CONSTRUCTED)
- TEMPORARY PAVEMENT (ACTIVELY CONSTRUCTING)
- TEMPORARY CONCRETE BARRIER OR RELOCATE TEMPORARY CONCRETE BARRIER
- TYPE II BARRICADE, DRUM, OR VERTICAL BARRICADE WITH STEADY BURN MONODIRECTIONAL LIGHT @ 100 FT C-C ALONG ROADWAY (TANGENT), 50 FT CENTERS ALONG TAPERS AND RAMPS
- TEMPORARY IMPACT ATTENUATOR
- DIRECTIONAL INDICATOR BARRICADE WITH STEADY BURN MONODIRECTIONAL LIGHT
- TYPE III BARRICADE
- DIRECTION OF TRAFFIC
- ARROW BOARD
- * FROM PREVIOUS STAGE
- TEMPORARY TRAFFIC CONTROL SIGN AND SUPPORT

(E) EXISTING PAVEMENT MARKINGS
(R) PAVEMENT MARKING REMOVAL
(1) TEMP PVT MK - LINE 8" - EPOXY: 9' SKIP, 3' DASH WHITE
(2) TEMP PVT MK - LINE 4" - EPOXY: SOLID WHITE
(3) TEMP PVT MK - LINE 4" - EPOXY: SOLID YELLOW
(4) TEMP PVT MK - LINE 5" - EPOXY: 30' SKIP, 10' DASH WHITE
(5) TEMP PVT MK - LINE 8" - EPOXY: SOLID WHITE
(6) TEMP PVT MK - LINE 12" - EPOXY: SOLID WHITE
(7) TEMP PVT MK - LINE 4" - EPOXY: 30' SKIP, 10' DASH WHITE
(8) TEMP PVT MK - LINE 4" - EPOXY: SOLID DOUBLE YELLOW
(9) TEMP PVT MK - LINE 6" - EPOXY: SOLID WHITE
(10) TEMP PVT MK - LINE 24" - EPOXY: SOLID WHITE
(11) TEMP PVT MK - LINE 24" - EPOXY: WHITE LETTERS AND SYMBOLS
(12) TEMP PVT MK - LINE 12" - EPOXY: SOLID YELLOW
(13) TEMP PVT MK - LINE 4" - EPOXY: 6' SKIP, 2' DASH WHITE

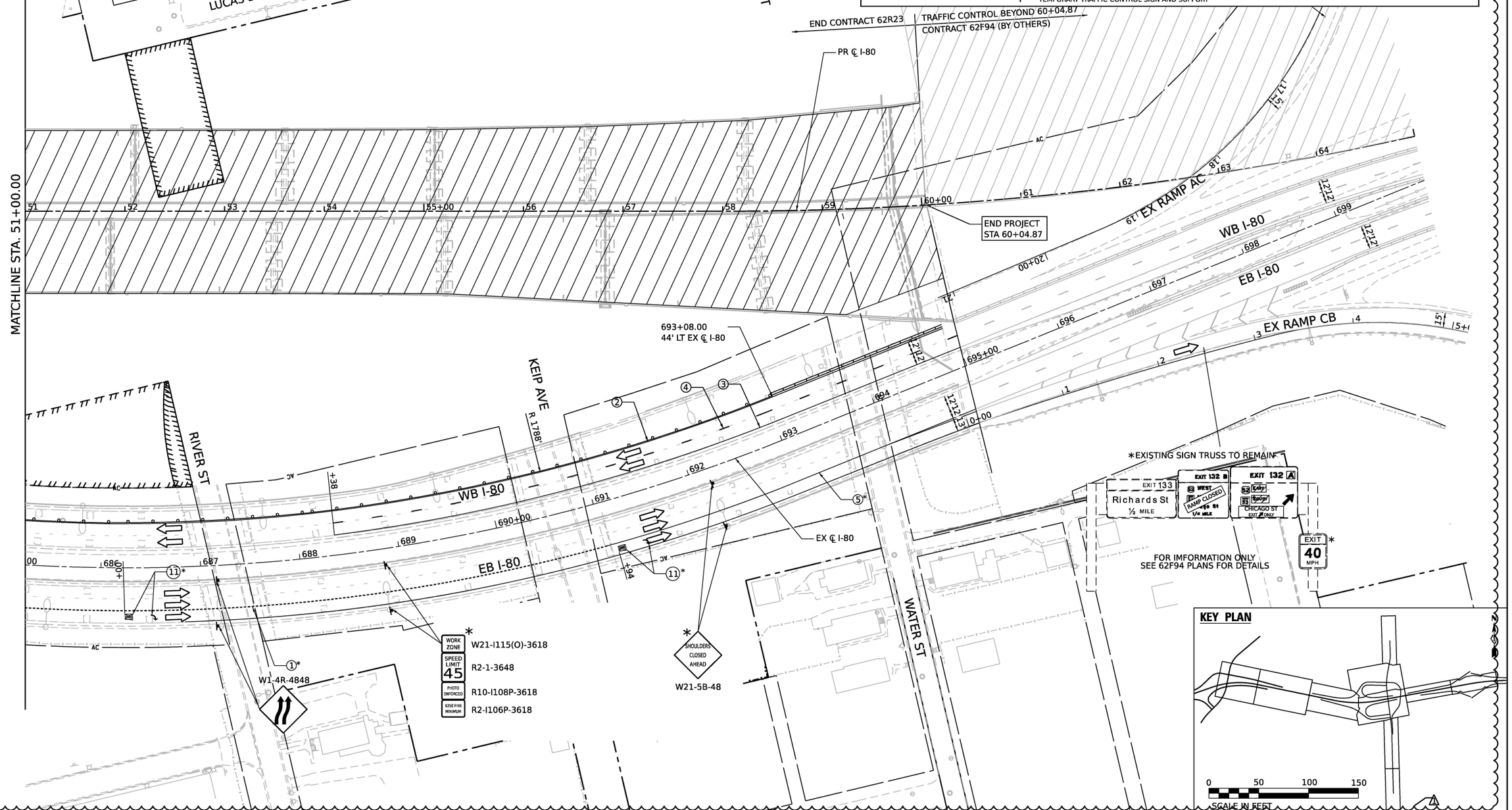

MODEL: Default
FILE NAME: pw://transystems-pw.bentley.com:transyscorp-pw1-hosted/Documents/Projects_2018/CH401/401180022/03-WSP/CAD/62R23-RB-1/Sheets/Civil/D162R23-sht-staging3-3

WSP USA Inc.
30 N. LASALLE STREET
SUITE 4200
CHICAGO, IL 60602
TEL: (312) 782-8150

USER NAME = USGP718052	DESIGNED - HA	REVISED - 1 01/30/2026	
	DRAWN - JFA	REVISED -	
PLOT SCALE = 100.000 ' / in.	CHECKED - SW	REVISED -	
PLOT DATE = 1/28/2026	DATE - 11/07/2025	REVISED -	

STATE OF ILLINOIS
DEPARTMENT OF TRANSPORTATION

SUGGESTED STAGES OF CONSTRUCTION AND TRAFFIC CONTROL
STAGE 3

SCALE: 1" = 50' | SHEET 3 OF 3 SHEETS | STA. TO STA.

F.A.I. RTE.	SECTION	COUNTY	TOTAL SHEETS	SHEET NO.
80	FAI 80 21 STRUCTURE 2	WILL	1230	191
		CONTRACT NO. 62R23		
		ILLINOIS	FED. AID PROJECT	

THIS SHEET DELETED

1

MODEL: Default
FILE NAME: pw://transystems-pw.bentley.com:transyscorp-pw1-hosted/Documents/Projects_2018/CH401/401180022/03-WSP/CAD/62R23-RB-1/Sheets/CMD162R23-sht-EAST-MOTStage3-02.dgn

USER NAME = tmmroz	DESIGNED - JAP	REVISED - 1 01/30/2026	STATE OF ILLINOIS DEPARTMENT OF TRANSPORTATION	SUGGESTED STAGES OF CONSTRUCTION AND TRAFFIC CONTROL STAGE 3	F.A.I. RTE. 80 / SECTION FAI 80 21 STRUCTURE 2 / COUNTY WILL / TOTAL SHEETS 1230 / SHEET NO. 192
	DRAWN - TMM	REVISED -			CONTRACT NO. 62R23
PLOT SCALE = 100.000 ' / in.	CHECKED - JIR	REVISED -			
PLOT DATE = 1/28/2026	DATE - 11/7/2025	REVISED -		SCALE: 1" = 50' / SHEET 4 OF 8 SHEETS / STA. / TO STA.	ILLINOIS / FED. AID PROJECT

THIS SHEET DELETED

MODEL: Default
FILE NAME: pw://transystems-pw.bentley.com:transyscorp-pw1-hosted/Documents/Projects_2018/CH401/401180022/03-WSP/CAD/62R23-RB-1/Sheets/CMD162R23-sht-EAST-MOTStage3-03.dgn

USER NAME = tmmroz	DESIGNED - JAP	REVISED - 1 01/30/2026	STATE OF ILLINOIS DEPARTMENT OF TRANSPORTATION	SUGGESTED STAGES OF CONSTRUCTION AND TRAFFIC CONTROL STAGE 3	F.A.I. RTE. 80 / SECTION FAI 80 21 STRUCTURE 2 / COUNTY WILL / TOTAL SHEETS 1230 / SHEET NO. 193
	DRAWN - TMM	REVISED -			CONTRACT NO. 62R23
PLOT SCALE = 100.000 ' / in.	CHECKED - JIR	REVISED -			
PLOT DATE = 1/28/2026	DATE - 11/7/2025	REVISED -		SCALE: 1" = 50' / SHEET 5 OF 8 SHEETS / STA. / TO STA.	ILLINOIS / FED. AID PROJECT

THIS SHEET DELETED

1 DELETED ENTIRE SHEET 2/4/2026

1

MODEL: Default
FILE NAME: pw://transystems-pw.bentley.com:transyscorp-pw1-hosted/Documents/Projects_2018/CH401/401180022/03-WSP/CAD/62R23-RB-1/Sheets/CMD162R23-sht-EAST-MOTStage3-04.dgn

USER NAME = tmmroz	DESIGNED - JAP	REVISED - 1 01/30/2026	STATE OF ILLINOIS DEPARTMENT OF TRANSPORTATION	SUGGESTED STAGES OF CONSTRUCTION AND TRAFFIC CONTROL STAGE 3	F.A.I. RTE. 80 / SECTION FAI 80 21 STRUCTURE 2 / COUNTY WILL / TOTAL SHEETS 1230 / SHEET NO. 194
	DRAWN - TMM	REVISED -			CONTRACT NO. 62R23
PLOT SCALE = 100.000 ' / in.	CHECKED - JIR	REVISED -			
PLOT DATE = 1/28/2026	DATE - 11/7/2025	REVISED -		SCALE: 1" = 50' / SHEET 6 OF 8 SHEETS / STA. / TO STA.	ILLINOIS / FED. AID PROJECT

THIS SHEET DELETED

1 DELETED ENTIRE SHEET 2/4/2026

1

MODEL: Default
FILE NAME: pw://transystems-pw.bentley.com:transyscorp-pw1-hosted/Documents/Projects_2018/CH401/401180022/03-WSP/CAD/62R23-RB-1/Sheets/CMD162R23-sht-EAST-MOTStage3-05.dgn

USER NAME = tmmroz	DESIGNED - JAP	REVISED - 1 01/30/2026	STATE OF ILLINOIS DEPARTMENT OF TRANSPORTATION	SUGGESTED STAGES OF CONSTRUCTION AND TRAFFIC CONTROL STAGE 3	F.A.I. RTE. 80 / SECTION FAI 80 21 STRUCTURE 2 / COUNTY WILL / TOTAL SHEETS 1230 / SHEET NO. 195
	DRAWN - TMM	REVISED -			CONTRACT NO. 62R23
PLOT SCALE = 100.000 ' / in.	CHECKED - JIR	REVISED -			
PLOT DATE = 1/28/2026	DATE - 11/7/2025	REVISED -		SCALE: 1" = 50' / SHEET 7 OF 8 SHEETS / STA. / TO STA.	ILLINOIS / FED. AID PROJECT

THIS SHEET DELETED

1 DELETED ENTIRE SHEET 2/4/2026

USER NAME = tmmroz	DESIGNED - JAP	REVISED - 1 01/30/2026	STATE OF ILLINOIS DEPARTMENT OF TRANSPORTATION	SUGGESTED STAGES OF CONSTRUCTION AND TRAFFIC CONTROL STAGE 3				F.A.I. RTE.	SECTION	COUNTY	TOTAL SHEETS / SHEET NO.
	DRAWN - TMM	REVISED -						80	FAI 80 21 STRUCTURE 2	WILL	1230 / 196
PLOT SCALE = 100.000 ' / in.	CHECKED - JIR	REVISED -								CONTRACT NO. 62R23	
PLOT DATE = 1/28/2026	DATE - 11/7/2025	REVISED -		SCALE: 1" = 50'	SHEET 8 OF 8 SHEETS	STA.	TO STA.		ILLINOIS	FED. AID PROJECT	

MODEL: Default
FILE NAME: pw://transystems-pw.bentley.com:transyscorp-pw1-hosted/Documents/Projects_2018/CH401/401180022/03-WSP/CAD/62R23-RB-1/Sheets/CMD162R23-sht-EAST-MOTStage3-06.dgn

THIS SHEET DELETED

1 DELETED ENTIRE SHEET 2/4/2026

1

MODEL: Default
FILE NAME: pw://transystems-pw.bentley.com:transyscorp-pw1-hosted/Documents/Projects_2018/CH401/401180022/03-WSP/CAD/62R23-RB-1/Sheets/CMD162R23-sht-EAST-MOTStage3-substage-01.dgn

USER NAME = tmmroz	DESIGNED - JAP	REVISED - 1 01/30/2026	STATE OF ILLINOIS DEPARTMENT OF TRANSPORTATION	SUGGESTED STAGES OF CONSTRUCTION AND TRAFFIC CONTROL STAGE 3 – SUBSTAGE	F.A.I. RTE. 80 / SECTION FAI 80 21 STRUCTURE 2 / COUNTY WILL / TOTAL SHEETS 1230 / SHEET NO. 197
	DRAWN - TMM	REVISED -			CONTRACT NO. 62R23
PLOT SCALE = 100.000 ' / in.	CHECKED - JIR	REVISED -			
PLOT DATE = 1/28/2026	DATE - 11/7/2025	REVISED -		SCALE: 1" = 50' / SHEET 3 OF 8 SHEETS / STA. / TO STA.	ILLINOIS / FED. AID PROJECT

THIS SHEET DELETED

1 DELETED ENTIRE SHEET 2/4/2026

1

MODEL: Default
FILE NAME: pw://transystems-pw.bentley.com:transyscorp-pw1-hosted/Documents/Projects_2018/CH401/401180022/03-WSP/CAD/62R23-RB-1/Sheets/CMD162R23-sht-EAST-MOTStage3-substage-02.dgn

USER NAME = tmmroz	DESIGNED - JAP	REVISED - 1 01/30/2026	STATE OF ILLINOIS DEPARTMENT OF TRANSPORTATION	SUGGESTED STAGES OF CONSTRUCTION AND TRAFFIC CONTROL STAGE 3 – SUBSTAGE	F.A.I. RTE. 80 / SECTION FAI 80 21 STRUCTURE 2 / COUNTY WILL / TOTAL SHEETS 1230 / SHEET NO. 198
	DRAWN - TMM	REVISED -			CONTRACT NO. 62R23
PLOT SCALE = 100.000 ' / in.	CHECKED - JIR	REVISED -		SCALE: 1" = 50' / SHEET 4 OF 8 SHEETS / STA. TO STA.	ILLINOIS / FED. AID PROJECT
PLOT DATE = 1/28/2026	DATE - 11/7/2025	REVISED -			

THIS SHEET DELETED

1 DELETED ENTIRE SHEET 2/4/2026

1

MODEL: Default
FILE NAME: pw://transystems-pw.bentley.com:transyscorp-pw1-hosted/Documents/Projects_2018/CH401/401180022/03-WSP/CAD/62R23-RB-1/Sheets/CMD162R23-sht-EAST-MOTStage3-substage-03.dgn

USER NAME = tmmroz	DESIGNED - JAP	REVISED - 1 01/30/2026	STATE OF ILLINOIS DEPARTMENT OF TRANSPORTATION	SUGGESTED STAGES OF CONSTRUCTION AND TRAFFIC CONTROL STAGE 3 – SUBSTAGE	F.A.I. RTE. 80 / SECTION FAI 80 21 STRUCTURE 2 / COUNTY WILL / TOTAL SHEETS 1230 / SHEET NO. 199
	DRAWN - TMM	REVISED -			CONTRACT NO. 62R23
PLOT SCALE = 100.000 ' / in.	CHECKED - JIR	REVISED -			
PLOT DATE = 1/28/2026	DATE - 11/7/2025	REVISED -		SCALE: 1" = 50' / SHEET 5 OF 8 SHEETS / STA. / TO STA.	ILLINOIS / FED. AID PROJECT

THIS SHEET DELETED

1 DELETED ENTIRE SHEET 2/4/2026

1

MODEL: Default
FILE NAME: pw://transystems-pw.bentley.com:transyscorp-pw1-hosted/Documents/Projects_2018/CH401/401180022/03-WSP/CAD/62R23-RB-1/Sheets/CMD162R23-sht-EAST-MOTStage3-substage-04.dgn

USER NAME = tmmroz	DESIGNED - JAP	REVISED - 1 01/30/2026	STATE OF ILLINOIS DEPARTMENT OF TRANSPORTATION	SUGGESTED STAGES OF CONSTRUCTION AND TRAFFIC CONTROL STAGE 3 – SUBSTAGE	F.A.I. RTE. 80 / SECTION FAI 80 21 STRUCTURE 2 / COUNTY WILL / TOTAL SHEETS 1230 / SHEET NO. 200
	DRAWN - TMM	REVISED -			CONTRACT NO. 62R23
PLOT SCALE = 100.000 ' / in.	CHECKED - JIR	REVISED -			
PLOT DATE = 1/28/2026	DATE - 11/7/2025	REVISED -		SCALE: 1" = 50' / SHEET 6 OF 8 SHEETS / STA. TO STA.	ILLINOIS FED. AID PROJECT