THIS SHEET DELETED

1

MODEL: Default
FILE NAME: pw://transystems-pw.bentley.com:transyscorp-pw1-hosted/Documents/Projects_2018/CH401/401180022/03-WSP/CAD/62R23-RB-1/Sheets/CMD162R23-sht-EAST-MOTStage3-substage-05.dgn

USER NAME = tmmroz	DESIGNED - JAP	REVISED - 1 01/30/2026	STATE OF ILLINOIS DEPARTMENT OF TRANSPORTATION	SUGGESTED STAGES OF CONSTRUCTION AND TRAFFIC CONTROL STAGE 3 – SUBSTAGE	F.A.I. RTE. 80 / SECTION FAI 80 21 STRUCTURE 2 / COUNTY WILL / TOTAL SHEETS 1230 / SHEET NO. 201
	DRAWN - TMM	REVISED -			CONTRACT NO. 62R23
PLOT SCALE = 100.000 ' / in.	CHECKED - JIR	REVISED -			
PLOT DATE = 1/28/2026	DATE - 11/7/2025	REVISED -		SCALE: 1" = 50' / SHEET 7 OF 8 SHEETS / STA. TO STA.	ILLINOIS / FED. AID PROJECT

THIS SHEET DELETED

1

MODEL: Default
FILE NAME: pw://transystems-pw.bentley.com:transyscorp-pw1-hosted/Documents/Projects_2018/CH401/401180022/03-WSP/CAD/62R23-RB-1/Sheets/CMD162R23-sht-EAST-MOTStage3-substage-06.dgn

USER NAME = tmmroz	DESIGNED - JAP	REVISED - 1 01/30/2026	STATE OF ILLINOIS DEPARTMENT OF TRANSPORTATION	SUGGESTED STAGES OF CONSTRUCTION AND TRAFFIC CONTROL STAGE 3 – SUBSTAGE
	DRAWN - TMM	REVISED -		
PLOT SCALE = 100.000 ' / in.	CHECKED - JIR	REVISED -		
PLOT DATE = 1/28/2026	DATE - 11/7/2025	REVISED -		SCALE: 1" = 50' SHEET 8 OF 8 SHEETS STA. TO STA.

F.A.I. RTE.	SECTION	COUNTY	TOTAL SHEETS	SHEET NO.
80	FAI 80 21 STRUCTURE 2	WILL	1230	202
		CONTRACT NO. 62R23		
	ILLINOIS	FED. AID PROJECT		

NOTES:
1. UNLESS NOTED OTHERWISE, ALL STATIONS AND OFFSETS ARE TAKEN FROM PR CL I-80 OR PR CL I-80 RAMPS.
2. STAGE 4 TRAFFIC TO COORDINATE WITH ADJACENT CONTRACT 62R22 TRAFFIC STAGING TO THE WEST.
3. TEMPORARY SIGNS ON THE DES PLAINES RIVER BRIDGE SHALL BE MOUNTED TO EXISTING LIGHT POLES.
4. MAINTENANCE OF TRAFFIC ON THIS SHEET IS PROVIDED BY 62R22

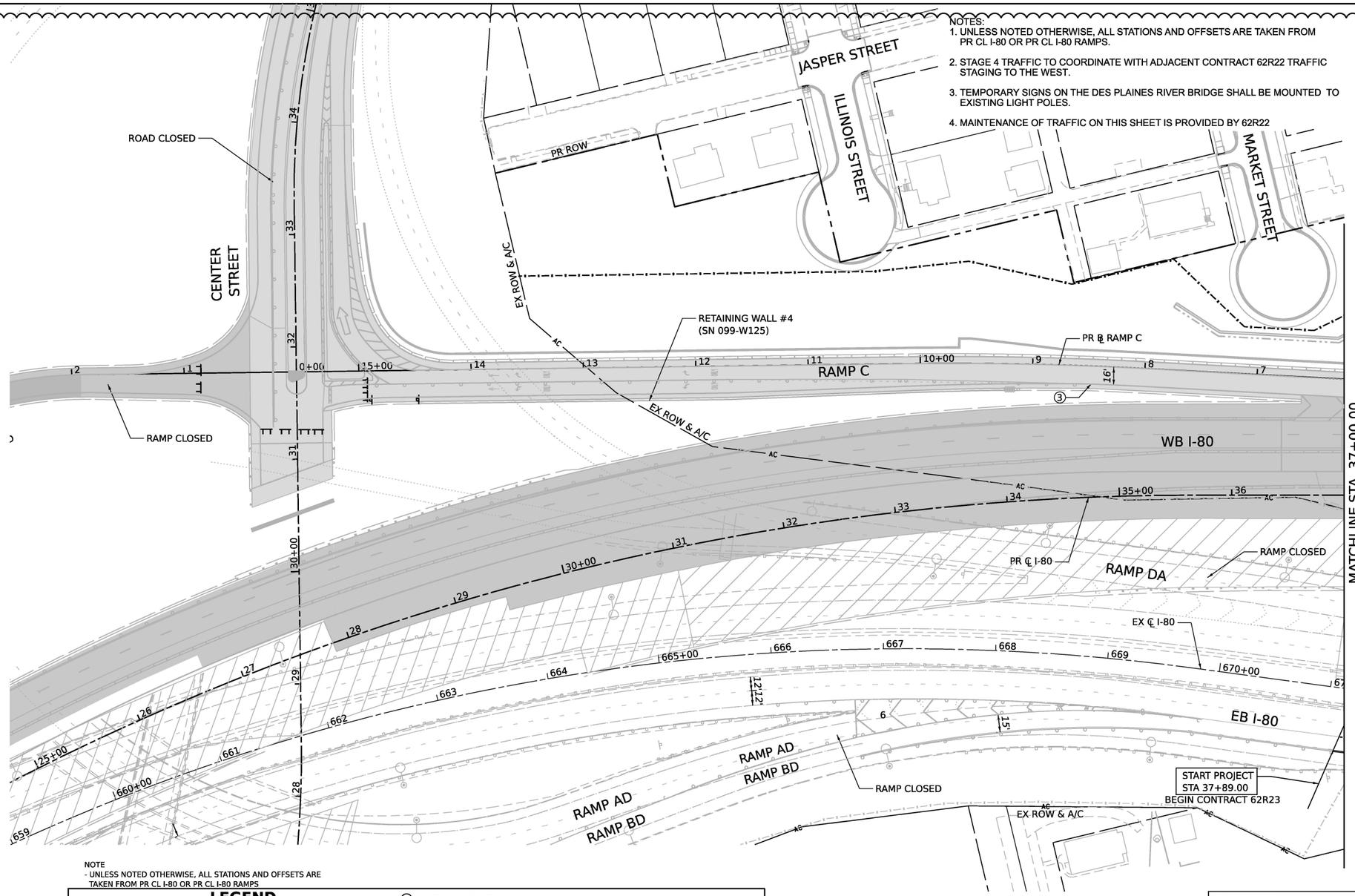

NOTE
- UNLESS NOTED OTHERWISE, ALL STATIONS AND OFFSETS ARE TAKEN FROM PR CL I-80 OR PR CL I-80 RAMPS

LEGEND

- WORK ZONE
- PAVEMENT CONSTRUCTED IN PREVIOUS STAGE
- TEMPORARY PAVEMENT (PREVIOUSLY CONSTRUCTED)
- TEMPORARY PAVEMENT (ACTIVELY CONSTRUCTING)
- TEMPORARY CONCRETE BARRIER OR RELOCATE TEMPORARY CONCRETE BARRIER
- TYPE II BARRICADE, DRUM, OR VERTICAL BARRICADE WITH STEADY BURN MONODIRECTIONAL LIGHT @ 100 FT C-C ALONG ROADWAY (TANGENT), 50 FT CENTERS ALONG TAPERS AND RAMPS
- TEMPORARY IMPACT ATTENUATOR
- DIRECTIONAL INDICATOR BARRICADE WITH STEADY BURN MONODIRECTIONAL LIGHT
- TYPE III BARRICADE
- DIRECTION OF TRAFFIC
- ARROW BOARD

* FROM PREVIOUS STAGE

- (E) EXISTING PAVEMENT MARKINGS
- (R) PAVEMENT MARKING REMOVAL
- (1) TEMP PVT MK - LINE 8" - EPOXY: 9' SKIP, 3' DASH WHITE
- (2) TEMP PVT MK - LINE 4" - EPOXY: SOLID WHITE
- (3) TEMP PVT MK - LINE 4" - EPOXY: SOLID YELLOW
- (4) TEMP PVT MK - LINE 5" - EPOXY: 30' SKIP, 10' DASH WHITE
- (5) TEMP PVT MK - LINE 8" - EPOXY: SOLID WHITE
- (6) TEMP PVT MK - LINE 12" - EPOXY: SOLID WHITE
- (7) TEMP PVT MK - LINE 4" - EPOXY: 30' SKIP, 10' DASH WHITE
- (8) TEMP PVT MK - LINE 4" - EPOXY: SOLID DOUBLE YELLOW
- (9) TEMP PVT MK - LINE 6" - EPOXY: SOLID WHITE
- (10) TEMP PVT MK - LINE 24" - EPOXY: SOLID WHITE
- (11) TEMP PVT MK - LINE 24" - EPOXY: WHITE LETTERS AND SYMBOLS
- (12) TEMP PVT MK - LINE 12" - EPOXY: SOLID YELLOW
- (13) TEMP PVT MK - LINE 4" - EPOXY: 6' SKIP, 2' DASH WHITE

TEMPORARY TRAFFIC CONTROL SIGN AND SUPPORT

N

0 50 100 150
SCALE IN FEET

KEY PLAN

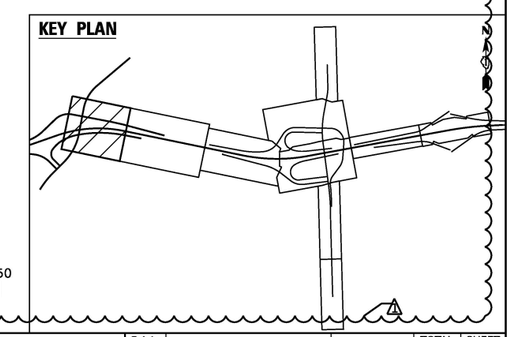

MODEL: Default
FILE NAME: pw://transystems-pw.bentley.com:transyscorp-pw1-hosted/Documents/Projects_2018/CH401/401180022/03-WSP/CAD/62R23-RB-1/Sheets/Civil/01 62R23-sht-staging4-1

WSP USA Inc.
30 N. LASALLE STREET
SUITE 4200
CHICAGO, IL 60602
TEL: (312) 782-8150

USER NAME = USGP718052	DESIGNED - HA	REVISED - 1 01/30/2026	
	DRAWN - HA	REVISED -	
PLOT SCALE = 100.000 ' / in.	CHECKED - SW	REVISED -	
PLOT DATE = 1/28/2026	DATE - 11/07/2025	REVISED -	

STATE OF ILLINOIS
DEPARTMENT OF TRANSPORTATION

SUGGESTED STAGES OF CONSTRUCTION AND TRAFFIC CONTROL
STAGE 4

SCALE: 1" = 50' | SHEET 1 OF 3 SHEETS | STA. TO STA.

F.A.I. RTE.	SECTION	COUNTY	TOTAL SHEETS	SHEET NO.
80	FAI 80 21 STRUCTURE 2	WILL	1230	203
		CONTRACT NO. 62R23		
		ILLINOIS	FED. AID PROJECT	

NOTE
- UNLESS NOTED OTHERWISE, ALL STATIONS AND OFFSETS ARE TAKEN FROM PR CL I-80 OR PR CL I-80 RAMPS

LEGEND

- WORK ZONE
- PAVEMENT CONSTRUCTED IN PREVIOUS STAGE
- TEMPORARY PAVEMENT (PREVIOUSLY CONSTRUCTED)
- TEMPORARY PAVEMENT (ACTIVELY CONSTRUCTING)
- TEMPORARY CONCRETE BARRIER OR RELOCATE TEMPORARY CONCRETE BARRIER
- TYPE II BARRICADE, DRUM, OR VERTICAL BARRICADE WITH STEADY BURN MONODIRECTIONAL LIGHT @ 100 FT C-C ALONG ROADWAY (TANGENT), 50 FT CENTERS ALONG TAPERS AND RAMPS
- TEMPORARY IMPACT ATTENUATOR
- DIRECTIONAL INDICATOR BARRICADE WITH STEADY BURN MONODIRECTIONAL LIGHT
- TYPE III BARRICADE
- DIRECTION OF TRAFFIC
- ARROW BOARD
- * FROM PREVIOUS STAGE
- TEMPORARY TRAFFIC CONTROL SIGN AND SUPPORT
- (E) EXISTING PAVEMENT MARKINGS
- (R) PAVEMENT MARKING REMOVAL
- (1) TEMP PVT MK - LINE 8" - EPOXY: 9' SKIP, 3' DASH WHITE
- (2) TEMP PVT MK - LINE 4" - EPOXY: SOLID WHITE
- (3) TEMP PVT MK - LINE 4" - EPOXY: SOLID YELLOW
- (4) TEMP PVT MK - LINE 5" - EPOXY: 30' SKIP, 10' DASH WHITE
- (5) TEMP PVT MK - LINE 8" - EPOXY: SOLID WHITE
- (6) TEMP PVT MK - LINE 12" - EPOXY: SOLID WHITE
- (7) TEMP PVT MK - LINE 4" - EPOXY: 30' SKIP, 10' DASH WHITE
- (8) TEMP PVT MK - LINE 4" - EPOXY: SOLID DOUBLE YELLOW
- (9) TEMP PVT MK - LINE 6" - EPOXY: SOLID WHITE
- (10) TEMP PVT MK - LINE 24" - EPOXY: SOLID WHITE
- (11) TEMP PVT MK - LINE 24" - EPOXY: WHITE LETTERS AND SYMBOLS
- (12) TEMP PVT MK - LINE 12" - EPOXY: SOLID YELLOW
- (13) TEMP PVT MK - LINE 4" - EPOXY: 6' SKIP, 2' DASH WHITE

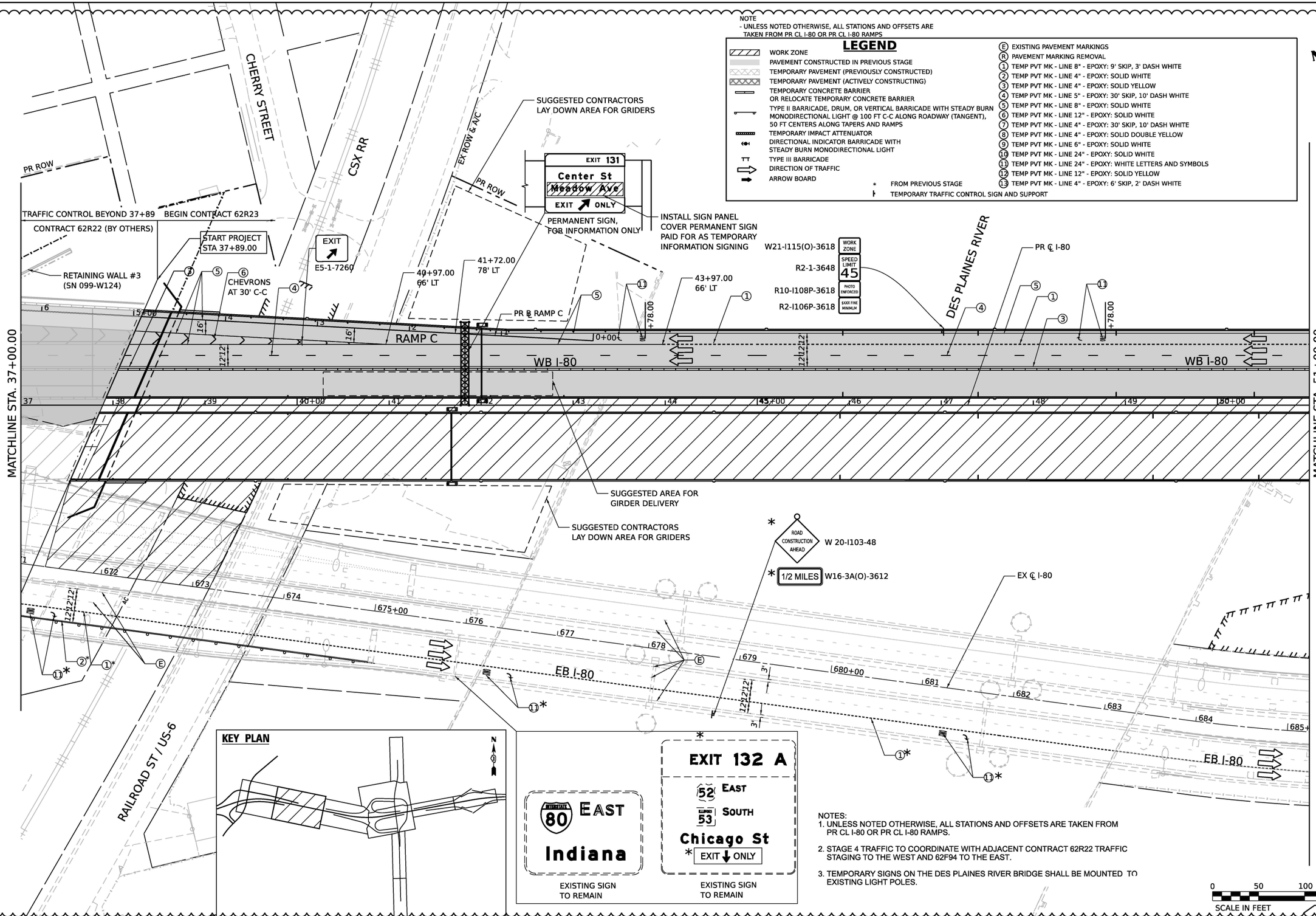

NOTES:
1. UNLESS NOTED OTHERWISE, ALL STATIONS AND OFFSETS ARE TAKEN FROM PR CL I-80 OR PR CL I-80 RAMPS.
2. STAGE 4 TRAFFIC TO COORDINATE WITH ADJACENT CONTRACT 62R22 TRAFFIC STAGING TO THE WEST AND 62F94 TO THE EAST.
3. TEMPORARY SIGNS ON THE DES PLAINES RIVER BRIDGE SHALL BE MOUNTED TO EXISTING LIGHT POLES.

0 50 100 150
SCALE IN FEET

MODEL: Default
FILE NAME: pw://transystems-pw.bentley.com:transyscorp-pw1-hosted/Documents/Projects_2018/CH401/401180022/03-WSP/CAD/62R23-RB-1/Sheets/Civil/D162R23-sht-staging4-2

WSP USA Inc.
30 N. LASALLE STREET
SUITE 4200
CHICAGO, IL 60602
TEL: (312) 782-8150

USER NAME = USGP718052	DESIGNED - HA	REVISED -	01/30/2026
	DRAWN - HA	REVISED -	
PLOT SCALE = 100.000 ' / in.	CHECKED - SW	REVISED -	
PLOT DATE = 1/28/2026	DATE - 11/07/2025	REVISED -	

STATE OF ILLINOIS
DEPARTMENT OF TRANSPORTATION

SUGGESTED STAGES OF CONSTRUCTION AND TRAFFIC CONTROL
STAGE 4

SCALE: 1" = 50' | SHEET 2 OF 3 SHEETS | STA. TO STA.

F.A.I. RTE.	SECTION	COUNTY	TOTAL SHEETS	SHEET NO.
80	FAI 80 21 STRUCTURE 2	WILL	1230	204
		CONTRACT NO. 62R23		
		ILLINOIS	FED. AID PROJECT	

LEGEND

- WORK ZONE
- PAVEMENT CONSTRUCTED IN PREVIOUS STAGE
- TEMPORARY PAVEMENT (PREVIOUSLY CONSTRUCTED)
- TEMPORARY PAVEMENT (ACTIVELY CONSTRUCTING)
- TEMPORARY CONCRETE BARRIER OR RELOCATE TEMPORARY CONCRETE BARRIER
- TYPE II BARRICADE, DRUM, OR VERTICAL BARRICADE WITH STEADY BURN MONODIRECTIONAL LIGHT @ 100 FT C-C ALONG ROADWAY (TANGENT), 50 FT CENTERS ALONG TAPERS AND RAMPS
- TEMPORARY IMPACT ATTENUATOR
- DIRECTIONAL INDICATOR BARRICADE WITH STEADY BURN MONODIRECTIONAL LIGHT
- TYPE III BARRICADE
- DIRECTION OF TRAFFIC
- ARROW BOARD

* FROM PREVIOUS STAGE

TEMPORARY TRAFFIC CONTROL SIGN AND SUPPORT

(E) EXISTING PAVEMENT MARKINGS
(R) PAVEMENT MARKING REMOVAL
(1) TEMP PVT MK - LINE 8" - EPOXY: 9' SKIP, 3' DASH WHITE
(2) TEMP PVT MK - LINE 4" - EPOXY: SOLID WHITE
(3) TEMP PVT MK - LINE 4" - EPOXY: SOLID YELLOW
(4) TEMP PVT MK - LINE 5" - EPOXY: 30' SKIP, 10' DASH WHITE
(5) TEMP PVT MK - LINE 8" - EPOXY: SOLID WHITE
(6) TEMP PVT MK - LINE 12" - EPOXY: SOLID WHITE
(7) TEMP PVT MK - LINE 4" - EPOXY: 30' SKIP, 10' DASH WHITE
(8) TEMP PVT MK - LINE 4" - EPOXY: SOLID DOUBLE YELLOW
(9) TEMP PVT MK - LINE 6" - EPOXY: SOLID WHITE
(10) TEMP PVT MK - LINE 24" - EPOXY: SOLID WHITE
(11) TEMP PVT MK - LINE 24" - EPOXY: WHITE LETTERS AND SYMBOLS
(12) TEMP PVT MK - LINE 12" - EPOXY: SOLID YELLOW
(13) TEMP PVT MK - LINE 4" - EPOXY: 6' SKIP, 2' DASH WHITE

NOTES:
1. UNLESS NOTED OTHERWISE, ALL STATIONS AND OFFSETS ARE TAKEN FROM PR CL I-80 OR PR CL I-80 RAMPS.
2. STAGE 4 TRAFFIC TO COORDINATE WITH ADJACENT CONTRACT 62R22 TRAFFIC STAGING TO THE WEST AND 62F94 TO THE EAST.
3. TEMPORARY SIGNS ON THE DES PLAINES RIVER BRIDGE SHALL BE MOUNTED TO EXISTING LIGHT POLES.

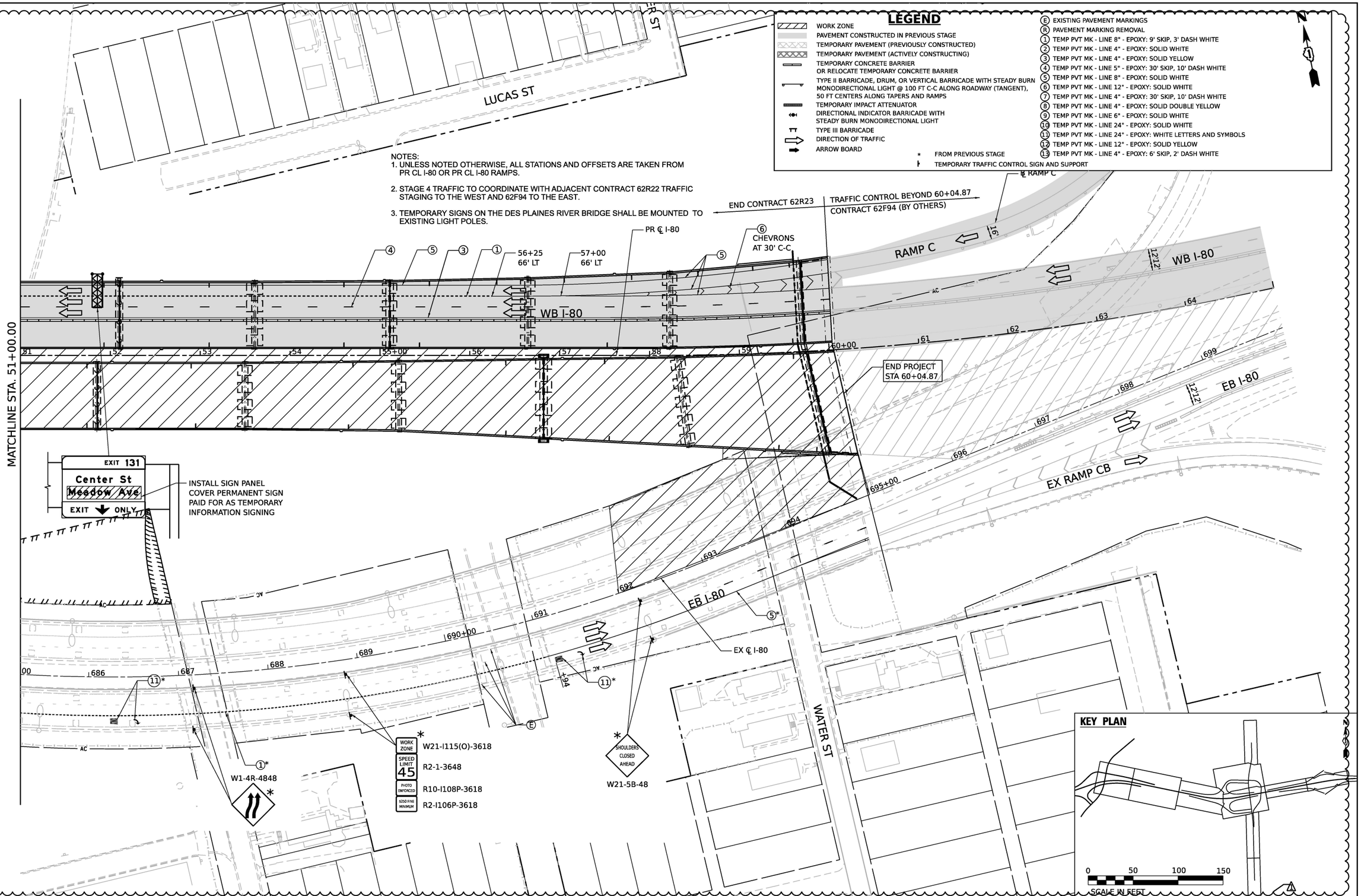

MODEL: Default
FILE NAME: pw://transystems-pw.bentley.com:transyscorp-pw1-hosted/Documents/Projects_2018/CH401/401180022/03-WSP/CAD/62R23-RB-1/Sheets/Civil/D162R23-sht-staging4-3

WSP USA Inc.
30 N. LASALLE STREET
SUITE 4200
CHICAGO, IL 60602
TEL: (312) 782-8150

USER NAME = USGP718052	DESIGNED - HA	REVISED -	01/30/2026
	DRAWN - JFA	REVISED -	
PLOT SCALE = 100.000 ' / in.	CHECKED - SW	REVISED -	
PLOT DATE = 1/28/2026	DATE - 11/07/2025	REVISED -	

STATE OF ILLINOIS
DEPARTMENT OF TRANSPORTATION

SUGGESTED STAGES OF CONSTRUCTION AND TRAFFIC CONTROL
STAGE 4

SCALE: 1" = 50' | SHEET 3 OF 3 SHEETS | STA. TO STA.

F.A.I. RTE.	SECTION	COUNTY	TOTAL SHEETS	SHEET NO.
80	FAI 80 21 STRUCTURE 2	WILL	1230	205
		CONTRACT NO. 62R23		
	ILLINOIS	FED. AID PROJECT		

THIS SHEET DELETED

MODEL: Default
FILE NAME: pw://transystems-pw.bentley.com:transysccorp-pw1-hosted/Documents/Projects_2018/CH401/401180022/03-WSP/CAD/62R23-Rb-1/Sheets/CM0162R23-sht-EAST-MOTStage4A-02.dgn

USER NAME = tmmroz	DESIGNED - JAP	REVISED - 1 01/30/2026	STATE OF ILLINOIS DEPARTMENT OF TRANSPORTATION	SUGGESTED STAGES OF CONSTRUCTION AND TRAFFIC CONTROL STAGE 4A	
	DRAWN - TMM	REVISED -			
PLOT SCALE = 100.000 ' / in.	CHECKED - JIR	REVISED -			
PLOT DATE = 1/28/2026	DATE - 11/7/2025	REVISED -		SCALE: 1" = 50' SHEET 4 OF 9 SHEETS STA. TO STA.	

F.A.I. RTE.	SECTION	COUNTY	TOTAL SHEETS	SHEET NO.
80	FAI 80 21 STRUCTURE 2	WILL	1230	206
		CONTRACT NO. 62R23		
		ILLINOIS FED. AID PROJECT		

THIS SHEET DELETED

MODEL: Default
FILE NAME: pw://transystems-pw.bentley.com:transysccorp-pw1-hosted/Documents/Projects_2018/CH401/401180022/03-WSP/CAD/62R23-Rb-1/Sheets/CKM0162R23-sht-EAST-MOTStage4A-03.dgn

USER NAME = tmmroz	DESIGNED - JAP	REVISED - 1 01/30/2026	STATE OF ILLINOIS DEPARTMENT OF TRANSPORTATION	SUGGESTED STAGES OF CONSTRUCTION AND TRAFFIC CONTROL STAGE 4A	F.A.I. RTE. 80 / SECTION FAI 80 21 STRUCTURE 2 / COUNTY WILL / TOTAL SHEETS 1230 / SHEET NO. 207
	DRAWN - TMM	REVISED -			CONTRACT NO. 62R23
PLOT SCALE = 100.000 ' / in.	CHECKED - JIR	REVISED -		SCALE: 1" = 50' / SHEET 5 OF 9 SHEETS / STA. TO STA.	ILLINOIS / FED. AID PROJECT
PLOT DATE = 1/28/2026	DATE - 11/7/2025	REVISED -			

THIS SHEET DELETED

MODEL: Default
FILE NAME: pw://transystems-pw.bentley.com:transyscorp-pw1-hosted/Documents/Projects_2018/CH401/401180022/03-WSP/CAD/62R23-Rb-1/Sheets/CM0162R23-sht-EAST-MOTStage4A-04.dgn

USER NAME = tmmroz	DESIGNED - JAP	REVISED - 1 01/30/2026	STATE OF ILLINOIS DEPARTMENT OF TRANSPORTATION	SUGGESTED STAGES OF CONSTRUCTION AND TRAFFIC CONTROL STAGE 4A	F.A.I. RTE. 80 / SECTION FAI 80 21 STRUCTURE 2 / COUNTY WILL / TOTAL SHEETS 1230 / SHEET NO. 208
	DRAWN - TMM	REVISED -			CONTRACT NO. 62R23
PLOT SCALE = 100.000 ' / in.	CHECKED - JIR	REVISED -			ILLINOIS FED. AID PROJECT
PLOT DATE = 1/28/2026	DATE - 11/7/2025	REVISED -		SCALE: 1" = 50' / SHEET 6 OF 9 SHEETS / STA. TO STA.	

THIS SHEET DELETED

MODEL: Default
FILE NAME: pw://transystems-pw.bentley.com:transyscorp-pw1-hosted/Documents/Projects_2018/CH401/401180022/03-WSP/CAD/62R23-Rb-1/Sheets/CM0162R23-sht-EAST-MOTStage4A-05.dgn

USER NAME = tmmroz	DESIGNED - JAP	REVISED - 1 01/30/2026	STATE OF ILLINOIS DEPARTMENT OF TRANSPORTATION	SUGGESTED STAGES OF CONSTRUCTION AND TRAFFIC CONTROL STAGE 4A	F.A.I. RTE. 80 / SECTION FAI 80 21 STRUCTURE 2 / COUNTY WILL / TOTAL SHEETS 1230 / SHEET NO. 209
	DRAWN - TMM	REVISED -			CONTRACT NO. 62R23
PLOT SCALE = 100.000 ' / in.	CHECKED - JIR	REVISED -		SCALE: 1" = 50' / SHEET 7 OF 9 SHEETS / STA. TO STA.	ILLINOIS / FED. AID PROJECT
PLOT DATE = 1/28/2026	DATE - 11/7/2025	REVISED -			

THIS SHEET DELETED

MODEL: Default
FILE NAME: pw://transystems-pw.bentley.com:transyscorp-pw1-hosted/Documents/Projects_2018/CH401/401180022/03-WSP/CAD/62R23-Rb-1/Sheets/CM0162R23-sht-EAST-MOTStage4A-06.dgn

USER NAME = tmmroz	DESIGNED - JAP	REVISED - 1 01/30/2026	STATE OF ILLINOIS DEPARTMENT OF TRANSPORTATION	SUGGESTED STAGES OF CONSTRUCTION AND TRAFFIC CONTROL STAGE 4A	F.A.I. RTE. 80 / SECTION FAI 80 21 STRUCTURE 2 / COUNTY WILL / TOTAL SHEETS 1230 / SHEET NO. 210
	DRAWN - TMM	REVISED -			CONTRACT NO. 62R23
PLOT SCALE = 100.000 ' / in.	CHECKED - JIR	REVISED -		SCALE: 1" = 50' / SHEET 8 OF 9 SHEETS / STA. TO STA.	ILLINOIS / FED. AID PROJECT
PLOT DATE = 1/28/2026	DATE - 11/7/2025	REVISED -			

THIS SHEET DELETED

MODEL: Default
FILE NAME: pw://transystems-pw.bentley.com:transyscorp-pw1-hosted/Documents/Projects_2018/CH401/401180022/03-WSP/CAD/62R23-RB-1/Sheets/CKM0162R23-sht-EAST-MOTStage4A-07.dgn

USER NAME = tmmroz	DESIGNED - JAP	REVISED - ⚠ 01/30/2026	STATE OF ILLINOIS DEPARTMENT OF TRANSPORTATION	SUGGESTED STAGES OF CONSTRUCTION AND TRAFFIC CONTROL INTERSECTION DETAIL STAGE 3 – SUBSTAGE, 4A, 4B, 5B	
	DRAWN - TMM	REVISED -			
PLOT SCALE = 40.000 ' / in.	CHECKED - JIR	REVISED -			
PLOT DATE = 1/28/2026	DATE - 11/7/2025	REVISED -		SCALE: 1" = 20' SHEET 7 OF 8 SHEETS STA. TO STA.	

F.A.I. RTE.	SECTION	COUNTY	TOTAL SHEETS	SHEET NO.
80	FAI 80 21 STRUCTURE 2	WILL	1230	211
		CONTRACT NO. 62R23		
		ILLINOIS	FED. AID PROJECT	

THIS SHEET DELETED

MODEL: Default
FILE NAME: pw://transystems-pw.bentley.com:transyscorp-pw1-hosted/Documents/Projects_2018/CH401/401180022/03-WSP/CAD/62R23-Rb-1/Sheets/CM0162R23-sht-EAST-MOTStage4A-08.dgn

USER NAME = tmmroz	DESIGNED - JAP	REVISED - 1 01/30/2026	STATE OF ILLINOIS DEPARTMENT OF TRANSPORTATION	SUGGESTED STAGES OF CONSTRUCTION AND TRAFFIC CONTROL INTERSECTION DETAIL STAGES 4A, 4B, 5A, 5B			F.A.I. RTE.	SECTION	COUNTY	TOTAL SHEETS	SHEET NO.
	DRAWN - TMM	REVISED -					80	FAI 80 21 STRUCTURE 2	WILL	1230	212
PLOT SCALE = 40.000 ' / in.	CHECKED - JIR	REVISED -							CONTRACT NO. 62R23		
PLOT DATE = 1/28/2026	DATE - 11/7/2025	REVISED -		SCALE: 1" = 20'	SHEET 8 OF 8 SHEETS	STA. TO STA.			ILLINOIS	FED. AID PROJECT	

THIS SHEET DELETED

MODEL: Default
FILE NAME: pw://transystems-pw.bentley.com:transyscorp-pw1-hosted/Documents/Projects_2018/CH401/401180022/03-WSP/CAD/62R23-4B-1/Sheets/CMD162R23-sht-EAST-MOTStage4B-01.dgn

USER NAME = tmmroz	DESIGNED - JAP	REVISED - 1 01/30/2026	STATE OF ILLINOIS DEPARTMENT OF TRANSPORTATION	SUGGESTED STAGES OF CONSTRUCTION AND TRAFFIC CONTROL STAGE 4B				F.A.I. RTE.	SECTION	COUNTY	TOTAL SHEETS	SHEET NO.
	DRAWN - TMM	REVISED -						80	FAI 80 21 STRUCTURE 2	WILL	1230	213
PLOT SCALE = 100.000 ' / in.	CHECKED - JIR	REVISED -								CONTRACT NO. 62R23		
PLOT DATE = 1/28/2026	DATE - 11/7/2025	REVISED -		SCALE: 1" = 50'	SHEET 3 OF 9 SHEETS	STA.	TO STA.		ILLINOIS	FED. AID PROJECT		

THIS SHEET DELETED

MODEL: Default
FILE NAME: pw://transystems-pw.bentley.com:transyscorp-pw1-hosted/Documents/Projects_2018/CH401/401180022/03-WSP/CAD/62R23-4B-1/Sheets/CMD162R23-sht-EAST-MOTStage4B-02.dgn

USER NAME = tmmroz	DESIGNED - JAP	REVISED - 1 01/30/2026	STATE OF ILLINOIS DEPARTMENT OF TRANSPORTATION	SUGGESTED STAGES OF CONSTRUCTION AND TRAFFIC CONTROL STAGE 4B				F.A.I. RTE.	SECTION	COUNTY	TOTAL SHEETS	SHEET NO.
	DRAWN - TMM	REVISED -						80	FAI 80 21 STRUCTURE 2	WILL	1230	214
PLOT SCALE = 100.000 ' / in.	CHECKED - JIR	REVISED -								CONTRACT NO. 62R23		
PLOT DATE = 1/28/2026	DATE - 11/7/2025	REVISED -		SCALE: 1" = 50'	SHEET 4 OF 9 SHEETS	STA.	TO STA.		ILLINOIS	FED. AID PROJECT		

THIS SHEET DELETED

MODEL: Default
FILE NAME: pw://transystems-pw.bentley.com:transyscorp-pw1-hosted/Documents/Projects_2018/CH401/401180022/03-WSP/CAD/62R23-4B-1/Sheets/CMD162R23-sht-EAST-MOTStage4B-03.dgn

USER NAME = tmmroz	DESIGNED - JAP	REVISED - 1 01/30/2026	STATE OF ILLINOIS DEPARTMENT OF TRANSPORTATION	SUGGESTED STAGES OF CONSTRUCTION AND TRAFFIC CONTROL STAGE 4B				F.A.I. RTE.	SECTION	COUNTY	TOTAL SHEETS	SHEET NO.
	DRAWN - TMM	REVISED -						80	FAI 80 21 STRUCTURE 2	WILL	1230	215
PLOT SCALE = 100.000 ' / in.	CHECKED - JIR	REVISED -								CONTRACT NO. 62R23		
PLOT DATE = 1/28/2026	DATE - 11/7/2025	REVISED -		SCALE: 1" = 50'	SHEET 5 OF 9 SHEETS	STA.	TO STA.		ILLINOIS	FED. AID PROJECT		

THIS SHEET DELETED

MODEL: Default
FILE NAME: pw://transystems-pw.bentley.com:transyscorp-pw1-hosted/Documents/Projects_2018/CH401/401180022/03-WSP/CAD/62R23-4B-1/Sheets/CMD162R23-sht-EAST-MOTStage4B-04.dgn

USER NAME = tmmroz	DESIGNED - JAP	REVISED - 1 01/30/2026	STATE OF ILLINOIS DEPARTMENT OF TRANSPORTATION	SUGGESTED STAGES OF CONSTRUCTION AND TRAFFIC CONTROL STAGE 4B				F.A.I. RTE.	SECTION	COUNTY	TOTAL SHEETS	SHEET NO.
	DRAWN - TMM	REVISED -						80	FAI 80 21 STRUCTURE 2	WILL	1230	216
PLOT SCALE = 100.000 ' / in.	CHECKED - JIR	REVISED -								CONTRACT NO. 62R23		
PLOT DATE = 1/28/2026	DATE - 11/7/2025	REVISED -		SCALE: 1" = 50'	SHEET 6 OF 9 SHEETS	STA.	TO STA.		ILLINOIS	FED. AID PROJECT		

THIS SHEET DELETED

MODEL: Default
FILE NAME: pw://transystems-pw.bentley.com:transyscorp-pw1-hosted/Documents/Projects_2018/CH401/401180022/03-WSP/CAD/62R23-4B-1/Sheets/CMD162R23-sht-EAST-MOTStage4B-05.dgn

USER NAME = tmmroz	DESIGNED - JAP	REVISED - 1 01/30/2026	STATE OF ILLINOIS DEPARTMENT OF TRANSPORTATION	SUGGESTED STAGES OF CONSTRUCTION AND TRAFFIC CONTROL STAGE 4B			F.A.I. RTE.	SECTION	COUNTY	TOTAL SHEETS	SHEET NO.
	DRAWN - TMM	REVISED -					80	FAI 80 21 STRUCTURE 2	WILL	1230	217
PLOT SCALE = 100.000 ' / in.	CHECKED - JIR	REVISED -							CONTRACT NO. 62R23		
PLOT DATE = 1/28/2026	DATE - 11/7/2025	REVISED -		SCALE: 1" = 50'	SHEET 7 OF 9 SHEETS	STA. TO STA.			ILLINOIS	FED. AID PROJECT	

THIS SHEET DELETED

MODEL: Default
FILE NAME: pw://transystems-pw.bentley.com:transyscorp-pw1-hosted/Documents/Projects_2018/CH401/401180022/03-WSP/CAD/62R23-4B-1/Sheets/CMD162R23-sht-EAST-MOTStage4B-06.dgn

USER NAME = tmmroz	DESIGNED - JAP	REVISED - 1 01/30/2026	STATE OF ILLINOIS DEPARTMENT OF TRANSPORTATION	SUGGESTED STAGES OF CONSTRUCTION AND TRAFFIC CONTROL STAGE 4B				F.A.I. RTE.	SECTION	COUNTY	TOTAL SHEETS	SHEET NO.
	DRAWN - TMM	REVISED -						80	FAI 80 21 STRUCTURE 2	WILL	1230	218
PLOT SCALE = 100.000 ' / in.	CHECKED - JIR	REVISED -								CONTRACT NO. 62R23		
PLOT DATE = 1/28/2026	DATE - 11/7/2025	REVISED -		SCALE: 1" = 50'	SHEET 8 OF 9 SHEETS	STA.	TO STA.		ILLINOIS	FED. AID PROJECT		

NOTES:
1. UNLESS NOTED OTHERWISE, ALL STATIONS AND OFFSETS ARE TAKEN FROM PR CL I-80 OR PR CL I-80 RAMPS.
2. STAGE 5 TRAFFIC TO COORDINATE WITH ADJACENT CONTRACT 62R22 TRAFFIC STAGING TO THE WEST.
3. TEMPORARY SIGNS ON THE DES PLAINES RIVER BRIDGE SHALL BE MOUNTED TO EXISTING LIGHT POLES.
4. MAINTENANCE OF TRAFFIC ON THIS SHEET IS PROVIDED BY 62R22

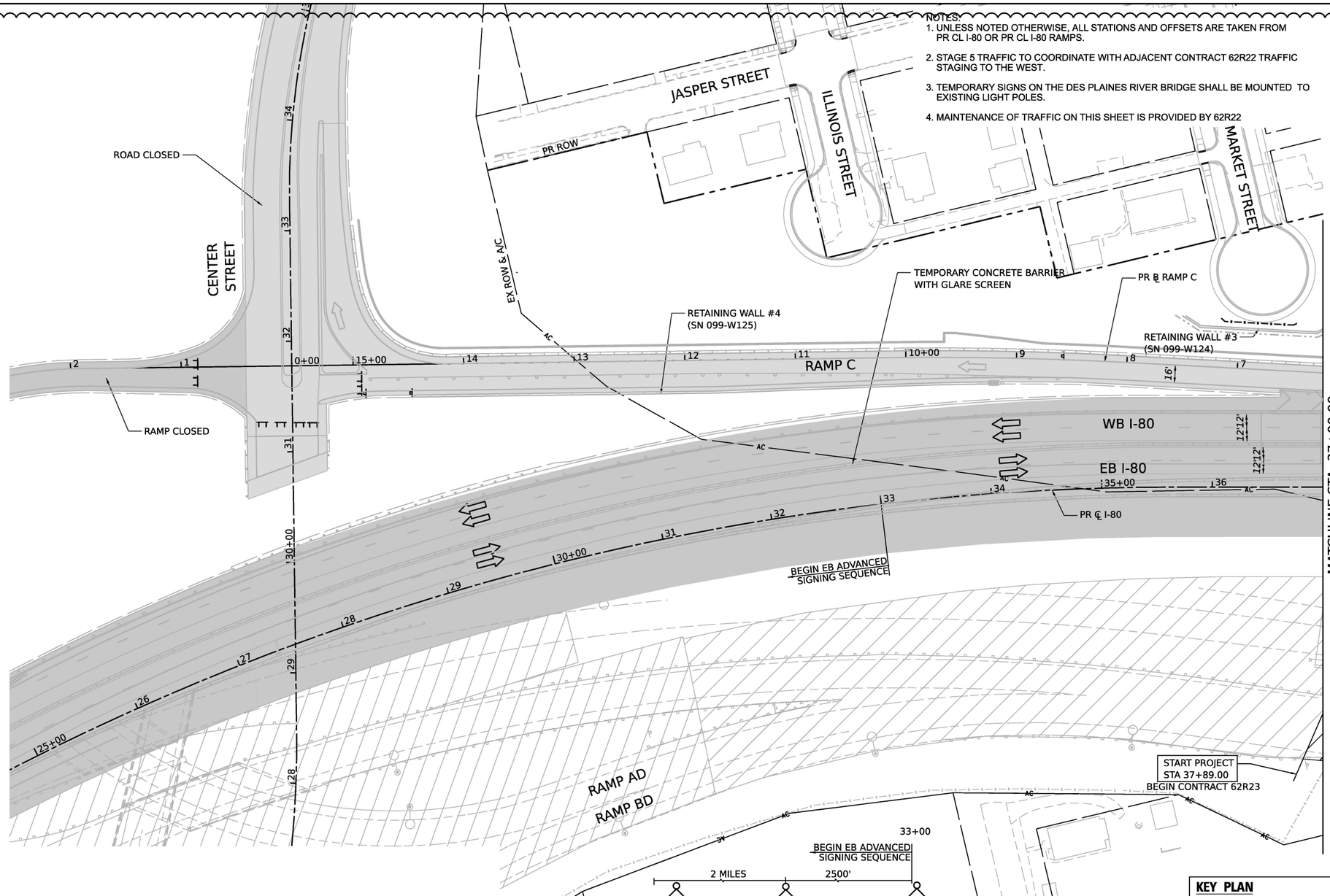

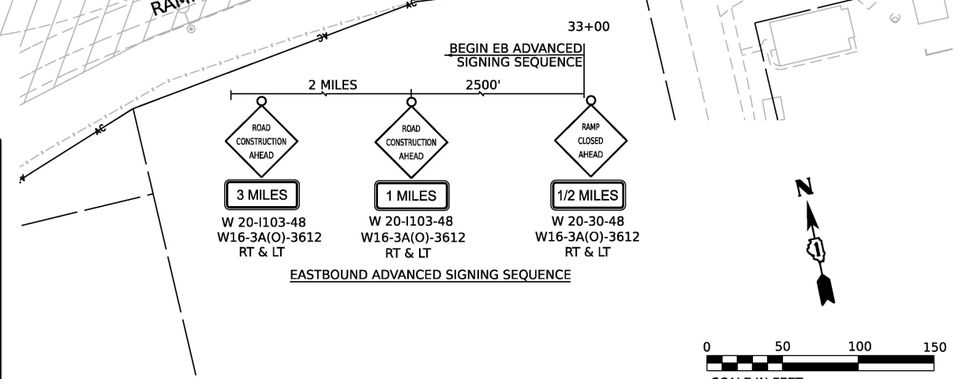

NOTE
- UNLESS NOTED OTHERWISE, ALL STATIONS AND OFFSETS ARE TAKEN FROM PR CL I-80 OR PR CL I-80 RAMPS

LEGEND

- WORK ZONE
- PAVEMENT CONSTRUCTED IN PREVIOUS STAGE
- TEMPORARY PAVEMENT (PREVIOUSLY CONSTRUCTED)
- TEMPORARY PAVEMENT (ACTIVELY CONSTRUCTING)
- TEMPORARY CONCRETE BARRIER OR RELOCATE TEMPORARY CONCRETE BARRIER
- TYPE II BARRICADE, DRUM, OR VERTICAL BARRICADE WITH STEADY BURN MONODIRECTIONAL LIGHT @ 100 FT C-C ALONG ROADWAY (TANGENT), 50 FT CENTERS ALONG TAPERS AND RAMPS
- TEMPORARY IMPACT ATTENUATOR
- DIRECTIONAL INDICATOR BARRICADE WITH STEADY BURN MONODIRECTIONAL LIGHT
- TYPE III BARRICADE
- DIRECTION OF TRAFFIC
- ARROW BOARD

* FROM PREVIOUS STAGE
* TEMPORARY TRAFFIC CONTROL SIGN AND SUPPORT

(E) EXISTING PAVEMENT MARKINGS
(R) PAVEMENT MARKING REMOVAL
(1) TEMP PVT MK - LINE 8" - EPOXY: 9' SKIP, 3' DASH WHITE
(2) TEMP PVT MK - LINE 4" - EPOXY: SOLID WHITE
(3) TEMP PVT MK - LINE 4" - EPOXY: SOLID YELLOW
(4) TEMP PVT MK - LINE 5" - EPOXY: 30' SKIP, 10' DASH WHITE
(5) TEMP PVT MK - LINE 8" - EPOXY: SOLID WHITE
(6) TEMP PVT MK - LINE 12" - EPOXY: SOLID WHITE
(7) TEMP PVT MK - LINE 4" - EPOXY: 30' SKIP, 10' DASH WHITE
(8) TEMP PVT MK - LINE 4" - EPOXY: SOLID DOUBLE YELLOW
(9) TEMP PVT MK - LINE 6" - EPOXY: SOLID WHITE
(10) TEMP PVT MK - LINE 24" - EPOXY: SOLID WHITE
(11) TEMP PVT MK - LINE 24" - EPOXY: WHITE LETTERS AND SYMBOLS
(12) TEMP PVT MK - LINE 12" - EPOXY: SOLID YELLOW
(13) TEMP PVT MK - LINE 4" - EPOXY: 6' SKIP, 2' DASH WHITE

KEY PLAN

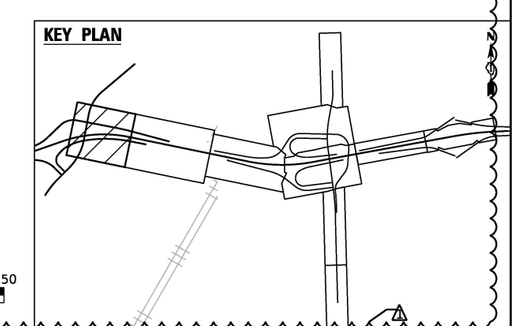

WSP USA Inc.
30 N. LASALLE STREET
SUITE 4200
CHICAGO, IL 60602
TEL: (312) 782-8150

USER NAME = USGP718052	DESIGNED - HA	REVISED - 1 01/30/2026	
	DRAWN - HA	REVISED -	
PLOT SCALE = 100.000 ' / in.	CHECKED - SW	REVISED -	
PLOT DATE = 1/28/2026	DATE - 11/07/2025	REVISED -	

STATE OF ILLINOIS
DEPARTMENT OF TRANSPORTATION

SUGGESTED STAGES OF CONSTRUCTION AND TRAFFIC CONTROL
STAGE 5

SCALE: 1" = 50' | SHEET 1 OF 3 SHEETS | STA. TO STA.

F.A.I. RTE.	SECTION	COUNTY	TOTAL SHEETS	SHEET NO.
80	FAI 80 21 STRUCTURE 2	WILL	1230	219
		CONTRACT NO. 62R23		
		ILLINOIS	FED. AID PROJECT	

MODEL: Default
FILE NAME: pw://transystems-pw.bentley.com:transyscorp-pw1-hosted/Documents/Projects_2018/CH401/401180022/03-WSP/CAD/62R23-RB-1/Sheets/Civil/D162R23-sht-staging5-1

NOTE
- UNLESS NOTED OTHERWISE, ALL STATIONS AND OFFSETS ARE TAKEN FROM PR CL I-80 OR PR CL I-80 RAMPS

LEGEND

- WORK ZONE
- PAVEMENT CONSTRUCTED IN PREVIOUS STAGE
- TEMPORARY PAVEMENT (PREVIOUSLY CONSTRUCTED)
- TEMPORARY PAVEMENT (ACTIVELY CONSTRUCTING)
- TEMPORARY CONCRETE BARRIER OR RELOCATE TEMPORARY CONCRETE BARRIER
- TYPE II BARRICADE, DRUM, OR VERTICAL BARRICADE WITH STEADY BURN MONODIRECTIONAL LIGHT @ 100 FT C-C ALONG ROADWAY (TANGENT), 50 FT CENTERS ALONG TAPERS AND RAMPS
- TEMPORARY IMPACT ATTENUATOR
- DIRECTIONAL INDICATOR BARRICADE WITH STEADY BURN MONODIRECTIONAL LIGHT
- TYPE III BARRICADE
- DIRECTION OF TRAFFIC
- ARROW BOARD

* FROM PREVIOUS STAGE
TEMPORARY TRAFFIC CONTROL SIGN AND SUPPORT

- (E) EXISTING PAVEMENT MARKINGS
- (R) PAVEMENT MARKING REMOVAL
- (1) TEMP PVT MK - LINE 8" - EPOXY: 9' SKIP, 3' DASH WHITE
- (2) TEMP PVT MK - LINE 4" - EPOXY: SOLID WHITE
- (3) TEMP PVT MK - LINE 4" - EPOXY: SOLID YELLOW
- (4) TEMP PVT MK - LINE 5" - EPOXY: 30' SKIP, 10' DASH WHITE
- (5) TEMP PVT MK - LINE 8" - EPOXY: SOLID WHITE
- (6) TEMP PVT MK - LINE 12" - EPOXY: SOLID WHITE
- (7) TEMP PVT MK - LINE 4" - EPOXY: 30' SKIP, 10' DASH WHITE
- (8) TEMP PVT MK - LINE 4" - EPOXY: SOLID DOUBLE YELLOW
- (9) TEMP PVT MK - LINE 6" - EPOXY: SOLID WHITE
- (10) TEMP PVT MK - LINE 24" - EPOXY: SOLID WHITE
- (11) TEMP PVT MK - LINE 24" - EPOXY: WHITE LETTERS AND SYMBOLS
- (12) TEMP PVT MK - LINE 12" - EPOXY: SOLID YELLOW
- (13) TEMP PVT MK - LINE 4" - EPOXY: 6' SKIP, 2' DASH WHITE

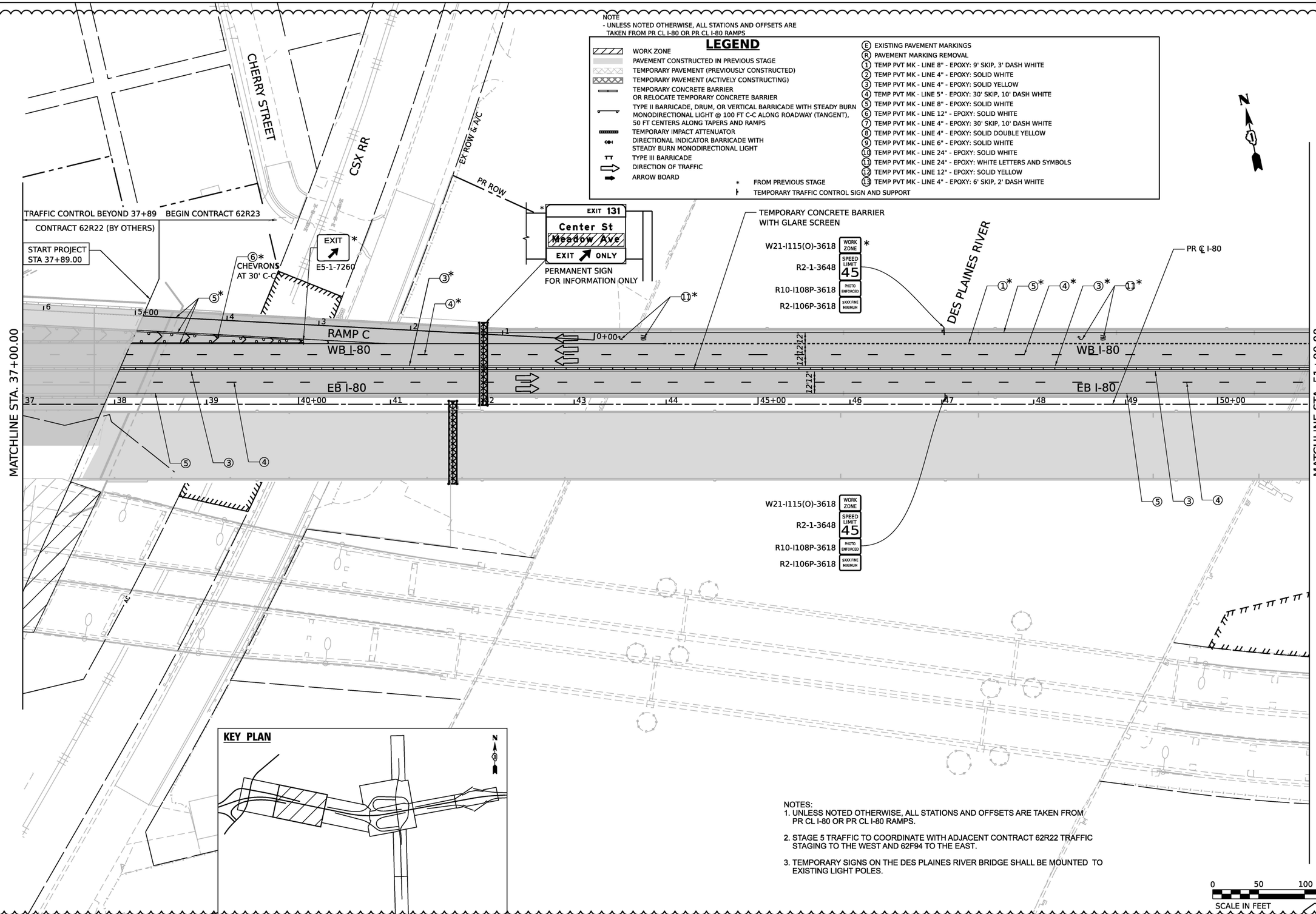

NOTES:
1. UNLESS NOTED OTHERWISE, ALL STATIONS AND OFFSETS ARE TAKEN FROM PR CL I-80 OR PR CL I-80 RAMPS.
2. STAGE 5 TRAFFIC TO COORDINATE WITH ADJACENT CONTRACT 62R22 TRAFFIC STAGING TO THE WEST AND 62F94 TO THE EAST.
3. TEMPORARY SIGNS ON THE DES PLAINES RIVER BRIDGE SHALL BE MOUNTED TO EXISTING LIGHT POLES.

0 50 100 150
SCALE IN FEET

MODEL: Default
FILE NAME: pw://transystems-pw.bentley.com:transyscorp-pw1-hosted/Documents/Projects_2018/CH401/401180022/03-WSP/CAD/62R23-RB-1/Sheets/Civil/D162R23-sht-staging5-2

WSP USA Inc.
30 N. LASALLE STREET
SUITE 4200
CHICAGO, IL 60602
TEL: (312) 782-8150

USER NAME = USGP718052	DESIGNED - HA	REVISED -	01/30/2026
	DRAWN - HA	REVISED -	
PLOT SCALE = 100.000 ' / in.	CHECKED - SW	REVISED -	
PLOT DATE = 1/28/2026	DATE - 11/07/2025	REVISED -	

STATE OF ILLINOIS
DEPARTMENT OF TRANSPORTATION

SUGGESTED STAGES OF CONSTRUCTION AND TRAFFIC CONTROL
STAGE 5

SCALE: 1" = 50' | SHEET 2 OF 3 SHEETS | STA. TO STA.

F.A.I. RTE.	SECTION	COUNTY	TOTAL SHEETS	SHEET NO.
80	FAI 80 21 STRUCTURE 2	WILL	1230	220
		CONTRACT NO. 62R23		
		ILLINOIS	FED. AID PROJECT	

LEGEND

- WORK ZONE
- PAVEMENT CONSTRUCTED IN PREVIOUS STAGE
- TEMPORARY PAVEMENT (PREVIOUSLY CONSTRUCTED)
- TEMPORARY PAVEMENT (ACTIVELY CONSTRUCTING)
- TEMPORARY CONCRETE BARRIER OR RELOCATE TEMPORARY CONCRETE BARRIER
- TYPE II BARRICADE, DRUM, OR VERTICAL BARRICADE WITH STEADY BURN MONODIRECTIONAL LIGHT @ 100 FT C-C ALONG ROADWAY (TANGENT), 50 FT CENTERS ALONG TAPERS AND RAMPS
- TEMPORARY IMPACT ATTENUATOR
- DIRECTIONAL INDICATOR BARRICADE WITH STEADY BURN MONODIRECTIONAL LIGHT
- TYPE III BARRICADE
- DIRECTION OF TRAFFIC
- ARROW BOARD

* FROM PREVIOUS STAGE

TEMPORARY TRAFFIC CONTROL SIGN AND SUPPORT

(E) EXISTING PAVEMENT MARKINGS
(R) PAVEMENT MARKING REMOVAL
(1) TEMP PVT MK - LINE 8" - EPOXY: 9' SKIP, 3' DASH WHITE
(2) TEMP PVT MK - LINE 4" - EPOXY: SOLID WHITE
(3) TEMP PVT MK - LINE 4" - EPOXY: SOLID YELLOW
(4) TEMP PVT MK - LINE 5" - EPOXY: 30' SKIP, 10' DASH WHITE
(5) TEMP PVT MK - LINE 8" - EPOXY: SOLID WHITE
(6) TEMP PVT MK - LINE 12" - EPOXY: SOLID WHITE
(7) TEMP PVT MK - LINE 4" - EPOXY: 30' SKIP, 10' DASH WHITE
(8) TEMP PVT MK - LINE 4" - EPOXY: SOLID DOUBLE YELLOW
(9) TEMP PVT MK - LINE 6" - EPOXY: SOLID WHITE
(10) TEMP PVT MK - LINE 24" - EPOXY: SOLID WHITE
(11) TEMP PVT MK - LINE 24" - EPOXY: WHITE LETTERS AND SYMBOLS
(12) TEMP PVT MK - LINE 12" - EPOXY: SOLID YELLOW
(13) TEMP PVT MK - LINE 4" - EPOXY: 6' SKIP, 2' DASH WHITE

ADDITIONAL GUIDE SIGN MODIFICATIONS

EXIT 132 — 52 — RAMP CLOSED — Chicago St — 1 MILE — TEMP INFO SIGN
PROPOSED EB I-80 SIGN 1 MILE WEST OF CHICAGO STREET INTERCHANGE

EXIT 132 — 52 — RAMP CLOSED — Chicago St — 1/2 MILE — TEMP INFO SIGN
PROPOSED EB I-80 SIGN 1/2 MILE WEST OF CHICAGO STREET INTERCHANGE

EXIT 132 — 52 — RAMP CLOSED — Chicago St — EXIT ONLY — TEMP INFO SIGN
PROPOSED EB I-80 SIGN 1/4 MILE WEST OF CHICAGO STREET INTERCHANGE

FOR IMFORMATION ONLY SEE 62F94 PLANS FOR DETAILS

NOTES:
1. UNLESS NOTED OTHERWISE, ALL STATIONS AND OFFSETS ARE TAKEN FROM PR CL I-80 OR PR CL I-80 RAMPS.
2. STAGE 5 TRAFFIC TO COORDINATE WITH ADJACENT CONTRACT 62R22 TRAFFIC STAGING TO THE WEST AND 62F94 TO THE EAST.
3. TEMPORARY SIGNS ON THE DES PLAINES RIVER BRIDGE SHALL BE MOUNTED TO EXISTING LIGHT POLES.

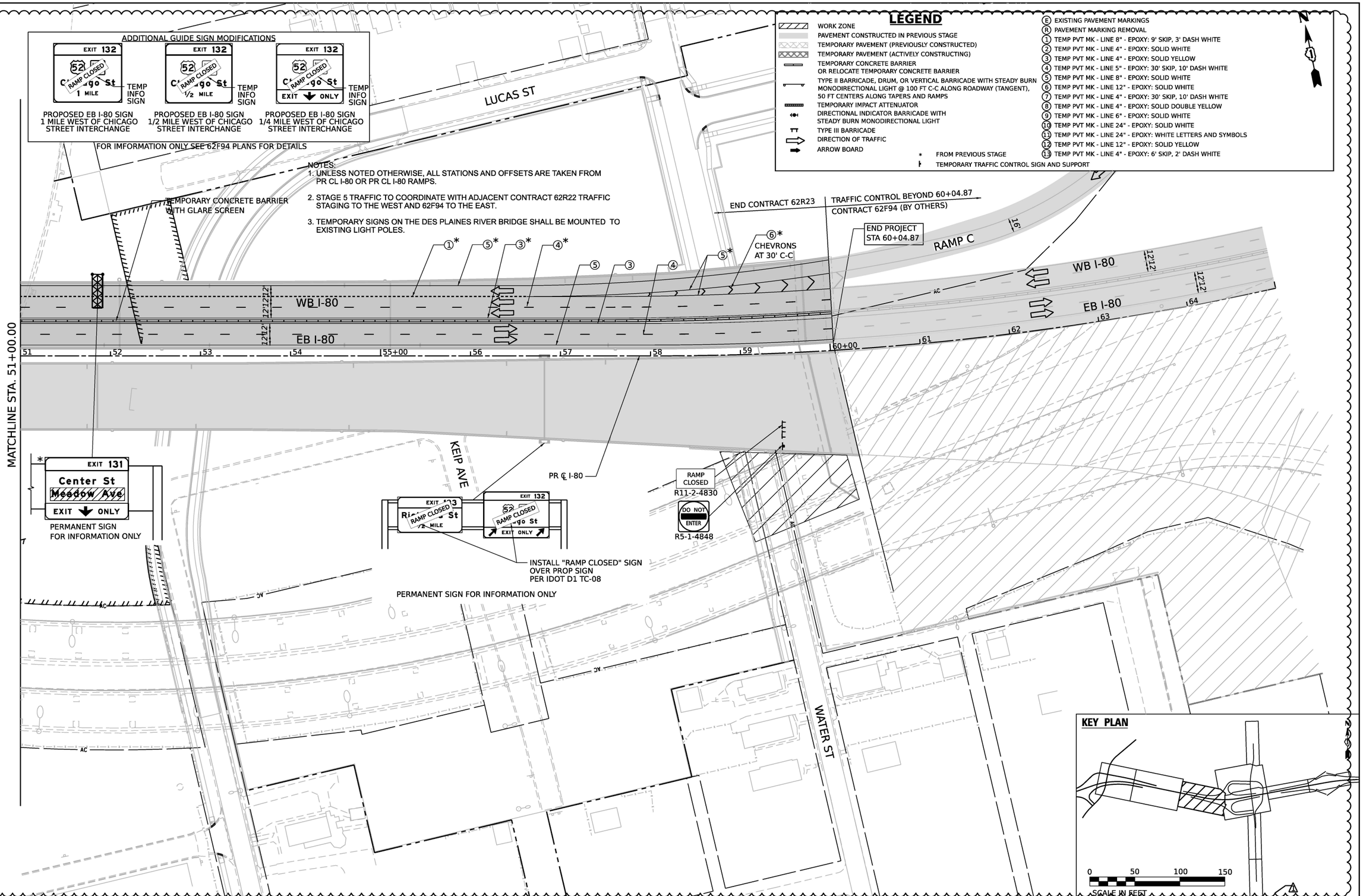

MODEL: Default
FILE NAME: pw://transystems-pw.bentley.com:transyscorp-pw1-hosted/Documents/Projects_2018/CH401/401180022/03-WSP/CAD/62R23-RB-1/Sheets/Civil/01 62R23-sht-staging5-3

WSP USA Inc.
30 N. LASALLE STREET
SUITE 4200
CHICAGO, IL 60602
TEL: (312) 782-8150

USER NAME = USGP718052	DESIGNED - HA	REVISED - 1 01/30/2026	
	DRAWN - JFA	REVISED -	
PLOT SCALE = 100.000 ' / in.	CHECKED - SW	REVISED -	
PLOT DATE = 1/28/2026	DATE - 11/07/2025	REVISED -	

STATE OF ILLINOIS
DEPARTMENT OF TRANSPORTATION

SUGGESTED STAGES OF CONSTRUCTION AND TRAFFIC CONTROL
STAGE 5

SCALE: 1" = 50' | SHEET 3 OF 3 SHEETS | STA. TO STA.

F.A.I. RTE.	SECTION	COUNTY	TOTAL SHEETS	SHEET NO.
80	FAI 80 21 STRUCTURE 2	WILL	1230	221
		CONTRACT NO. 62R23		
		ILLINOIS	FED. AID PROJECT	

THIS SHEET DELETED

MODEL: Default
FILE NAME: pw://transystems-pw.bentley.com:transysccorp-pw1-hosted/Documents/Projects_2018/CH401/401180022/03-WSP/CAD/62R23-Rb-1/Sheets/CM/D162R23-sht-EAST-MOTStages5A-02.dgn

USER NAME = tmmroz	DESIGNED - JAP	REVISED - 1 01/30/2026	STATE OF ILLINOIS DEPARTMENT OF TRANSPORTATION	SUGGESTED STAGES OF CONSTRUCTION AND TRAFFIC CONTROL STAGE 5A	
	DRAWN - TMM	REVISED -			
PLOT SCALE = 100.000 ' / in.	CHECKED - JIR	REVISED -			
PLOT DATE = 1/28/2026	DATE - 11/7/2025	REVISED -		SCALE: 1" = 50' SHEET 4 OF 8 SHEETS STA. TO STA.	

F.A.I. RTE.	SECTION	COUNTY	TOTAL SHEETS	SHEET NO.
80	FAI 80 21 STRUCTURE 2	WILL	1230	222
		CONTRACT NO. 62R23		
		ILLINOIS FED. AID PROJECT		

THIS SHEET DELETED

MODEL: Default
FILE NAME: pw://transystems-pw.bentley.com:transyscorp-pw1-hosted/Documents/Projects_2018/CH401/401180022/03-WSP/CAD/62R23-Rb-1/Sheets/CM0162R23-sht-EAST-MOTStage5A-03.dgn

USER NAME = tmmroz	DESIGNED - JAP	REVISED - 1 01/30/2026	STATE OF ILLINOIS DEPARTMENT OF TRANSPORTATION	SUGGESTED STAGES OF CONSTRUCTION AND TRAFFIC CONTROL STAGE 5A	F.A.I. RTE. 80 / SECTION FAI 80 21 STRUCTURE 2 / COUNTY WILL / TOTAL SHEETS 1230 / SHEET NO. 223
	DRAWN - TMM	REVISED -			CONTRACT NO. 62R23
PLOT SCALE = 100.000 ' / in.	CHECKED - JIR	REVISED -			
PLOT DATE = 1/28/2026	DATE - 11/7/2025	REVISED -		SCALE: 1" = 50' / SHEET 5 OF 8 SHEETS / STA. TO STA.	ILLINOIS FED. AID PROJECT

THIS SHEET DELETED

MODEL: Default
FILE NAME: pw://transystems-pw.bentley.com:transysccorp-pw1-hosted/Documents/Projects_2018/CH401/401180022/03-WSP/CAD/62R23-Rb-1/Sheets/CKM0162R23-sht-EAST-MOTStage5A-04.dgn

USER NAME = tmmroz	DESIGNED - JAP	REVISED - 1 01/30/2026	STATE OF ILLINOIS DEPARTMENT OF TRANSPORTATION	SUGGESTED STAGES OF CONSTRUCTION AND TRAFFIC CONTROL STAGE 5A	F.A.I. RTE. 80 / SECTION FAI 80 21 STRUCTURE 2 / COUNTY WILL / TOTAL SHEETS 1230 / SHEET NO. 224
	DRAWN - TMM	REVISED -			CONTRACT NO. 62R23
PLOT SCALE = 100.000 ' / in.	CHECKED - JIR	REVISED -			
PLOT DATE = 1/28/2026	DATE - 11/7/2025	REVISED -		SCALE: 1" = 50' / SHEET 6 OF 8 SHEETS / STA. TO STA.	ILLINOIS / FED. AID PROJECT

THIS SHEET DELETED

MODEL: Default
FILE NAME: pw://transystems-pw.bentley.com:transyscorp-pw1-hosted/Documents/Projects_2018/CH401/401180022/03-WSP/CAD/62R23-Rb-1/Sheets/CM0162R23-sht-EAST-MOTStage5A-05.dgn

USER NAME = tmmroz	DESIGNED - JAP	REVISED - 1 01/30/2026	STATE OF ILLINOIS DEPARTMENT OF TRANSPORTATION	SUGGESTED STAGES OF CONSTRUCTION AND TRAFFIC CONTROL STAGE 5A	
	DRAWN - TMM	REVISED -			
PLOT SCALE = 100.000 ' / in.	CHECKED - JIR	REVISED -			
PLOT DATE = 1/28/2026	DATE - 11/7/2025	REVISED -		SCALE: 1" = 50' SHEET 7 OF 8 SHEETS STA. TO STA.	

F.A.I. RTE.	SECTION	COUNTY	TOTAL SHEETS	SHEET NO.
80	FAI 80 21 STRUCTURE 2	WILL	1230	225
		CONTRACT NO. 62R23		
		ILLINOIS FED. AID PROJECT		

THIS SHEET DELETED

MODEL: Default
FILE NAME: pw://transystems-pw.bentley.com:transyscorp-pw1-hosted/Documents/Projects_2018/CH401/401180022/03-WSP/CAD/62R23-Rb-1/Sheets/CM0162R23-sht-EAST-MOTStage5A-06.dgn

USER NAME = tmmroz	DESIGNED - JAP	REVISED - 1 01/30/2026	STATE OF ILLINOIS DEPARTMENT OF TRANSPORTATION	SUGGESTED STAGES OF CONSTRUCTION AND TRAFFIC CONTROL STAGE 5A	F.A.I. RTE. 80 / SECTION FAI 80 21 STRUCTURE 2 / COUNTY WILL / TOTAL SHEETS 1230 / SHEET NO. 226
	DRAWN - TMM	REVISED -			CONTRACT NO. 62R23
PLOT SCALE = 100.000 ' / in.	CHECKED - JIR	REVISED -		SCALE: 1" = 50' / SHEET 8 OF 8 SHEETS / STA. TO STA.	ILLINOIS / FED. AID PROJECT
PLOT DATE = 1/28/2026	DATE - 11/7/2025	REVISED -			

THIS SHEET DELETED

MODEL: Default
FILE NAME: pw://transystems-pw.bentley.com:transyscorp-pw1-hosted/Documents/Projects_2018/CH401/401180022/03-WSP/CAD/62R23-RB-1/Sheets/CMD162R23-int-EAST-MOTStage5B-01.dgn

USER NAME = tmmroz	DESIGNED - JAP	REVISED - 1 01/30/2026	STATE OF ILLINOIS DEPARTMENT OF TRANSPORTATION	SUGGESTED STAGES OF CONSTRUCTION AND TRAFFIC CONTROL STAGE 5B	F.A.I. RTE.	SECTION	COUNTY	TOTAL SHEETS	SHEET NO.
	DRAWN - TMM	REVISED -			80	FAI 80 21 STRUCTURE 2	WILL	1230	227
PLOT SCALE = 100.000 ' / in.	CHECKED - JIR	REVISED -					CONTRACT NO. 62R23		
PLOT DATE = 1/28/2026	DATE - 11/7/2025	REVISED -		SCALE: 1" = 50' SHEET 3 OF 8 SHEETS STA. TO STA.			ILLINOIS	FED. AID PROJECT	

THIS SHEET DELETED

MODEL: Default
FILE NAME: pw://transystems-pw.bentley.com:transyscorp-pw1-hosted/Documents/Projects_2018/CH401/401180022/03-WSP/CAD/62R23-RB-1/Sheets/CMD162R23-sht-EAST-MOTStage5B-02.dgn

USER NAME = tmmroz	DESIGNED - JAP	REVISED - 1 01/30/2026	STATE OF ILLINOIS DEPARTMENT OF TRANSPORTATION	SUGGESTED STAGES OF CONSTRUCTION AND TRAFFIC CONTROL STAGE 5B	F.A.I. RTE. 80 / SECTION FAI 80 21 STRUCTURE 2 / COUNTY WILL / TOTAL SHEETS 1230 / SHEET NO. 228
	DRAWN - TMM	REVISED -			CONTRACT NO. 62R23
PLOT SCALE = 100.000 ' / in.	CHECKED - JIR	REVISED -		SCALE: 1" = 50' / SHEET 4 OF 8 SHEETS / STA. TO STA.	ILLINOIS FED. AID PROJECT
PLOT DATE = 1/28/2026	DATE - 11/7/2025	REVISED -			

THIS SHEET DELETED

MODEL: Default
FILE NAME: pw://transystems-pw.bentley.com:transyscorp-pw1-hosted/Documents/Projects_2018/CH401/401180022/03-WSP/CAD/62R23-RB-1/Sheets/CMD162R23-sht-EAST-MOTStage5B-03.dgn

USER NAME = tmmroz	DESIGNED - JAP	REVISED - 1 01/30/2026	STATE OF ILLINOIS DEPARTMENT OF TRANSPORTATION	SUGGESTED STAGES OF CONSTRUCTION AND TRAFFIC CONTROL STAGE 5B			F.A.I. RTE.	SECTION	COUNTY	TOTAL SHEETS	SHEET NO.
	DRAWN - TMM	REVISED -					80	FAI 80 21 STRUCTURE 2	WILL	1230	229
PLOT SCALE = 100.000 ' / in.	CHECKED - JIR	REVISED -							CONTRACT NO. 62R23		
PLOT DATE = 1/28/2026	DATE - 11/7/2025	REVISED -		SCALE: 1" = 50'	SHEET 5 OF 8 SHEETS	STA. TO STA.		ILLINOIS	FED. AID PROJECT		

THIS SHEET DELETED

MODEL: Default
FILE NAME: pw://transystems-pw.bentley.com:transyscorp-pw1-hosted/Documents/Projects_2018/CH401/401180022/03-WSP/CAD/62R23-RB-1/Sheets/CMD162R23-sht-EAST-MOTStage5B-04.dgn

USER NAME = tmmroz	DESIGNED - JAP	REVISED - 1 01/30/2026	STATE OF ILLINOIS DEPARTMENT OF TRANSPORTATION	SUGGESTED STAGES OF CONSTRUCTION AND TRAFFIC CONTROL STAGE 5B			F.A.I. RTE.	SECTION	COUNTY	TOTAL SHEETS	SHEET NO.
	DRAWN - TMM	REVISED -					80	FAI 80 21 STRUCTURE 2	WILL	1230	230
PLOT SCALE = 100.000 ' / in.	CHECKED - JIR	REVISED -							CONTRACT NO. 62R23		
PLOT DATE = 1/28/2026	DATE - 11/7/2025	REVISED -		SCALE: 1" = 50'	SHEET 6 OF 8 SHEETS	STA. TO STA.		ILLINOIS	FED. AID PROJECT		

THIS SHEET DELETED

MODEL: Default
FILE NAME: pw://transystems-pw.bentley.com:transyscorp-pw1-hosted/Documents/Projects_2018/CH401/401180022/03-WSP/CAD/62R23-RB-1/Sheets/CMD162R23-int-EAST-MOTStage5B-05.dgn

USER NAME = tmmroz	DESIGNED - JAP	REVISED - 1 01/30/2026	STATE OF ILLINOIS DEPARTMENT OF TRANSPORTATION	SUGGESTED STAGES OF CONSTRUCTION AND TRAFFIC CONTROL STAGE 5B	F.A.I. RTE. 80 / SECTION FAI 80 21 STRUCTURE 2 / COUNTY WILL / TOTAL SHEETS 1230 / SHEET NO. 231
	DRAWN - TMM	REVISED -			CONTRACT NO. 62R23
PLOT SCALE = 100.000 ' / in.	CHECKED - JIR	REVISED -			
PLOT DATE = 1/28/2026	DATE - 11/7/2025	REVISED -		SCALE: 1" = 50' / SHEET 7 OF 8 SHEETS / STA. / TO STA.	ILLINOIS / FED. AID PROJECT

THIS SHEET DELETED

MODEL: Default
FILE NAME: pw://transystems-pw.bentley.com:transyscorp-pw1-hosted/Documents/Projects_2018/CH401/401180022/03-WSP/CAD/62R23-RB-1/Sheets/CMD162R23-sht-EAST-MOTStage5B-06.dgn

USER NAME = tmmroz	DESIGNED - JAP	REVISED - 1 01/30/2026	STATE OF ILLINOIS DEPARTMENT OF TRANSPORTATION	SUGGESTED STAGES OF CONSTRUCTION AND TRAFFIC CONTROL STAGE 5B	F.A.I. RTE. 80 / SECTION FAI 80 21 STRUCTURE 2 / COUNTY WILL / TOTAL SHEETS 1230 / SHEET NO. 232
	DRAWN - TMM	REVISED -			CONTRACT NO. 62R23
PLOT SCALE = 100.000 ' / in.	CHECKED - JIR	REVISED -		SCALE: 1" = 50' / SHEET 8 OF 8 SHEETS / STA. TO STA.	ILLINOIS FED. AID PROJECT
PLOT DATE = 1/28/2026	DATE - 11/7/2025	REVISED -			

NOTES:
1. UNLESS NOTED OTHERWISE, ALL STATIONS AND OFFSETS ARE TAKEN FROM PR CL I-80 OR PR CL I-80 RAMPS.
2. STAGE 6 TRAFFIC TO COORDINATE WITH ADJACENT CONTRACT 62R22 TRAFFIC STAGING TO THE WEST AND 62F94 TO THE EAST.
3. TEMPORARY SIGNS ON THE DES PLAINES RIVER BRIDGE SHALL BE MOUNTED TO EXISTING LIGHT POLES.
4. EX DRB TO BE REMOVED AS PART OF A SEPARATE CONTRACT.

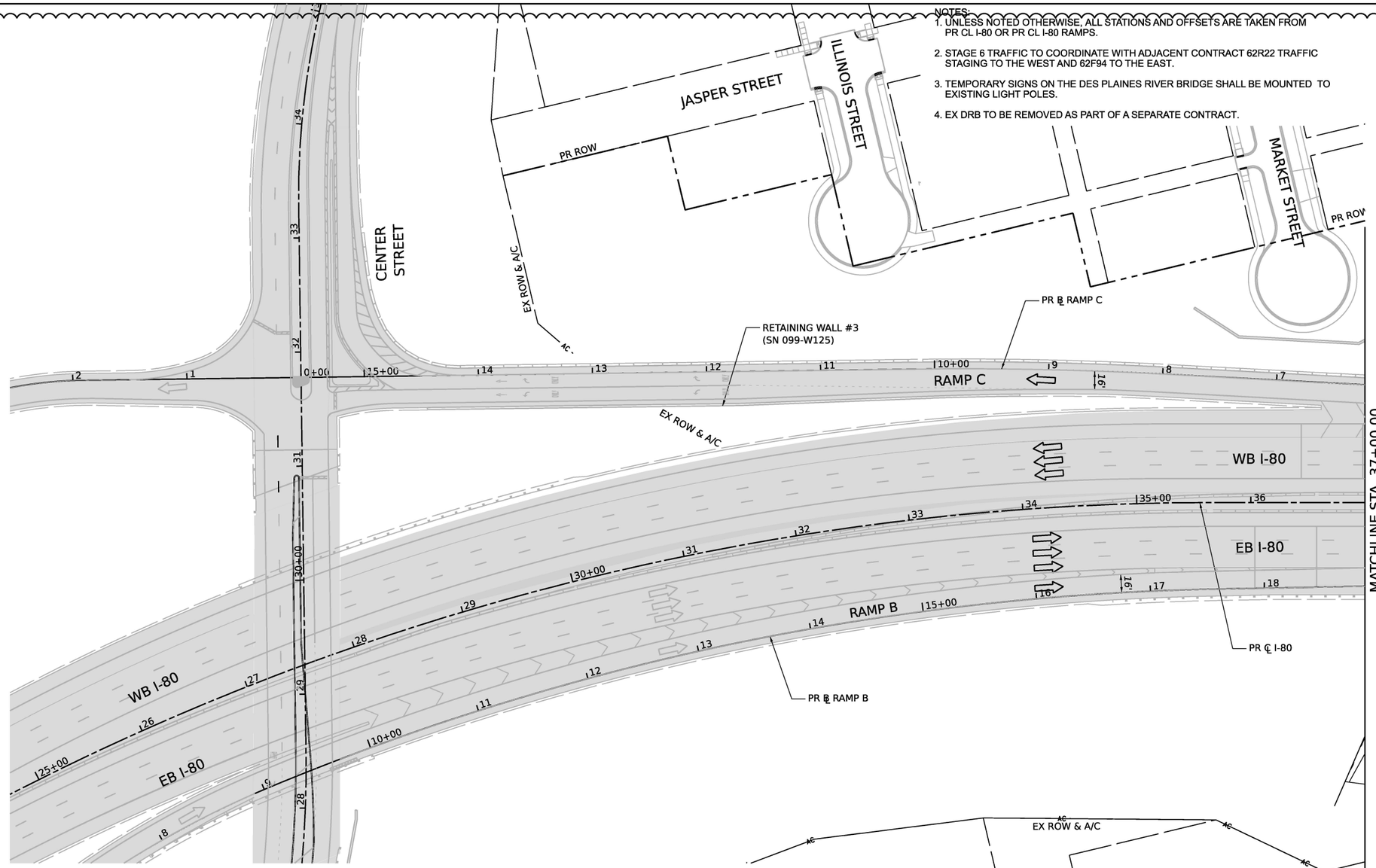

NOTE
- UNLESS NOTED OTHERWISE, ALL STATIONS AND OFFSETS ARE TAKEN FROM PR CL I-80 OR PR CL I-80 RAMPS

LEGEND

- WORK ZONE
- PAVEMENT CONSTRUCTED IN PREVIOUS STAGE
- TEMPORARY PAVEMENT (PREVIOUSLY CONSTRUCTED)
- TEMPORARY PAVEMENT (ACTIVELY CONSTRUCTING)
- TEMPORARY CONCRETE BARRIER OR RELOCATE TEMPORARY CONCRETE BARRIER
- TYPE II BARRICADE, DRUM, OR VERTICAL BARRICADE WITH STEADY BURN MONODIRECTIONAL LIGHT @ 100 FT C-C ALONG ROADWAY (TANGENT), 50 FT CENTERS ALONG TAPERS AND RAMPS
- TEMPORARY IMPACT ATTENUATOR
- DIRECTIONAL INDICATOR BARRICADE WITH STEADY BURN MONODIRECTIONAL LIGHT
- TYPE III BARRICADE
- DIRECTION OF TRAFFIC
- ARROW BOARD

* FROM PREVIOUS STAGE
TEMPORARY TRAFFIC CONTROL SIGN AND SUPPORT

(E) EXISTING PAVEMENT MARKINGS
(R) PAVEMENT MARKING REMOVAL
(1) TEMP PVT MK - LINE 8" - EPOXY: 9' SKIP, 3' DASH WHITE
(2) TEMP PVT MK - LINE 4" - EPOXY: SOLID WHITE
(3) TEMP PVT MK - LINE 4" - EPOXY: SOLID YELLOW
(4) TEMP PVT MK - LINE 5" - EPOXY: 30' SKIP, 10' DASH WHITE
(5) TEMP PVT MK - LINE 8" - EPOXY: SOLID WHITE
(6) TEMP PVT MK - LINE 12" - EPOXY: SOLID WHITE
(7) TEMP PVT MK - LINE 4" - EPOXY: 30' SKIP, 10' DASH WHITE
(8) TEMP PVT MK - LINE 4" - EPOXY: SOLID DOUBLE YELLOW
(9) TEMP PVT MK - LINE 6" - EPOXY: SOLID WHITE
(10) TEMP PVT MK - LINE 24" - EPOXY: SOLID WHITE
(11) TEMP PVT MK - LINE 24" - EPOXY: WHITE LETTERS AND SYMBOLS
(12) TEMP PVT MK - LINE 12" - EPOXY: SOLID YELLOW
(13) TEMP PVT MK - LINE 4" - EPOXY: 6' SKIP, 2' DASH WHITE

N

0 50 100 150
SCALE IN FEET

KEY PLAN

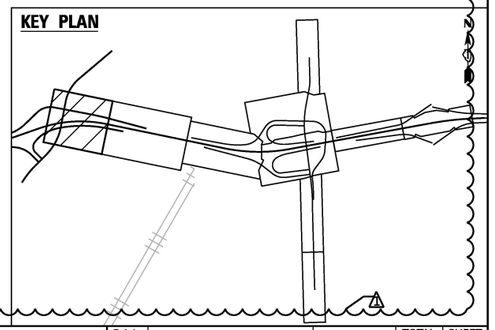

MODEL: Default
FILE NAME: pw://transystems-pw.bentley.com:transyscorp-pw1-hosted/Documents/Projects_2018/CH401/401180022/03-WSP/CAD/62R23-RB-1/Sheets/Cul/D162R23-sht-staging6-1

WSP USA Inc.
30 N. LASALLE STREET
SUITE 4200
CHICAGO, IL 60602
TEL: (312) 782-8150

USER NAME = USGP718052	DESIGNED - HA	REVISED - 1 01/30/2026	
	DRAWN - HA	REVISED -	
PLOT SCALE = 100.000 ' / in.	CHECKED - SW	REVISED -	
PLOT DATE = 1/28/2026	DATE - 11/07/2025	REVISED -	

STATE OF ILLINOIS
DEPARTMENT OF TRANSPORTATION

SUGGESTED STAGES OF CONSTRUCTION AND TRAFFIC CONTROL
STAGE 6

SCALE: 1" = 50' | SHEET 1 OF 3 SHEETS | STA. | TO STA.

F.A.I. RTE.	SECTION	COUNTY	TOTAL SHEETS	SHEET NO.
80	FAI 80 21 STRUCTURE 2	WILL	1230	232A
		CONTRACT NO. 62R23		
		ILLINOIS	FED. AID PROJECT	

NOTE
- UNLESS NOTED OTHERWISE, ALL STATIONS AND OFFSETS ARE TAKEN FROM PR CL I-80 OR PR CL I-80 RAMPS

LEGEND

- WORK ZONE
- PAVEMENT CONSTRUCTED IN PREVIOUS STAGE
- TEMPORARY PAVEMENT (PREVIOUSLY CONSTRUCTED)
- TEMPORARY PAVEMENT (ACTIVELY CONSTRUCTING)
- TEMPORARY CONCRETE BARRIER OR RELOCATE TEMPORARY CONCRETE BARRIER
- TYPE II BARRICADE, DRUM, OR VERTICAL BARRICADE WITH STEADY BURN MONODIRECTIONAL LIGHT @ 100 FT C-C ALONG ROADWAY (TANGENT), 50 FT CENTERS ALONG TAPERS AND RAMPS
- TEMPORARY IMPACT ATTENUATOR
- DIRECTIONAL INDICATOR BARRICADE WITH STEADY BURN MONODIRECTIONAL LIGHT
- TYPE III BARRICADE
- DIRECTION OF TRAFFIC
- ARROW BOARD
- * FROM PREVIOUS STAGE
- TEMPORARY TRAFFIC CONTROL SIGN AND SUPPORT

(E) EXISTING PAVEMENT MARKINGS
(R) PAVEMENT MARKING REMOVAL
(1) TEMP PVT MK - LINE 8" - EPOXY: 9' SKIP, 3' DASH WHITE
(2) TEMP PVT MK - LINE 4" - EPOXY: SOLID WHITE
(3) TEMP PVT MK - LINE 4" - EPOXY: SOLID YELLOW
(4) TEMP PVT MK - LINE 5" - EPOXY: 30' SKIP, 10' DASH WHITE
(5) TEMP PVT MK - LINE 8" - EPOXY: SOLID WHITE
(6) TEMP PVT MK - LINE 12" - EPOXY: SOLID WHITE
(7) TEMP PVT MK - LINE 4" - EPOXY: 30' SKIP, 10' DASH WHITE
(8) TEMP PVT MK - LINE 4" - EPOXY: SOLID DOUBLE YELLOW
(9) TEMP PVT MK - LINE 6" - EPOXY: SOLID WHITE
(10) TEMP PVT MK - LINE 24" - EPOXY: SOLID WHITE
(11) TEMP PVT MK - LINE 24" - EPOXY: WHITE LETTERS AND SYMBOLS
(12) TEMP PVT MK - LINE 12" - EPOXY: SOLID YELLOW
(13) TEMP PVT MK - LINE 4" - EPOXY: 6' SKIP, 2' DASH WHITE

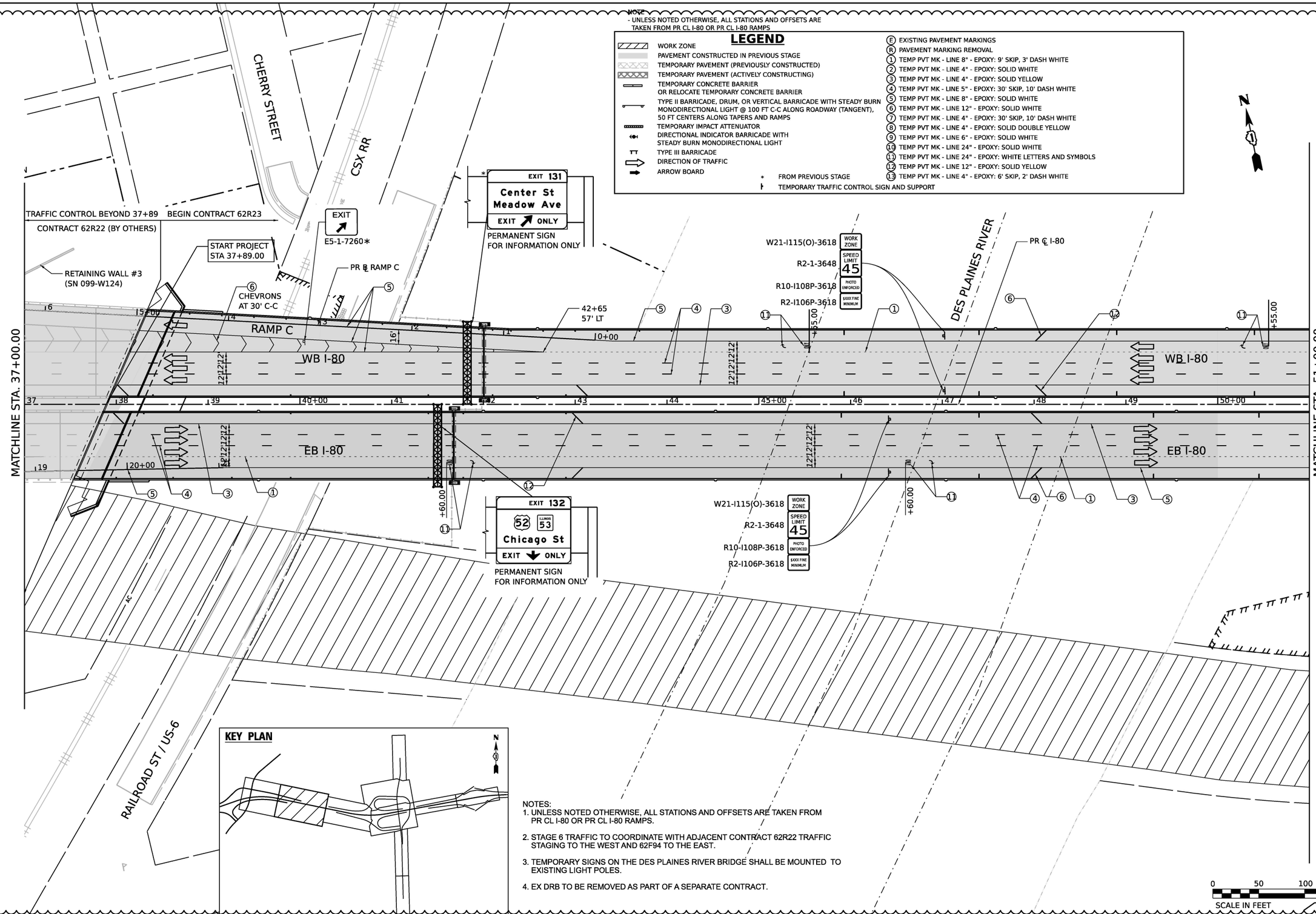

NOTES:
1. UNLESS NOTED OTHERWISE, ALL STATIONS AND OFFSETS ARE TAKEN FROM PR CL I-80 OR PR CL I-80 RAMPS.
2. STAGE 6 TRAFFIC TO COORDINATE WITH ADJACENT CONTRACT 62R22 TRAFFIC STAGING TO THE WEST AND 62F94 TO THE EAST.
3. TEMPORARY SIGNS ON THE DES PLAINES RIVER BRIDGE SHALL BE MOUNTED TO EXISTING LIGHT POLES.
4. EX DRB TO BE REMOVED AS PART OF A SEPARATE CONTRACT.

0 50 100 150
SCALE IN FEET

MODEL: Default
FILE NAME: pw://transystems-pw.bentley.com:transyscorp-pw1-hosted/Documents/Projects_2018/CH401/401180022/03-WSP/CAD/62R23-RB-1/Sheets/Civil/D162R23-sht-staging6-2

WSP USA Inc.
30 N. LASALLE STREET
SUITE 4200
CHICAGO, IL 60602
TEL: (312) 782-8150

USER NAME = USGP718052	DESIGNED - HA	REVISED - 01/30/2026	
	DRAWN - HA	REVISED -	
PLOT SCALE = 100.000 ' / in.	CHECKED - SW	REVISED -	
PLOT DATE = 1/28/2026	DATE - 11/07/2025	REVISED -	

STATE OF ILLINOIS
DEPARTMENT OF TRANSPORTATION

SUGGESTED STAGES OF CONSTRUCTION AND TRAFFIC CONTROL
STAGE 6

SCALE: 1" = 50' | SHEET 2 OF 3 SHEETS | STA. TO STA.

F.A.I. RTE.	SECTION	COUNTY	TOTAL SHEETS	SHEET NO.
80	FAI 80 21 STRUCTURE 2	WILL	1230	232B
		CONTRACT NO. 62R23		
		ILLINOIS	FED. AID PROJECT	

LEGEND

- WORK ZONE
- PAVEMENT CONSTRUCTED IN PREVIOUS STAGE
- TEMPORARY PAVEMENT (PREVIOUSLY CONSTRUCTED)
- TEMPORARY PAVEMENT (ACTIVELY CONSTRUCTING)
- TEMPORARY CONCRETE BARRIER OR RELOCATE TEMPORARY CONCRETE BARRIER
- TYPE II BARRICADE, DRUM, OR VERTICAL BARRICADE WITH STEADY BURN MONODIRECTIONAL LIGHT @ 100 FT C-C ALONG ROADWAY (TANGENT), 50 FT CENTERS ALONG TAPERS AND RAMPS
- TEMPORARY IMPACT ATTENUATOR
- DIRECTIONAL INDICATOR BARRICADE WITH STEADY BURN MONODIRECTIONAL LIGHT
- TYPE III BARRICADE
- DIRECTION OF TRAFFIC
- ARROW BOARD
- * FROM PREVIOUS STAGE
- TEMPORARY TRAFFIC CONTROL SIGN AND SUPPORT

- (E) EXISTING PAVEMENT MARKINGS
- (R) PAVEMENT MARKING REMOVAL
- (1) TEMP PVT MK - LINE 8" - EPOXY: 9' SKIP, 3' DASH WHITE
- (2) TEMP PVT MK - LINE 4" - EPOXY: SOLID WHITE
- (3) TEMP PVT MK - LINE 4" - EPOXY: SOLID YELLOW
- (4) TEMP PVT MK - LINE 5" - EPOXY: 30' SKIP, 10' DASH WHITE
- (5) TEMP PVT MK - LINE 8" - EPOXY: SOLID WHITE
- (6) TEMP PVT MK - LINE 12" - EPOXY: SOLID WHITE
- (7) TEMP PVT MK - LINE 4" - EPOXY: 30' SKIP, 10' DASH WHITE
- (8) TEMP PVT MK - LINE 4" - EPOXY: SOLID DOUBLE YELLOW
- (9) TEMP PVT MK - LINE 6" - EPOXY: SOLID WHITE
- (10) TEMP PVT MK - LINE 24" - EPOXY: SOLID WHITE
- (11) TEMP PVT MK - LINE 24" - EPOXY: WHITE LETTERS AND SYMBOLS
- (12) TEMP PVT MK - LINE 12" - EPOXY: SOLID YELLOW
- (13) TEMP PVT MK - LINE 4" - EPOXY: 6' SKIP, 2' DASH WHITE

NOTES:
1. UNLESS NOTED OTHERWISE, ALL STATIONS AND OFFSETS ARE TAKEN FROM PR CL I-80 OR PR CL I-80 RAMPS.
2. STAGE 6 TRAFFIC TO COORDINATE WITH ADJACENT CONTRACT 62R22 TRAFFIC STAGING TO THE WEST AND 62F94 TO THE EAST.
3. TEMPORARY SIGNS ON THE DES PLAINES RIVER BRIDGE SHALL BE MOUNTED TO EXISTING LIGHT POLES.
4. EX DRB TO BE REMOVED AS PART OF A SEPARATE CONTRACT.

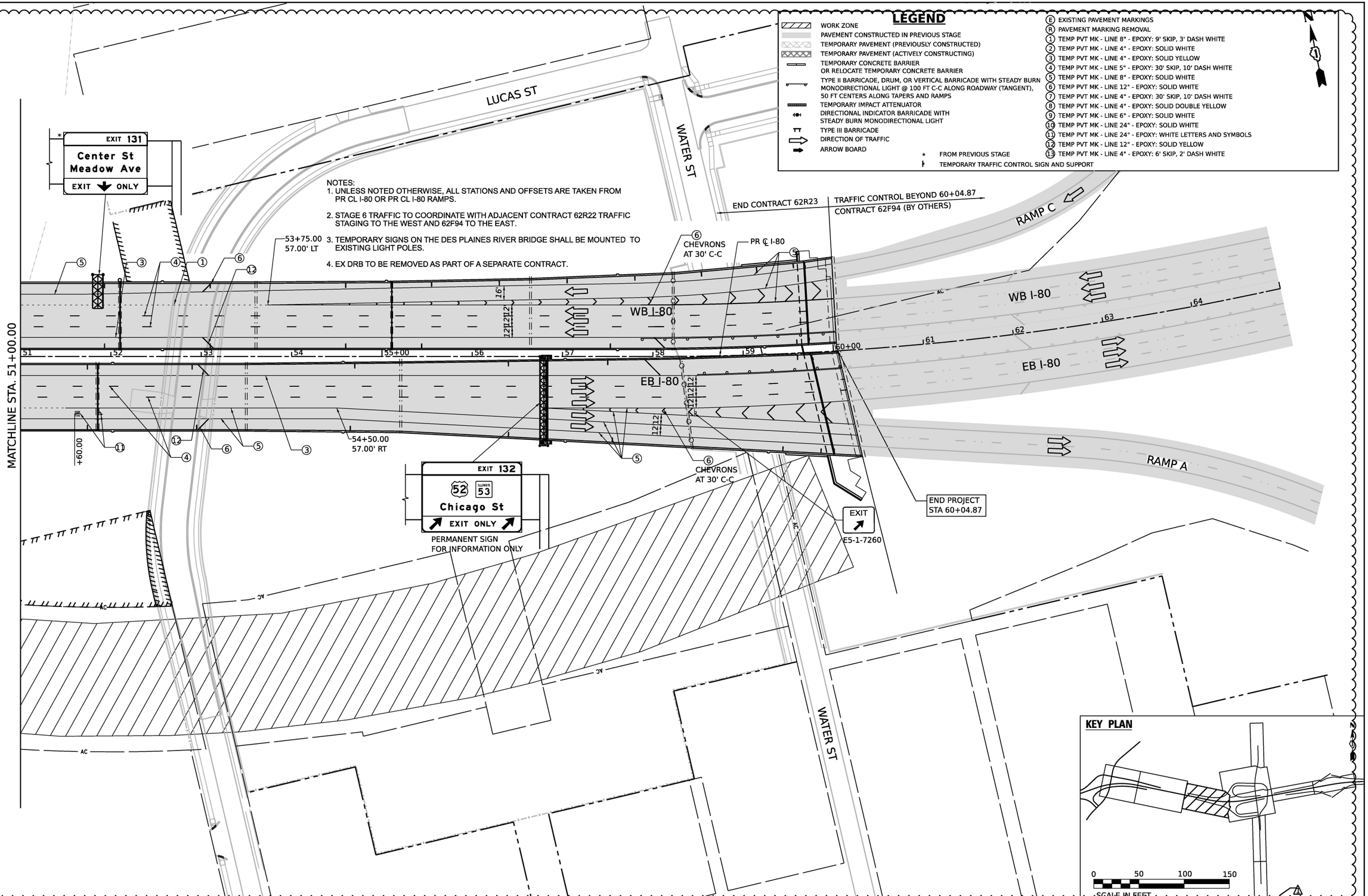

MODEL: Default
FILE NAME: pw://transystems-pw.bentley.com:transyscorp-pw1-hosted/Documents/Projects_2018/CH401/401180022/03-WSP/CAD/62R23-RB-1/Sheets/Civil/D162R23-sht-staging6-3

WSP USA Inc.
30 N. LASALLE STREET
SUITE 4200
CHICAGO, IL 60602
TEL: (312) 782-8150

USER NAME = USGP718052	DESIGNED - HA	REVISED - 1 01/30/2026	
	DRAWN - JFA	REVISED -	
PLOT SCALE = 100.000 ' / in.	CHECKED - SW	REVISED -	
PLOT DATE = 1/28/2026	DATE - 11/07/2025	REVISED -	

STATE OF ILLINOIS
DEPARTMENT OF TRANSPORTATION

SUGGESTED STAGES OF CONSTRUCTION AND TRAFFIC CONTROL
STAGE 6

SCALE: 1" = 50' | SHEET 3 OF 3 SHEETS | STA. TO STA.

F.A.I. RTE.	SECTION	COUNTY	TOTAL SHEETS	SHEET NO.
80	FAI 80 21 STRUCTURE 2	WILL	1230	232C
		CONTRACT NO. 62R23		
		ILLINOIS	FED. AID PROJECT	

THIS SHEET DELETED

MODEL: Default
FILE NAME: pw://transystems-pw.bentley.com:transyscorp-pw1-hosted/Documents/Projects_2018/CH401/401180022/03-WSP/CAD/62R23-RB-1/Sheets/CMD162R23-sht-EAST-MOTSlage2-tempave-01.dgn

USER NAME = tmmroz	DESIGNED - JAP	REVISED - 1 01/30/2026	STATE OF ILLINOIS DEPARTMENT OF TRANSPORTATION	SUGGESTED STAGES OF CONSTRUCTION AND TRAFFIC CONTROL TEMORARY PAVEMENT DETAIL – STAGE 2	F.A.I. RTE. 80 / SECTION FAI 80 21 STRUCTURE 2 / COUNTY WILL / TOTAL SHEETS 1230 / SHEET NO. 245
	DRAWN - TMM	REVISED -			CONTRACT NO. 62R23
PLOT SCALE = 60.000 ' / in.	CHECKED - JIR	REVISED -			
PLOT DATE = 1/28/2026	DATE - 11/7/2025	REVISED -		SCALE: 1" = 30' / SHEET 1 OF 10 SHEETS / STA. TO STA.	ILLINOIS FED. AID PROJECT

THIS SHEET DELETED

MODEL: Default
FILE NAME: pw://transystems-pw.bentley.com:transyscorp-pw1-hosted/Documents/Projects_2018/CH401/401180022/03-WSP/CAD/62R23-RB-1/Sheets/CMD162R23-sht-EAST-MOTStage2-tempave-02.dgn

USER NAME = tmmroz	DESIGNED - JAP	REVISED - 1 01/30/2026	STATE OF ILLINOIS DEPARTMENT OF TRANSPORTATION	SUGGESTED STAGES OF CONSTRUCTION AND TRAFFIC CONTROL TEMORARY PAVEMENT DETAIL – STAGE 2	F.A.I. RTE. 80 / SECTION FAI 80 21 STRUCTURE 2 / COUNTY WILL / TOTAL SHEETS 1230 / SHEET NO. 246
	DRAWN - TMM	REVISED -			CONTRACT NO. 62R23
PLOT SCALE = 60.000 ' / in.	CHECKED - JIR	REVISED -			
PLOT DATE = 1/28/2026	DATE - 11/7/2025	REVISED -		SCALE: 1" = 30' / SHEET 2 OF 10 SHEETS / STA. TO STA.	ILLINOIS / FED. AID PROJECT

THIS SHEET DELETED

MODEL: Default
FILE NAME: pw://transystems-pw.bentley.com:transyscorp-pw1-hosted/Documents/Projects_2018/CH401/401180022/03-WSP/CAD/62R23-RB-1/Sheets/CMD162R23-sht-EAST-MOTSlage3-tempave-01.dgn

USER NAME = tmmroz	DESIGNED - JAP	REVISED - 1 01/30/2026	STATE OF ILLINOIS DEPARTMENT OF TRANSPORTATION	SUGGESTED STAGES OF CONSTRUCTION AND TRAFFIC CONTROL TEMORARY PAVEMENT DETAIL – STAGE 3	F.A.I. RTE. 80 / SECTION FAI 80 21 STRUCTURE 2 / COUNTY WILL / TOTAL SHEETS 1230 / SHEET NO. 247
	DRAWN - TMM	REVISED -			CONTRACT NO. 62R23
PLOT SCALE = 60.000 ' / in.	CHECKED - JIR	REVISED -			
PLOT DATE = 1/28/2026	DATE - 11/7/2025	REVISED -		SCALE: 1" = 30' / SHEET 3 OF 10 SHEETS / STA. TO STA.	ILLINOIS / FED. AID PROJECT

THIS SHEET DELETED

MODEL: Default
FILE NAME: pw://transystems-pw.bentley.com:transyscorp-pw1-hosted/Documents/Projects_2018/CH401/401180022/03-WSP/CAD/62R23-RB-1/Sheets/CMD162R23-sht-EAST-MOTStage3-tempave-01a.dgn

USER NAME = tmmroz	DESIGNED - JAP	REVISED - 1 01/30/2026	STATE OF ILLINOIS DEPARTMENT OF TRANSPORTATION	SUGGESTED STAGES OF CONSTRUCTION AND TRAFFIC CONTROL TEMORARY PAVEMENT DETAIL – STAGE 3	F.A.I. RTE. 80 / SECTION FAI 80 21 STRUCTURE 2 / COUNTY WILL / TOTAL SHEETS 1230 / SHEET NO. 248
	DRAWN - TMM	REVISED -			CONTRACT NO. 62R23
PLOT SCALE = 60.000 ' / in.	CHECKED - JIR	REVISED -			
PLOT DATE = 1/28/2026	DATE - 11/7/2025	REVISED -		SCALE: 1" = 30' / SHEET 4 OF 10 SHEETS / STA. TO STA.	ILLINOIS FED. AID PROJECT

THIS SHEET DELETED

MODEL: Default
FILE NAME: pw://transystems-pw.bentley.com:transyscorp-pw1-hosted/Documents/Projects_2018/CH401/401180022/03-WSP/CAD/62R23-RB-1/Sheets/CMD162R23-sht-EAST-MOTStage3-tempave-02.dgn

USER NAME = tmmroz	DESIGNED - JAP	REVISED - 1 01/30/2026	STATE OF ILLINOIS DEPARTMENT OF TRANSPORTATION	SUGGESTED STAGES OF CONSTRUCTION AND TRAFFIC CONTROL TEMORARY PAVEMENT DETAIL – STAGE 3	F.A.I. RTE. 80 / SECTION FAI 80 21 STRUCTURE 2 / COUNTY WILL / TOTAL SHEETS 1230 / SHEET NO. 249
	DRAWN - TMM	REVISED -			CONTRACT NO. 62R23
PLOT SCALE = 60.000 ' / in.	CHECKED - JIR	REVISED -			
PLOT DATE = 1/28/2026	DATE - 11/7/2025	REVISED -		SCALE: 1" = 30' / SHEET 5 OF 10 SHEETS / STA. TO STA.	ILLINOIS / FED. AID PROJECT

THIS SHEET DELETED

MODEL: Default
FILE NAME: pw://transystems-pw.bentley.com:transyscorp-pw1-hosted/Documents/Projects_2018/CH401/401180022/03-WSP/CAD/62R23-RB-1/Sheets/CMD162R23-sht-EAST-MOTStage3-tempave-02a.dgn

USER NAME = tmmroz	DESIGNED - JAP	REVISED - 1 01/30/2026	STATE OF ILLINOIS DEPARTMENT OF TRANSPORTATION	SUGGESTED STAGES OF CONSTRUCTION AND TRAFFIC CONTROL TEMORARY PAVEMENT DETAIL – STAGE 3	F.A.I. RTE. 80 / SECTION FAI 80 21 STRUCTURE 2 / COUNTY WILL / TOTAL SHEETS 1230 / SHEET NO. 250
	DRAWN - TMM	REVISED -			CONTRACT NO. 62R23
PLOT SCALE = 60.000 ' / in.	CHECKED - JIR	REVISED -			
PLOT DATE = 1/28/2026	DATE - 11/7/2025	REVISED -		SCALE: 1" = 30' / SHEET 6 OF 10 SHEETS / STA. TO STA.	ILLINOIS / FED. AID PROJECT

THIS SHEET DELETED

MODEL: Default
FILE NAME: pw://transystems-pw.bentley.com:transyscorp-pw1-hosted/Documents/Projects_2018/CH401/401180022/03-WSP/CAD/62R23-Rb-1/Sheets/CM/D162R23-sht-EAST-MOTStage4A-temppave-01.dgn

USER NAME = tmmroz	DESIGNED - JAP	REVISED - 1 01/30/2026	STATE OF ILLINOIS DEPARTMENT OF TRANSPORTATION	SUGGESTED STAGES OF CONSTRUCTION AND TRAFFIC CONTROL TEMORARY PAVEMENT DETAIL – STAGE 4	
	DRAWN - TMM	REVISED -			
PLOT SCALE = 60.000 ' / in.	CHECKED - JIR	REVISED -			
PLOT DATE = 1/28/2026	DATE - 11/7/2025	REVISED -		SCALE: 1" = 30' SHEET 7 OF 10 SHEETS STA. TO STA.	

F.A.I. RTE.	SECTION	COUNTY	TOTAL SHEETS	SHEET NO.
80	FAI 80 21 STRUCTURE 2	WILL	1230	251
		CONTRACT NO. 62R23		
		ILLINOIS	FED. AID PROJECT	

THIS SHEET DELETED

MODEL: Default
FILE NAME: pw://transystems-pw.bentley.com:transyscorp-pw1-hosted/Documents/Projects_2018/CH401/401180022/03-WSP/CAD/62R23-Rb-1/Sheets/CM0162R23-sht-EAST-MOTStage4A-temppave-02.dgn

USER NAME = tmmroz	DESIGNED - JAP	REVISED - 1 01/30/2026	STATE OF ILLINOIS DEPARTMENT OF TRANSPORTATION	SUGGESTED STAGES OF CONSTRUCTION AND TRAFFIC CONTROL TEMORARY PAVEMENT DETAIL – STAGE 4	
	DRAWN - TMM	REVISED -			
PLOT SCALE = 60.000 ' / in.	CHECKED - JIR	REVISED -			
PLOT DATE = 1/28/2026	DATE - 11/7/2025	REVISED -		SCALE: 1" = 30' SHEET 8 OF 10 SHEETS STA. TO STA.	

F.A.I. RTE.	SECTION	COUNTY	TOTAL SHEETS	SHEET NO.
80	FAI 80 21 STRUCTURE 2	WILL	1230	252
		CONTRACT NO. 62R23		
		ILLINOIS	FED. AID PROJECT	

THIS SHEET DELETED

MODEL: Default
FILE NAME: pw://transystems-pw.bentley.com:transyscorp-pw1-hosted/Documents/Projects_2018/CH401/401180022/03-WSP/CAD/62R23-RB-1/Sheets/CM0162R23-sht-EAST-MOTStage5A-temppave-01.dgn

USER NAME = tmmroz	DESIGNED - JAP	REVISED - ⚠ 01/30/2026	STATE OF ILLINOIS DEPARTMENT OF TRANSPORTATION	SUGGESTED STAGES OF CONSTRUCTION AND TRAFFIC CONTROL TEMPORARY PAVEMENT DETAIL – STAGE 5	
	DRAWN - TMM	REVISED -			
PLOT SCALE = 60.000 ' / in.	CHECKED - JIR	REVISED -			
PLOT DATE = 1/28/2026	DATE - 11/7/2025	REVISED -		SCALE: 1" = 30' SHEET 9 OF 10 SHEETS STA. TO STA.	

F.A.I. RTE.	SECTION	COUNTY	TOTAL SHEETS	SHEET NO.
80	FAI 80 21 STRUCTURE 2	WILL	1230	253
		CONTRACT NO. 62R23		
		ILLINOIS	FED. AID PROJECT	

THIS SHEET DELETED

MODEL: Default
FILE NAME: pw://transystems-pw.bentley.com:transyscorp-pw1-hosted/Documents/Projects_2018/CH401/401180022/03-WSP/CAD/62R23-RB-1/Sheets/CKM0162R23-sht-EAST-MOTStage5A-temppave-02.dgn

USER NAME = tmmroz	DESIGNED - JAP	REVISED - 1 01/30/2026	STATE OF ILLINOIS DEPARTMENT OF TRANSPORTATION	SUGGESTED STAGES OF CONSTRUCTION AND TRAFFIC CONTROL TEMPORARY PAVEMENT DETAIL – STAGE 5	
	DRAWN - TMM	REVISED -			
PLOT SCALE = 60.000 ' / in.	CHECKED - JIR	REVISED -		SCALE: 1" = 30'	SHEET 10 OF 10 SHEETS STA. TO STA.
PLOT DATE = 1/28/2026	DATE - 11/7/2025	REVISED -			

F.A.I. RTE.	SECTION	COUNTY	TOTAL SHEETS	SHEET NO.
80	FAI 80 21 STRUCTURE 2	WILL	1230	254
		CONTRACT NO. 62R23		
		ILLINOIS	FED. AID PROJECT	

THIS SHEET DELETED

MODEL: Default
FILE NAME: D162R23-sht-detour-dgns01.dgn

Accurate GROUP, INC.	USER NAME = nmohammed	DESIGNED - AK	REVISED - 1 01/30/2026	STATE OF ILLINOIS DEPARTMENT OF TRANSPORTATION	DETOUR SIGN LEGEND – I			F.A.I. RTE.	SECTION	COUNTY	TOTAL SHEETS / SHEET NO.
		DRAWN - AK	REVISED -					80	FAI 80 21 STRUCTURE 2	WILL	1230 / 255
	PLOT SCALE = 120.0000 ' / in.	CHECKED - AB	REVISED -							CONTRACT NO. 62R23	
	PLOT DATE = 1/30/2026	DATE - 11/7/2025	REVISED -		SCALE: NONE	SHEET 1 OF 4 SHEETS	STA. TO STA.		ILLINOIS	FED. AID PROJECT	

THIS SHEET DELETED

MODEL: Default
FILE NAME: D162R23-sht-detour-dgns02.dgn

Accurate GROUP, INC.	USER NAME = nmohammed	DESIGNED - AK	REVISED - 1 01/30/2026	STATE OF ILLINOIS DEPARTMENT OF TRANSPORTATION	DETOUR SIGN LEGEND – II			F.A.I. RTE.	SECTION	COUNTY	TOTAL SHEETS	SHEET NO.
		DRAWN - AK	REVISED -					80	FAI 80 21 STRUCTURE 2	WILL	1230	256
	PLOT SCALE = 120.0000 ' / in.	CHECKED - AB	REVISED -							CONTRACT NO. 62R23		
	PLOT DATE = 1/30/2026	DATE - 11/7/2025	REVISED -		SCALE: NONE	SHEET 2 OF 4 SHEETS	STA. TO STA.		ILLINOIS	FED. AID PROJECT		

THIS SHEET DELETED

MODEL: NB Chicago to WB I-80
FILE NAME: D162R23-sht-detour-4lgns03.dgn

Accurate GROUP, INC.	USER NAME = nmohammed	DESIGNED - AK	REVISED - 1 01/30/2026	STATE OF ILLINOIS DEPARTMENT OF TRANSPORTATION	DETOUR SIGN LEGEND – III				F.A.I. RTE.	SECTION	COUNTY	TOTAL SHEETS	SHEET NO.
		DRAWN - AK	REVISED -						80	FAI 80 21 STRUCTURE 2	WILL	1230	257
	PLOT SCALE = 120.000 ' / in.	CHECKED - AB	REVISED -								CONTRACT NO. 62R23		
	PLOT DATE = 1/30/2026	DATE - 11/7/2025	REVISED -		SCALE: NONE	SHEET 3 OF 4 SHEETS	STA.	TO STA.		ILLINOIS	FED. AID PROJECT		

THIS SHEET DELETED

MODEL: EB-I-80 to Chicago St
FILE NAME: D162R23-sht-detourplan-01.dgn

Accurate GROUP, INC.	USER NAME = nmohammed	DESIGNED - AK	REVISED - 1 01/30/2026	STATE OF ILLINOIS DEPARTMENT OF TRANSPORTATION	DETOUR ROUTE: STAGE 3			F.A.I. RTE.	SECTION	COUNTY	TOTAL SHEETS	SHEET NO.
		DRAWN - AK	REVISED -					80	FAI 80 21 STRUCTURE 2	WILL	1230	259
	PLOT SCALE = 1800.000 ' / in.	CHECKED - AB	REVISED -							CONTRACT NO. 62R23		
	PLOT DATE = 1/30/2026	DATE - 11/7/2025	REVISED -		SCALE: NONE	SHEET 1 OF 5 SHEETS	STA. TO STA.			ILLINOIS	FED. AID PROJECT	

THIS SHEET DELETED

MODEL: EB-I-80 to Chicago St
FILE NAME: D162R23-sht-detour4in-02.dgn

Accurate GROUP, INC.	USER NAME = nmohammed	DESIGNED - AK	REVISED - 1 01/30/2026	STATE OF ILLINOIS DEPARTMENT OF TRANSPORTATION	DETOUR ROUTE: STAGE 4A				F.A.I. RTE.	SECTION	COUNTY	TOTAL SHEETS	SHEET NO.
		DRAWN - AK	REVISED -						80	FAI 80 21 STRUCTURE 2	WILL	1230	260
	PLOT SCALE = 1800.000 ' / in.	CHECKED - AB	REVISED -								CONTRACT NO. 62R23		
	PLOT DATE = 1/30/2026	DATE - 11/7/2025	REVISED -		SCALE: NONE	SHEET 2 OF 5 SHEETS	STA.	TO STA.		ILLINOIS	FED. AID PROJECT		

THIS SHEET DELETED

MODEL: EB-I-80 to Chicago St
FILE NAME: D162R23-sht-detourplan-03.dgn

Accurate GROUP, INC.	USER NAME = nmohammed	DESIGNED - AK	REVISED - 1 01/30/2026	STATE OF ILLINOIS DEPARTMENT OF TRANSPORTATION	DETOUR ROUTE: STAGE 4B			F.A.I. RTE.	SECTION	COUNTY	TOTAL SHEETS	SHEET NO.
		DRAWN - AK	REVISED -					80	FAI 80 21 STRUCTURE 2	WILL	1230	261
	PLOT SCALE = 1800.000 ' / in.	CHECKED - AB	REVISED -							CONTRACT NO. 62R23		
	PLOT DATE = 1/30/2026	DATE - 11/7/2025	REVISED -		SCALE: NONE	SHEET 3 OF 5 SHEETS	STA. TO STA.		ILLINOIS	FED. AID PROJECT		

THIS SHEET DELETED

MODEL: EB-I-80 to Chicago St
FILE NAME: D162R23-sht-detourplan-04.dgn

Accurate GROUP, INC.	USER NAME = nmohammed	DESIGNED - AK	REVISED - 1 01/30/2026	STATE OF ILLINOIS DEPARTMENT OF TRANSPORTATION	DETOUR ROUTE: STAGE 5A			F.A.I. RTE.	SECTION	COUNTY	TOTAL SHEETS	SHEET NO.
		DRAWN - AK	REVISED -					80	FAI 80 21 STRUCTURE 2	WILL	1230	262
	PLOT SCALE = 1800.000 ' / in.	CHECKED - AB	REVISED -							CONTRACT NO. 62R23		
	PLOT DATE = 1/30/2026	DATE - 11/7/2025	REVISED -		SCALE: NONE	SHEET 4 OF 5 SHEETS	STA. TO STA.			ILLINOIS FED. AID PROJECT		

THIS SHEET DELETED

MODEL: Default
FILE NAME: pw://transystems-pw.bentley.com:transyscorp-pw1-hosted/Documents/Projects_2018/CH401/401180022/03-WSP/CAD/62R23-RB-1/Sheets/Civil/D162R23-eh-erosstaging-schedules.dgn

WSP USA Inc.
30 N. LASALLE STREET
SUITE 4200
CHICAGO, IL 60602
TEL: (312) 782-8150

USER NAME = USHC706648	DESIGNED - DB	REVISED - 1 01/30/2026	STATE OF ILLINOIS DEPARTMENT OF TRANSPORTATION
	DRAWN - XL	REVISED -	
PLOT SCALE = 100.000 ' / in.	CHECKED - KS	REVISED -	
PLOT DATE = 1/29/2026	DATE - 11/07/2025	REVISED -	

EROSION AND SEDIMENT CONTROL PLAN
SCHEDULES

SCALE: | SHEET 1 OF 2 SHEETS | STA. TO STA.

F.A.I. RTE.	SECTION	COUNTY	TOTAL SHEETS	SHEET NO.
80	FAI 80 21 STRUCTURE 2	WILL	1230	281
		CONTRACT NO. 62R23		
	ILLINOIS	FED. AID PROJECT		

EROSION AND SEDIMENT CONTROL SCHEDULES

						PERIMETER EROSION BARRIER	TEMPORARY EROSION CONTROL SEEDING	TEMPORARY EROSION CONTROL BLANKET	MULCH, METHOD 2	INLET FILTERS	TEMPORARY DITCH CHECKS	TEMPORARY CHAIN LINK FENCE WITH SCREENING, 8'	AGGREGATE (EROSION CONTRAL)
STAGE	ALIGNMENT	FROM STATION	DIR	TO STATION	DIR	FOOT	POUND	SQ YD	ACRE	EACH	FOOT	FOOT	TONS
STAGE 2	I-80	37+27	RT	39+64	LT	789	-	-	-	-	-	-	-
STAGE 2	I-80	37+27	RT	39+64	LT	-	83.65	4049	-	-	-	-	-
STAGE 2	I-80	40+54	RT	42+30	CTR	677	60.55	-	0.606	-	-	-	-
STAGE 2	I-80	50+55	RT	59+29	RT	2025	295.1	-	2.951	-	-	-	-
STAGE 2	I-80	51+37	LT	67+18	LT	-	-	-	-	-	-	1817	-
STAGE 2	I-80	53+50	RT	68+50	RT	-	-	-	-	-	-	2119	-
STAGE 2	I-80	58+58	LT	60+40	LT	416	87.31	4226	-	-	-	-	-
STAGE 2	I-80	59+29	RT	60+40	RT	231	-	-	-	-	-	-	-
STAGE 4	I-80 (DRB)	38+40	LT	44+05	LT	-	-	-	-	30	-	-	-
STAGE 4	I-80 (DRB)	45+93	LT	60+13	LT	-	-	-	-	18	-	-	-
STAGE 5	I-80 (DRB)	38+01	RT	42+91	RT	-	-	-	-	18	-	-	-
STAGE 5	I-80 (DRB)	45+90	RT	59+60	RT	-	-	-	-	17	-	-	-
PVMT. REMOVAL	RIVER ST., DUNCAN ST KIEP ST., LUCAS ST.	-	-	-	-	3864	124.02	-	1.24	10	-	-	-
PVMT. REMOVAL	WATER ST. - SHEET 1	-	-	-	-	966	13.54	-	0.135	2	-	-	-
PVMT. REMOVAL	WATER ST. - SHEET 2	-	-	-	-	-	-	-	-	4	-	-	-
PVMT. REMOVAL	DES PLAINES ST.	-	-	-	-	579	18.68	-	0.187	-	-	-	
PVMT. REMOVAL	JOLIET ST. - S	-	-	-	-	470	13.43	-	0.134	-	-	-	-
PVMT. REMOVAL	JOLIET ST. - N	-	-	-	-	335	7.84	-	0.078	-	-	-	27
LOCAL ROADS	RIVER ST. TO WATER ST.	-	-	-	-	0	530.56	-	5.306	-	-	-	27
LOCAL ROADS	RIVER ST. SHEET-1	-	-	-	-	735	15.59	363	0.144	3	59	-	-
LOCAL ROADS	RIVER ST. SHEET-2	-	-	-	-	1395	34.85	1905	0.26	8	108	-	-
LOCAL ROADS	JOLIET ST. SHEET-1	-	-	-	-	162	3.38	-	0.034	-	-	-	-
LOCAL ROADS	JOLIET ST SHEET-2	-	-	-	-	129	3.01	-	0.03	-	-	-	-
LOCAL ROADS	CHERRY. ST	-	-	-	-	437	7.7	-	0.081	-	-	-	
LOCAL ROADS	US-6 SHEET-1	-	-	-	-	434	3.34	162	-	2	64	-	-
LOCAL ROADS	US-6 SHEET-2	-	-	-	-	1186	6.42	311	-	4	128	-	-
LOCAL ROADS	US-6 SHEET-3	-	-	-	-	373	11.65	168	-	-	-	-	-
LOCAL ROADS	US-6 SHEET-4	-	-	-	-	325	8.36	96	-	-	-	-	-
LOCAL ROADS	WATER ST. SHEET-1	-	-	-	-	846	22.66	-	0.227	2	-	-	-
LOCAL ROADS	WATER ST. SHEET-2	-	-	-	-	414	11.78	-	0.118	2	-	-	-
LOCAL ROADS	LUCAS ST.	-	-	-	-	366	18.19	-	0.309	5	-	-	-
TOTAL						17154	1381.61	11280	11.84	125	359	3936	54

EROSION CONTROL LEGEND

- INLET FILTER
- TEMPORARY DITCH CHECK
- PERIMETER EROSION BARRIER
- TEMPORARY CHAIN LINK FENCE WITH SCREENING, 8'
- INLET PROTECTION (UTILIZING TEMP DITCH CHECKS)
- TD-P3.1 TEMPORARY DRAINAGE PIPE (REFER TO TEMP. DRAIN. SCHEDULES)
- TD-S3.1 TEMPORARY DRAINAGE STRUCTURE (REFER TO TEMP. DRAIN.SCHEDULES)
- AGGREGATE (EROSION CONTROL) FILTER FABRIC
- EROSION CONTROL DEVICES INSTALLED IN PREVIOUS STAGE
- WORK ZONE
- PAVEMENT CONSTRUCTED IN PREVIOUS STAGE
- TEMPORARY PAVEMENT (PREVIOUSLY CONSTRUCTED)
- TEMPORARY PAVEMENT (ACTIVELY CONSTRUCTING)
- TEMPORARY EROSION CONTROL SEEDING MULCH, METHOD 2
- TEMPORARY EROSION CONTROL SEEDING TEMPORARY EROSION CONTROL BLANKET
- RIPRAP (SEE DRAINAGE PLANS FOR DETAILS)
- TEMP BLANKET AND SEEDING INSTALLED IN PREVIOUS STAGE
- DIRECTION OF TRAFFIC

CHERRY STREET
CSX RAILROAD
US 6/ RAILROAD ST.
DES PLAINES RIVER
PR ROW
END CONTRACT 62R22
BEGIN CONTRACT 62R23
BEGIN PROJECT STA. 37+89.00
MATCHLINE STA. 37+00.00
MATCHLINE STA. 51+00.00
PR PERM EASEMENT
EXISTING FLOODWALL
SEE TEMPORARY CAUSEWAY DETAIL SHEET FOR CAUSEWAY DETAILS
PR ℄ I-80
EX ROW & A/C
PERIMETER EROSION BARRIER (TYP.)
EXIST WB I-80
EXIST EB I-80
EX DOLPHIN (TYP.)
EX BRIDGE
N

KEY PLAN

0 50 100 150
SCALE IN FEET

MODEL: Default
FILE NAME: pw://transystems-pw.bentley.com:transyscorp-pw1-hosted/Documents/Projects_2018/CH401/401180022/03-WSP/CAD/62R23-RB-1/Sheets/Civil/D162R23-sht-erosstaging2-2

WSP USA Inc.
30 N. LASALLE STREET
SUITE 4200
CHICAGO, IL 60602
TEL: (312) 782-8150

USER NAME = USHC706648	DESIGNED - DB	REVISED -	01/30/2026
	DRAWN - XL	REVISED -	
PLOT SCALE = 100.000 ' / in.	CHECKED - KS	REVISED -	
PLOT DATE = 1/29/2026	DATE - 11/07/2025	REVISED -	

STATE OF ILLINOIS
DEPARTMENT OF TRANSPORTATION

EROSION CONTROL PLAN
STAGE 2

SCALE: 1" = 50' | SHEET 2 OF 5 SHEETS | STA. | TO STA.

F.A.I. RTE.	SECTION	COUNTY	TOTAL SHEETS	SHEET NO.
80	FAI 80 21 STRUCTURE 2	WILL	1230	290
		CONTRACT NO. 62R23		
		ILLINOIS	FED. AID PROJECT	

EROSION CONTROL LEGEND

- INLET FILTER
- TEMPORARY DITCH CHECK
- PERIMETER EROSION BARRIER
- INLET PROTECTION (UTILIZING TEMP DITCH CHECKS)
- AGGREGATE (EROSION CONTROL) FILTER FABRIC
- TD-P3.1 TEMPORARY DRAINAGE PIPE (REFER TO TEMP. DRAIN. SCHEDULES)
- TEMPORARY EROSION CONTROL SEEDING MULCH, METHOD 2
- TEMPORARY EROSION CONTROL SEEDING TEMPORARY EROSION CONTROL BLANKET
- TEMP BLANKET AND SEEDING INSTALLED IN PREVIOUS STAGE
- EROSION CONTROL DEVICES INSTALLED IN PREVIOUS STAGE
- TEMPORARY CHAIN LINK FENCE WITH SCREENING, 8'
- TD-S3.1 TEMPORARY DRAINAGE STRUCTURE (REFER TO TEMP. DRAIN.SCHEDULES)
- DIRECTION OF TRAFFIC
- RIPRAP (SEE DRAINAGE PLANS FOR DETAILS)
- WORK ZONE
- PAVEMENT CONSTRUCTED IN PREVIOUS STAGE
- TEMPORARY PAVEMENT (PREVIOUSLY CONSTRUCTED)
- TEMPORARY PAVEMENT (ACTIVELY CONSTRUCTING)

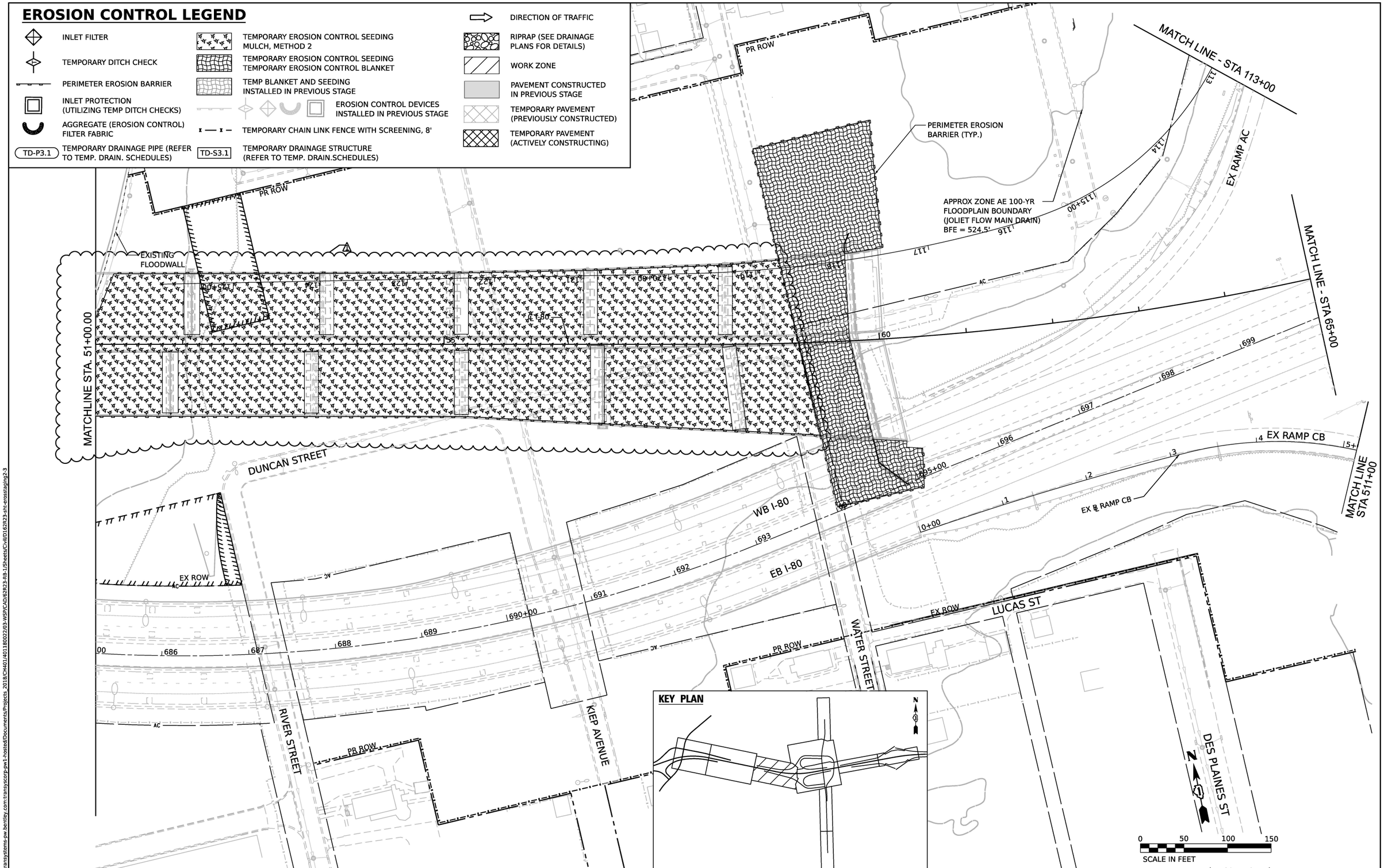

WSP USA Inc. 30 N. LASALLE STREET SUITE 4200 CHICAGO, IL 60602 TEL: (312) 782-8150	USER NAME = USHC706648	DESIGNED - DB	REVISED - 1 01/30/2026	STATE OF ILLINOIS DEPARTMENT OF TRANSPORTATION
		DRAWN - XL	REVISED -	
	PLOT SCALE = 100.000 ' / in.	CHECKED - KS	REVISED -	
	PLOT DATE = 1/29/2026	DATE - 11/07/2025	REVISED -	

EROSION CONTROL PLAN
STAGE 2

SCALE: 1" = 50' | SHEET 3 OF 5 SHEETS | STA. | TO STA.

F.A.I. RTE.	SECTION	COUNTY	TOTAL SHEETS	SHEET NO.
80	FAI 80 21 STRUCTURE 2	WILL	1230	291
		CONTRACT NO. 62R23		
		ILLINOIS	FED. AID PROJECT	

MODEL: Default
FILE NAME: pw://transystems-pw.bentley.com:transyscorp-pw1-hosted/Documents/Projects_2018/CH401/401180022/03-WSP/CAD/62R23-RB-1/Sheets/Cull/D162R23-sht-erosstaging2-3

THIS SHEET DELETED

MODEL: Default
FILE NAME: pw://transystems-pw.bentley.com:transyscorp-pw1-hosted/Documents/Projects_2018/CH401/401180022/03-WSP/CAD/62R23-RB-1/Sheets/Civil/D162R23-sht-erosstaging2-4

WSP USA Inc.
30 N. LASALLE STREET
SUITE 4200
CHICAGO, IL 60602
TEL: (312) 782-8150

USER NAME = USHC706648	DESIGNED - DB	REVISED - 1 01/30/2026	
	DRAWN - XL	REVISED -	
PLOT SCALE = 100.000 ' / in.	CHECKED - KS	REVISED -	
PLOT DATE = 1/29/2026	DATE - 11/07/2025	REVISED -	

STATE OF ILLINOIS
DEPARTMENT OF TRANSPORTATION

EROSION CONTROL PLAN
STAGE 2

SCALE: | SHEET 4 OF 5 SHEETS | STA. | TO STA.

F.A.I. RTE.	SECTION	COUNTY	TOTAL SHEETS	SHEET NO.
80	FAI 80 21 STRUCTURE 2	WILL	1230	292

CONTRACT NO. 62R23

ILLINOIS | FED. AID PROJECT

THIS SHEET DELETED

MODEL: Default
FILE NAME: pw://transystems-pw.bentley.com:transyscorp-pw1-hosted/Documents/Projects_2018/CH401/401180022/03-WSP/CAD/62R23-RB-1/Sheets/Civil/D162R23-sht-erosstaging2-5

WSP USA Inc.
30 N. LASALLE STREET
SUITE 4200
CHICAGO, IL 60602
TEL: (312) 782-8150

USER NAME = USHC706648	DESIGNED - DB	REVISED -	01/30/2026
	DRAWN - XL	REVISED -	
PLOT SCALE = 100.000 ' / in.	CHECKED - KS	REVISED -	
PLOT DATE = 1/29/2026	DATE - 11/07/2025	REVISED -	

STATE OF ILLINOIS
DEPARTMENT OF TRANSPORTATION

EROSION CONTROL PLAN
STAGE 2

SCALE: 1" = 50' | SHEET 5 OF 5 SHEETS | STA. | TO STA.

F.A.I. RTE.	SECTION	COUNTY	TOTAL SHEETS	SHEET NO.
80	FAI 80 21 STRUCTURE 2	WILL	1230	293

CONTRACT NO. 62R23

ILLINOIS | FED. AID PROJECT

EROSION CONTROL LEGEND

- INLET FILTER
- TEMPORARY DITCH CHECK
- PERIMETER EROSION BARRIER
- TEMPORARY CHAIN LINK FENCE WITH SCREENING, 8'
- INLET PROTECTION (UTILIZING TEMP DITCH CHECKS)
- TD-P3.1 TEMPORARY DRAINAGE PIPE (REFER TO TEMP. DRAIN. SCHEDULES)
- TD-S3.1 TEMPORARY DRAINAGE STRUCTURE (REFER TO TEMP. DRAIN.SCHEDULES)
- AGGREGATE (EROSION CONTROL) FILTER FABRIC
- EROSION CONTROL DEVICES INSTALLED IN PREVIOUS STAGE
- WORK ZONE
- PAVEMENT CONSTRUCTED IN PREVIOUS STAGE
- TEMPORARY PAVEMENT (PREVIOUSLY CONSTRUCTED)
- TEMPORARY PAVEMENT (ACTIVELY CONSTRUCTING)
- TEMPORARY EROSION CONTROL SEEDING MULCH, METHOD 2
- TEMPORARY EROSION CONTROL SEEDING TEMPORARY EROSION CONTROL BLANKET
- RIPRAP (SEE DRAINAGE PLANS FOR DETAILS)
- TEMP BLANKET AND SEEDING INSTALLED IN PREVIOUS STAGE
- DIRECTION OF TRAFFIC

CHERRY STREET
CSX RAILROAD
US 6/ RAILROAD ST.
DES PLAINES RIVER
N
PR ROW
END CONTRACT 62R22
BEGIN CONTRACT 62R23
EXISTING FLOODWALL
MAINTAIN PERIMETER EROSION BARRIER FROM PREVIOUS STAGE
COFFERCELLS (TYP.)
SEE TEMPORARY CAUSEWAY DETAIL SHEET FOR CAUSEWAY DETAILS
SEE TEMPORARY CAUSEWAY DETAIL SHEET FOR CAUSEWAY DETAILS
BEGIN PROJECT STA. 37+89.00
MATCHLINE STA. 37+00.00
MATCHLINE STA. 51+00.00
PR PERM EASEMENT
PR PERM EASEMENT
℄ I-80
℄ I-80
40
45
50
0+0
EX ROW & A/C
EXIST WB I-80
EXIST EB I-80
EX ROW & A/C
PERIMETER EROSION BARRIER (TYP.)
685
EX DOLPHIN (TYP.)
EX BRIDGE
EX ℄ I-80
APPROX ZONE AE 100-YR FLOODPLAIN BOUNDARY (JOLIET FLOW MAIN DRAIN) BFE = 524.5'
0 50 100 150
SCALE IN FEET

KEY PLAN

N

MODEL: Default
FILE NAME: pw://transystems-pw.bentley.com:transyscorp-pw1-hosted/Documents/Projects_2018/CH401/401180022/03-WSP/CAD/62R23-RB-1/Sheets/Civil/D162R23-sht-erosstaging3-2

WSP USA Inc.
30 N. LASALLE STREET
SUITE 4200
CHICAGO, IL 60602
TEL: (312) 782-8150

USER NAME = USHC706648	DESIGNED - DB	REVISED -	01/30/2026
	DRAWN - XL	REVISED -	
PLOT SCALE = 100.000 ' / in.	CHECKED - KS	REVISED -	
PLOT DATE = 1/29/2026	DATE - 11/07/2025	REVISED -	

STATE OF ILLINOIS
DEPARTMENT OF TRANSPORTATION

EROSION CONTROL PLAN
STAGE 3

SCALE: 1" = 50' | SHEET 2 OF 5 SHEETS | STA. TO STA.

F.A.I. RTE.	SECTION	COUNTY	TOTAL SHEETS	SHEET NO.
80	FAI 80 21 STRUCTURE 2	WILL	1230	295
		CONTRACT NO. 62R23		
		ILLINOIS	FED. AID PROJECT	

EROSION CONTROL LEGEND

- INLET FILTER
- TEMPORARY DITCH CHECK
- PERIMETER EROSION BARRIER
- INLET PROTECTION (UTILIZING TEMP DITCH CHECKS)
- AGGREGATE (EROSION CONTROL) FILTER FABRIC
- TD-P3.1 TEMPORARY DRAINAGE PIPE (REFER TO TEMP. DRAIN. SCHEDULES)
- TEMPORARY EROSION CONTROL SEEDING MULCH, METHOD 2
- TEMPORARY EROSION CONTROL SEEDING TEMPORARY EROSION CONTROL BLANKET
- TEMP BLANKET AND SEEDING INSTALLED IN PREVIOUS STAGE
- EROSION CONTROL DEVICES INSTALLED IN PREVIOUS STAGE
- TEMPORARY CHAIN LINK FENCE WITH SCREENING, 8'
- TD-S3.1 TEMPORARY DRAINAGE STRUCTURE (REFER TO TEMP. DRAIN.SCHEDULES)
- DIRECTION OF TRAFFIC
- RIPRAP (SEE DRAINAGE PLANS FOR DETAILS)
- WORK ZONE
- PAVEMENT CONSTRUCTED IN PREVIOUS STAGE
- TEMPORARY PAVEMENT (PREVIOUSLY CONSTRUCTED)
- TEMPORARY PAVEMENT (ACTIVELY CONSTRUCTING)

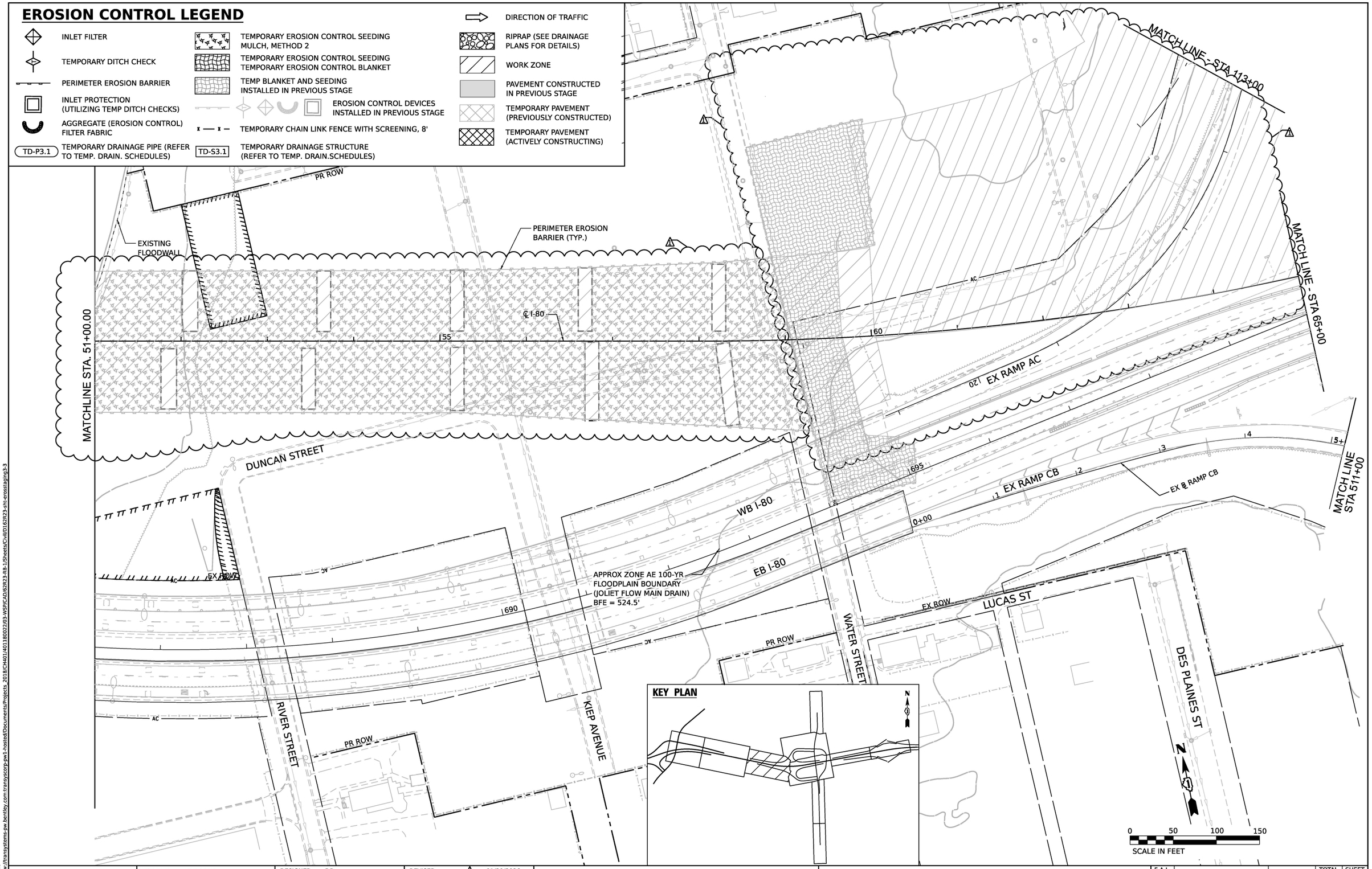

MODEL: Default
FILE NAME: pw://transystems-pw.bentley.com:transyscorp-pw1-hosted/Documents/Projects_2018/CH401/401180022/03-WSP/CAD/62R23-RB-1/Sheets/Civil/D162R23-sht-erosstaging3.3

WSP USA Inc.
30 N. LASALLE STREET
SUITE 4200
CHICAGO, IL 60602
TEL: (312) 782-8150

USER NAME = USHC706648	DESIGNED - DB	REVISED -	01/30/2026
	DRAWN - XL	REVISED -	
PLOT SCALE = 100.000 ' / in.	CHECKED - KS	REVISED -	
PLOT DATE = 1/29/2026	DATE - 11/07/2025	REVISED -	

STATE OF ILLINOIS
DEPARTMENT OF TRANSPORTATION

EROSION CONTROL PLAN
STAGE 3

SCALE: 1" = 50' | SHEET 3 OF 5 SHEETS | STA. | TO STA.

F.A.I. RTE.	SECTION	COUNTY	TOTAL SHEETS	SHEET NO.
80	FAI 80 21 STRUCTURE 2	WILL	1230	296
		CONTRACT NO. 62R23		
		ILLINOIS	FED. AID PROJECT	

THIS SHEET DELETED

MODEL: Default
FILE NAME: pw://transystems-pw.bentley.com:transyscorp-pw1-hosted/Documents/Projects_2018/CH401/401180022/03-WSP/CAD/62R23-RB-1/Sheets/Civil/D162R23-sht-erosstaging3-4

WSP USA Inc.
30 N. LASALLE STREET
SUITE 4200
CHICAGO, IL 60602
TEL: (312) 782-8150

USER NAME = USHC706648	DESIGNED - DB	REVISED - 1 01/30/2026	
	DRAWN - XL	REVISED -	
PLOT SCALE = 100.000 ' / in.	CHECKED - KS	REVISED -	
PLOT DATE = 1/29/2026	DATE - 11/07/2025	REVISED -	

STATE OF ILLINOIS
DEPARTMENT OF TRANSPORTATION

EROSION CONTROL PLAN
STAGE 3

SCALE: | SHEET 4 OF 5 SHEETS | STA. | TO STA.

F.A.I. RTE.	SECTION	COUNTY	TOTAL SHEETS	SHEET NO.
80	FAI 80 21 STRUCTURE 2	WILL	1230	297

CONTRACT NO. 62R23

ILLINOIS | FED. AID PROJECT

THIS SHEET DELETED

MODEL: Default
FILE NAME: pw://transystems-pw.bentley.com:transyscorp-pw1-hosted/Documents/Projects_2018/CH401/401180022/03-WSP/CAD/62R23-RB-1/Sheets/Civil/D162R23-sht-erosstaging3-5

WSP USA Inc.
30 N. LASALLE STREET
SUITE 4200
CHICAGO, IL 60602
TEL: (312) 782-8150

USER NAME = USHC706648	DESIGNED - DB	REVISED - 1 01/30/2026	
	DRAWN - XL	REVISED -	
PLOT SCALE = 100.000 ' / in.	CHECKED - KS	REVISED -	
PLOT DATE = 1/29/2026	DATE - 11/07/2025	REVISED -	

STATE OF ILLINOIS
DEPARTMENT OF TRANSPORTATION

EROSION CONTROL PLAN
STAGE 3

SCALE: 1" = 50' | SHEET 5 OF 5 SHEETS | STA. | TO STA.

F.A.I. RTE.	SECTION	COUNTY	TOTAL SHEETS	SHEET NO.
80	FAI 80 21 STRUCTURE 2	WILL	1230	298

CONTRACT NO. 62R23

ILLINOIS | FED. AID PROJECT