MA025

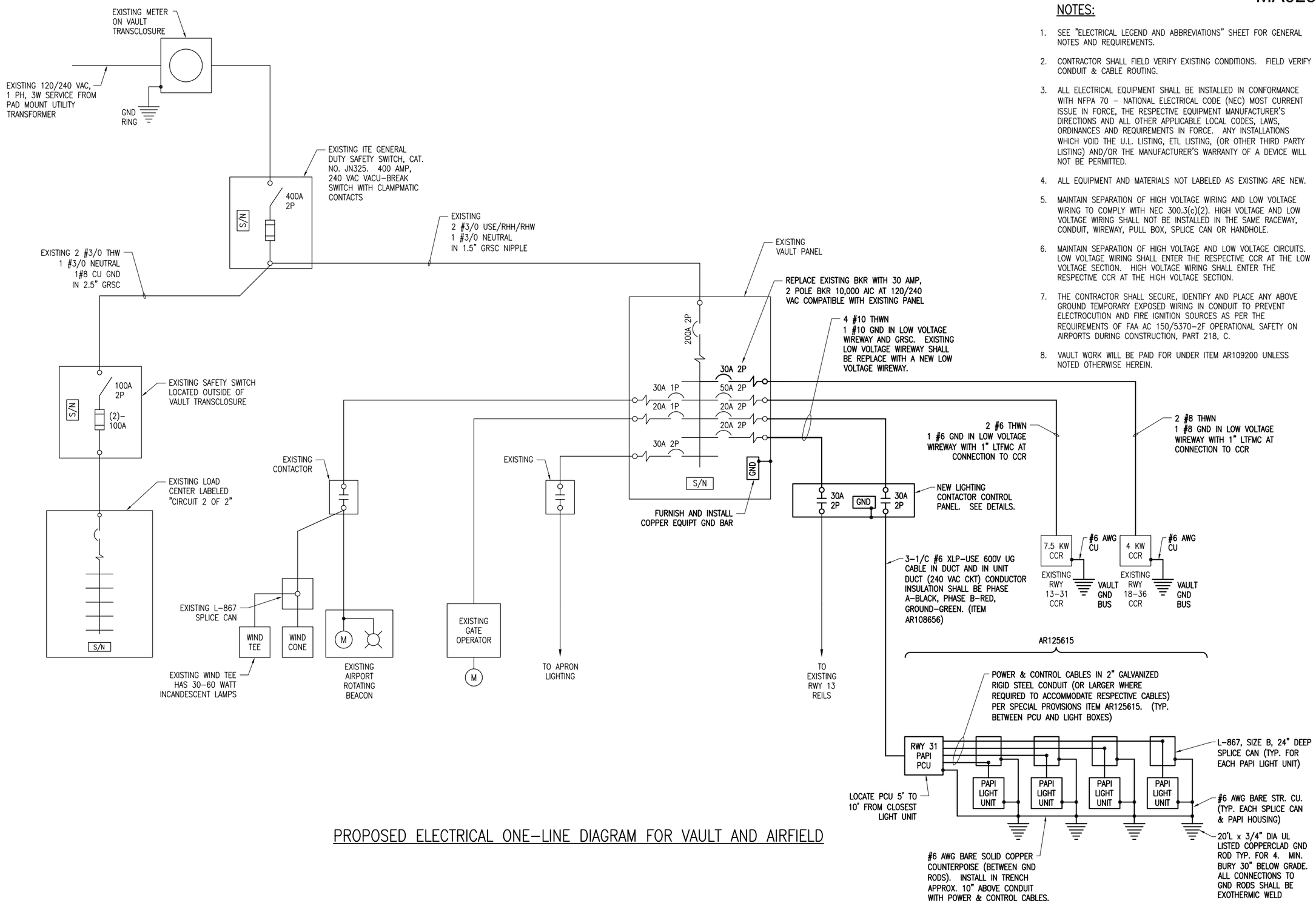

PROPOSED ELECTRICAL ONE-LINE DIAGRAM FOR VAULT AND AIRFIELD

NOTES:

1. SEE "ELECTRICAL LEGEND AND ABBREVIATIONS" SHEET FOR GENERAL NOTES AND REQUIREMENTS.
2. CONTRACTOR SHALL FIELD VERIFY EXISTING CONDITIONS. FIELD VERIFY CONDUIT & CABLE ROUTING.
3. ALL ELECTRICAL EQUIPMENT SHALL BE INSTALLED IN CONFORMANCE WITH NFPA 70 – NATIONAL ELECTRICAL CODE (NEC) MOST CURRENT ISSUE IN FORCE, THE RESPECTIVE EQUIPMENT MANUFACTURER'S DIRECTIONS AND ALL OTHER APPLICABLE LOCAL CODES, LAWS, ORDINANCES AND REQUIREMENTS IN FORCE. ANY INSTALLATIONS WHICH VOID THE U.L. LISTING, ETL LISTING, (OR OTHER THIRD PARTY LISTING) AND/OR THE MANUFACTURER'S WARRANTY OF A DEVICE WILL NOT BE PERMITTED.
4. ALL EQUIPMENT AND MATERIALS NOT LABELED AS EXISTING ARE NEW.
5. MAINTAIN SEPARATION OF HIGH VOLTAGE WIRING AND LOW VOLTAGE WIRING TO COMPLY WITH NEC 300.3(c)(2). HIGH VOLTAGE AND LOW VOLTAGE WIRING SHALL NOT BE INSTALLED IN THE SAME RACEWAY, CONDUIT, WIREWAY, PULL BOX, SPLICE CAN OR HANDHOLE.
6. MAINTAIN SEPARATION OF HIGH VOLTAGE AND LOW VOLTAGE CIRCUITS. LOW VOLTAGE WIRING SHALL ENTER THE RESPECTIVE CCR AT THE LOW VOLTAGE SECTION. HIGH VOLTAGE WIRING SHALL ENTER THE RESPECTIVE CCR AT THE HIGH VOLTAGE SECTION.
7. THE CONTRACTOR SHALL SECURE, IDENTIFY AND PLACE ANY ABOVE GROUND TEMPORARY EXPOSED WIRING IN CONDUIT TO PREVENT ELECTROCUTION AND FIRE IGNITION SOURCES AS PER THE REQUIREMENTS OF FAA AC 150/5370-2F OPERATIONAL SAFETY ON AIRPORTS DURING CONSTRUCTION, PART 218, C.
8. VAULT WORK WILL BE PAID FOR UNDER ITEM AR109200 UNLESS NOTED OTHERWISE HEREIN.

DATE	REVISION
12/11/12	UPDATED NOTE 7 & EXISTING CKTS

MARSHALL COUNTY AIRPORT
LACON, ILLINOIS

IL PROJ.: C75-4223 BLOCK GRANT PROJ.: 3-17-0059-B15

Hanson Proj. No. 10A0051
Filename E-602.DWG
Scale NONE
Date 12/14/12

LAYOUT	KNL	08/26/10
DRAWN	MLH	09/02/10
REVIEWED	KNL/CAH	03/30/11

HANSON

© Copyright Hanson Professional Services Inc. 2013
Hanson Professional Services Inc.
1525 South Sixth Street
Springfield, Illinois 62703-2886
Ph: (217) 788-2450 Fax: (217) 788-2503
www.hanson-inc.com
Offices Nationwide

PAVE, LIGHT AND MARK 805' EXTENSION

PROPOSED ELECTRICAL ONE-LINE FOR VAULT AND AIRFIELD

JAN 10, 2013 3:53 PM KINCA00394
I:\AIRPORTS\MARSHALL\10A0051\AIRPORT\SHEETS\E-602.DWG