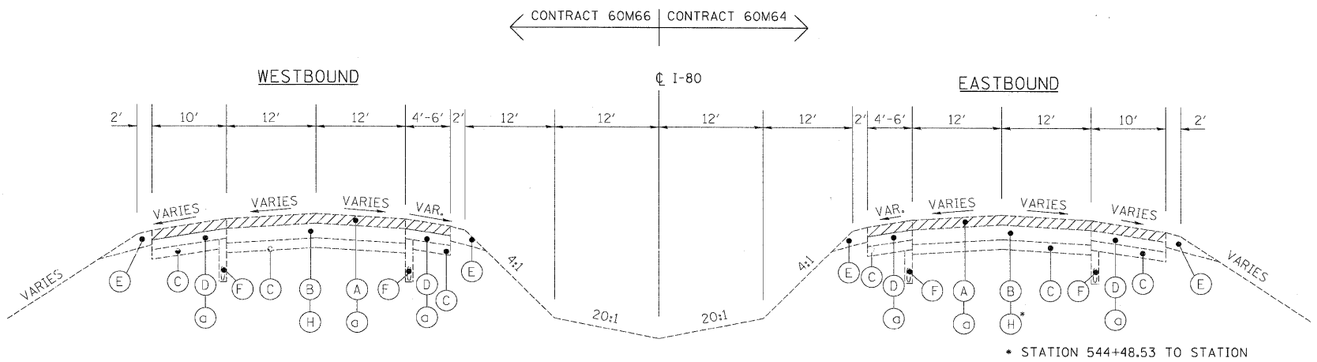

EXISTING TYPICAL SECTION

STA. 544+47.10 TO STA. 607+00 (WB)
STA. 544+48.53 TO STA. 607+00 (EB)
BRIDGE OMISSION
STA. 544+69.10 TO STA. 546+05.97 (WB)
STA. 544+68.63 TO STA. 546+04.22 (EB)
STA. 585+22.59 TO STA. 586+49.36 (WB)
STA. 584+94.76 TO STA. 586+24.09 (EB)
STA. 589+59.88 TO STA. 590+62.47 (WB)
STA. 589+89.84 TO STA. 591+07.82 (EB)
STA. 601+50.76 TO STA. 607+00 (WB)
STA. 601+37.85 TO STA. 607+00 (EB)

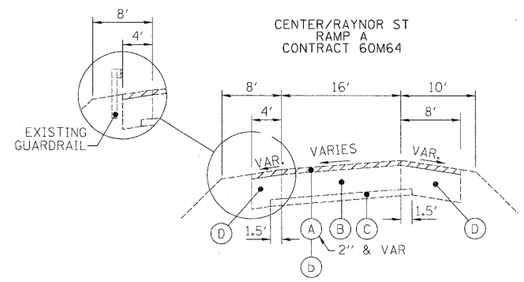

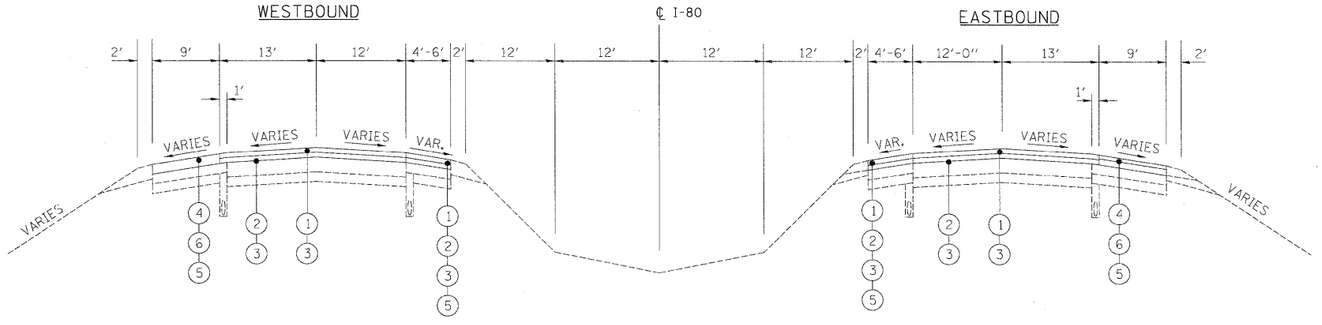

PROPOSED TYPICAL SECTION

STA. 544+47.10 TO STA. 607+00 (WB)
STA. 544+48.53 TO STA. 607+00 (EB)
BRIDGE OMISSION
STA. 544+69.10 TO STA. 546+05.97 (WB)
STA. 544+68.63 TO STA. 546+04.22 (EB)
STA. 585+22.59 TO STA. 586+49.36 (WB)
STA. 584+94.76 TO STA. 586+24.09 (EB)
STA. 589+59.88 TO STA. 590+62.47 (WB)
STA. 589+89.84 TO STA. 591+07.82 (EB)
STA. 601+50.76 TO STA. 607+00 (WB)
STA. 601+37.85 TO STA. 607+00 (EB)

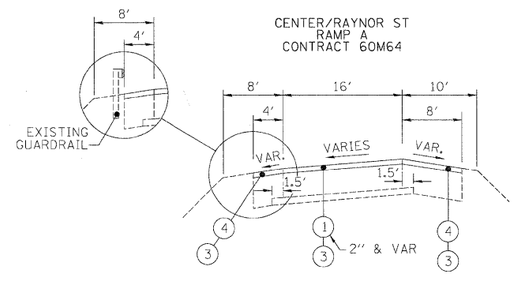

EXISTING LEGEND

- (A) SMA OVERLAY, 4″±
- (B) P.C.C. PAVEMENT, 10″±
- (C) SUB-BASE GRANULAR MATERIAL
- (D) HMA SHOULDER, 8″±
- (E) AGGREGATE SHOULDER
- (F) PIPE UNDERDRAIN
- (G) HOT MIX ASPHALT STABILIZATION (AT GUARDRAIL LOCATIONS)
- (H) C.R.C PAVEMENT, 9″±

REMOVAL LEGEND

- (a) HOT-MIX ASPHALT REMOVAL, 4″
- (b) HOT-MIX ASPHALT REMOVAL, 2″

PROPOSED LEGEND

- (1) POLYMERIZED HOT-MIX ASPHALT SURFACE COURSE STONE MATRIX ASPHALT, N80, 2″
- (2) POLYMERIZED HOT-MIX ASPHALT BINDER COURSE STONE MATRIX ASPHALT, N80, 2″
- (3) BITUMINOUS MATERIALS (PRIME COAT)
- (4) HOT-MIX ASPHALT SURFACE COURSE, MIX "D", N70, (IL 9.5mm), 1 1/2″
- (5) SHOULDER RUMBLE STRIP
- (6) HOT-MIX ASPHALT BINDER COURSE, IL-19.0, N70, 2 1/2″

NOTES

1. ALL PAVEMENT PATCHING SHALL BE PLACED AT LOCATIONS AS APPROVED BY THE ENGINEER. THE DEPTH OF THE PATCH SHALL BE EQUAL TO THE THICKNESS OF EXISTING PCC PAVEMENT AND SHALL NOT INCLUDE THE DEPTH OF THE HOT-MIX ASPHALT REMOVAL, 4″.
2. THE CONTRACTOR SHALL MAINTAIN THE EXISTING CROSS SLOPES.
3. PAVEMENT UNDERDRAIN IS SHOWN FOR INFORMATION ONLY. DURING PAVEMENT PATCHING OPERATIONS, CARE SHOULD BE TAKEN TO MINIMIZE ANY DAMAGE TO THE UNDERDRAIN. ANY DAMAGE CAUSED TO THE UNDERDRAIN BY THE CONTRACTOR'S OPERATIONS SHALL BE REPAIRED BY THE CONTRACTOR AT THE CONTRACTOR'S EXPENSE.
4. ALL EASTBOUND WORK IS IN CONTRACT 60M64 AND ALL WESTBOUND WORK IS IN CONTRACT 60M66.

	DESIGNED - JAM	REVISED -
USER NAME = default	DRAWN - JAM	REVISED -
PLOT SCALE = $SCALE$	CHECKED - RR	REVISED -
PLOT DATE = 1/22/2011	DATE - 01/21/2011	REVISED -

HBP Illinois Partners

STATE OF ILLINOIS
DEPARTMENT OF TRANSPORTATION

TYPICAL SECTIONS
I-80 MAINLINE

SCALE: 1″=50′ | SHEET NO. 1 OF 7 SHEETS | STA. | TO STA.

F.A.I. RTE.	SECTION	COUNTY	TOTAL SHEETS	SHEET NO.
80	99(2&3)RS-3	WILL	200	5
		CONTRACT NO. 60M64		
FED. ROAD DIST. NO.	ILLINOIS	FED. AID PROJECT		

FILE NAME = c:\oddlib\pw\rrose\pwgreat_lakes\dms34565\D160M66-sht-typical(EAST).dgn