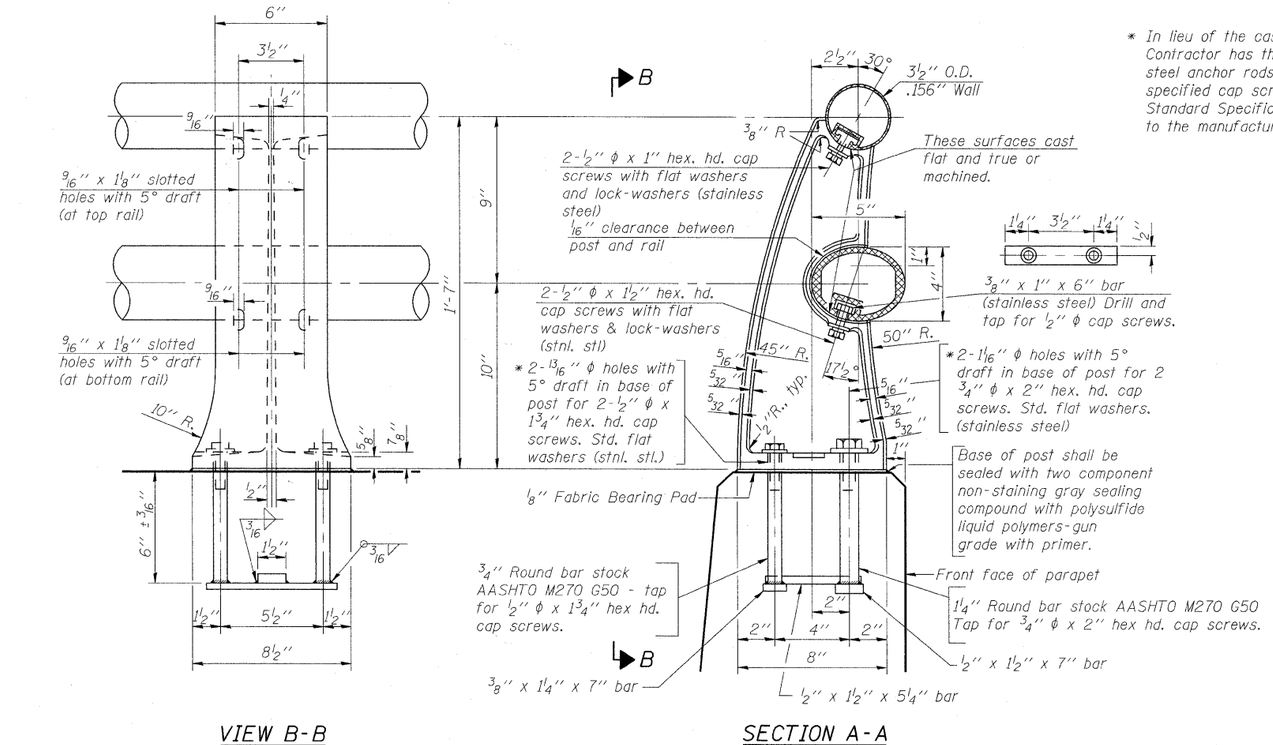

VIEW B-B

SECTION A-A

RAIL POST DETAILS

* In lieu of the cast-in-place anchor device shown, the Contractor has the option of drilling and setting stainless steel anchor rods of the same diameter and grade as the specified cap screws according to Article 509.06 of the Standard Specifications. Embedment shall be according to the manufacturer's specifications.

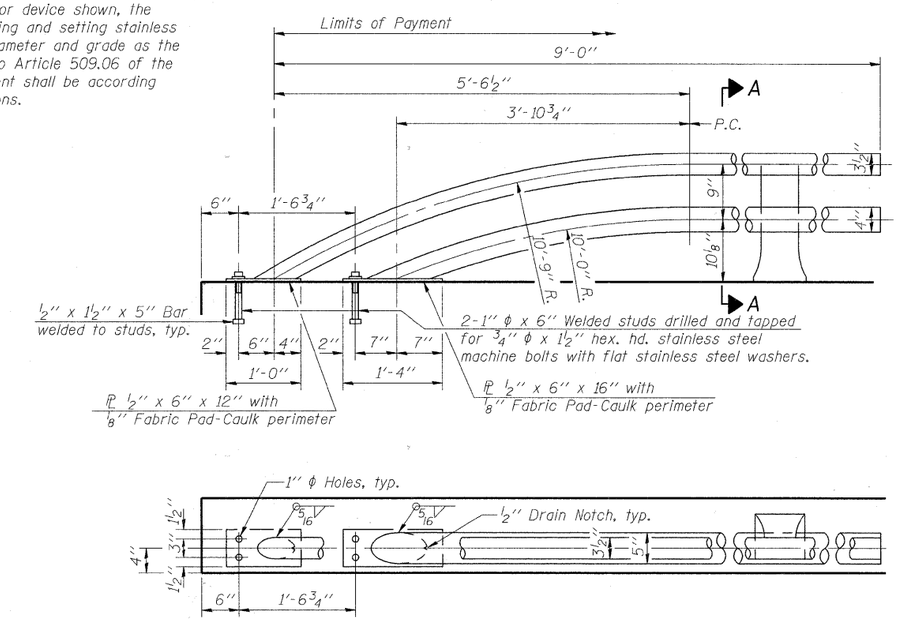

RAIL TERMINAL SECTION

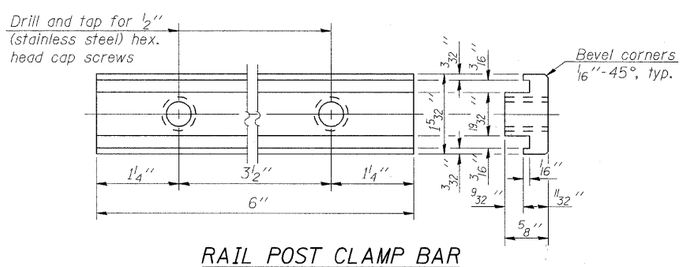

RAIL POST CLAMP BAR

For Top Rail

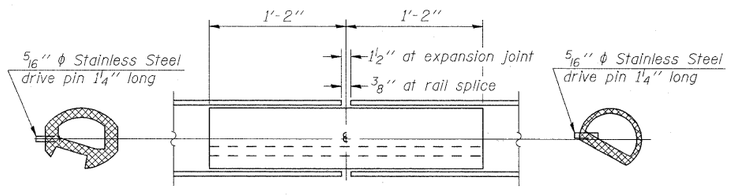

BOTTOM RAIL

TOP RAIL

RAIL SPLICE

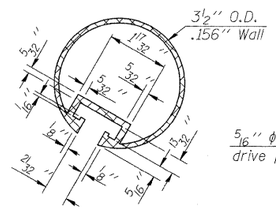

SECTION THRU TOP RAIL

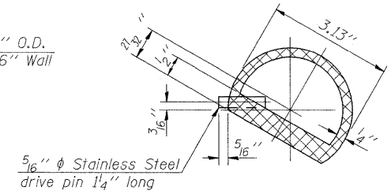

SECTION THRU SPLICE

For Top Rail

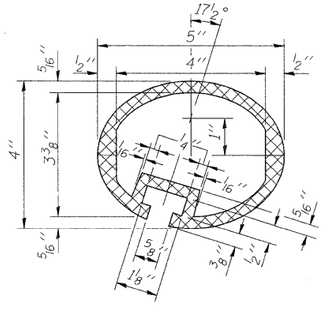

SEC. THRU ELLIPTICAL RAIL SECTION

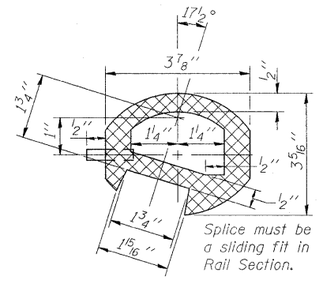

SEC. THRU SPLICE

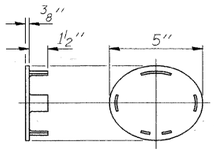

CAST END CAP

For bottom rail

DRIVE FIT TYPE

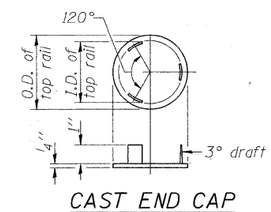

CAST END CAP

For top rail

Note:
The end rail post shall be set back as required for the terminal rail section.

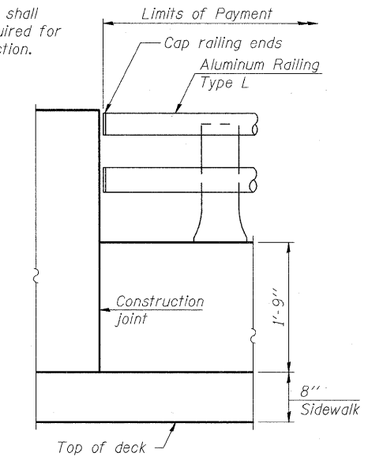

RAIL END TREATMENT FOR TYPE 5 AND 6 TERMINAL

Notes:
All Posts shall be normal to parapet.
All joints in rail shall be spliced per detail.
All exposed rail ends shall be capped per detail.
Provide 1-1/8" and 2-1/16" Aluminum Shims for 25% of the Posts. Rail elements shall be parallel to Grade-high spots will be ground and low spots shimmed.
See sheet of for rail post spacing.

BILL OF MATERIAL

Item	Unit	Quantity
Aluminum Railing, Type L	Foot	1,700

FILE NAME = P:\68155877\808 CAD\081 Drawings\Sheets\Structural\816-7726.IDOT-sht52-Aluminum Railing Type L Detail.dgn

AECOM

USER NAME = dabezicd	DESIGNED - DD	REVISED -	
PLOT SCALE = 0:1.0000 ':' / IN.	DRAWN - DD	REVISED -	
PLOT DATE = 1/21/2011	CHECKED - EJO	REVISED -	
	DATE - 01/20/2011	REVISED -	

STATE OF ILLINOIS
DEPARTMENT OF TRANSPORTATION

ALUMINUM RAILING, TYPE L DETAIL

SCALE: | SHEET NO. 52 OF 61 SHEETS | STA. | TO STA.

F.A.U. RTE.	SECTION	COUNTY	TOTAL SHEETS	SHEET NO.
1537	06-00050-00-GS	COOK	209	146

CONTRACT NO. 63556

ILLINOIS FED. AID PROJECT