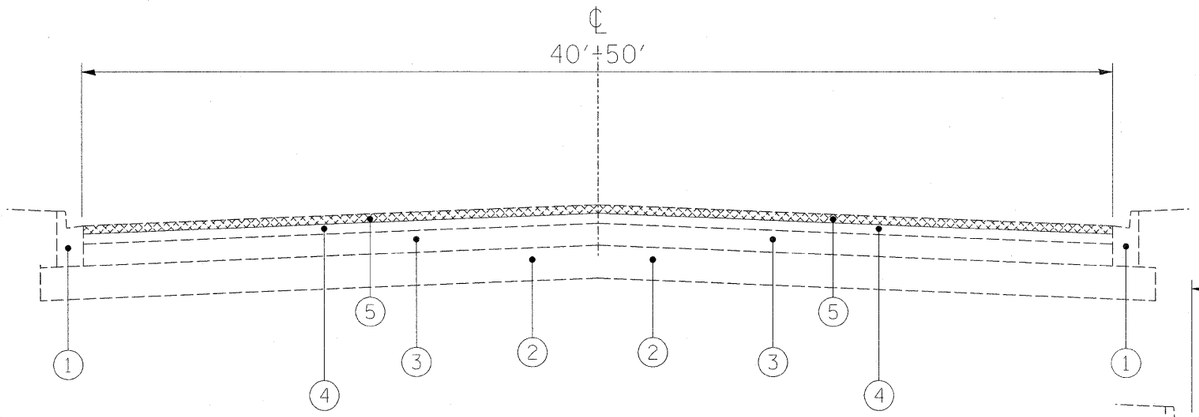


**EXISTING TYPICAL SECTION GRAND AVENUE**

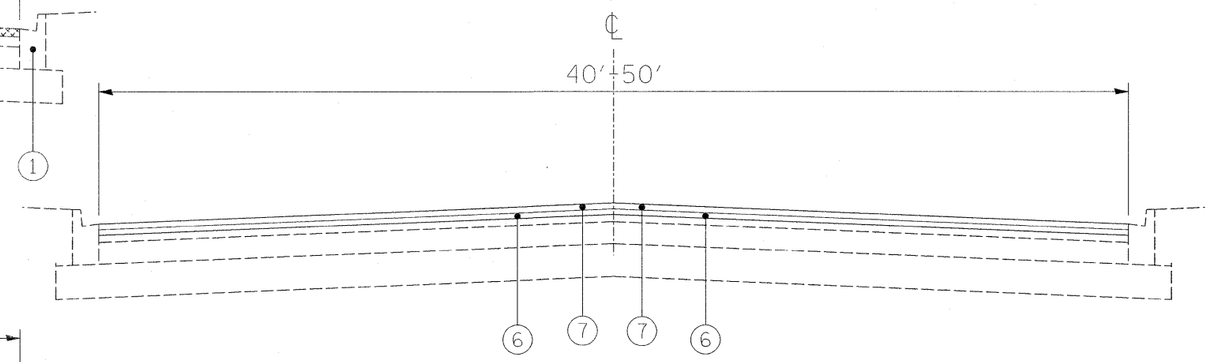


**PROPOSED TYPICAL SECTION GRAND AVENUE**

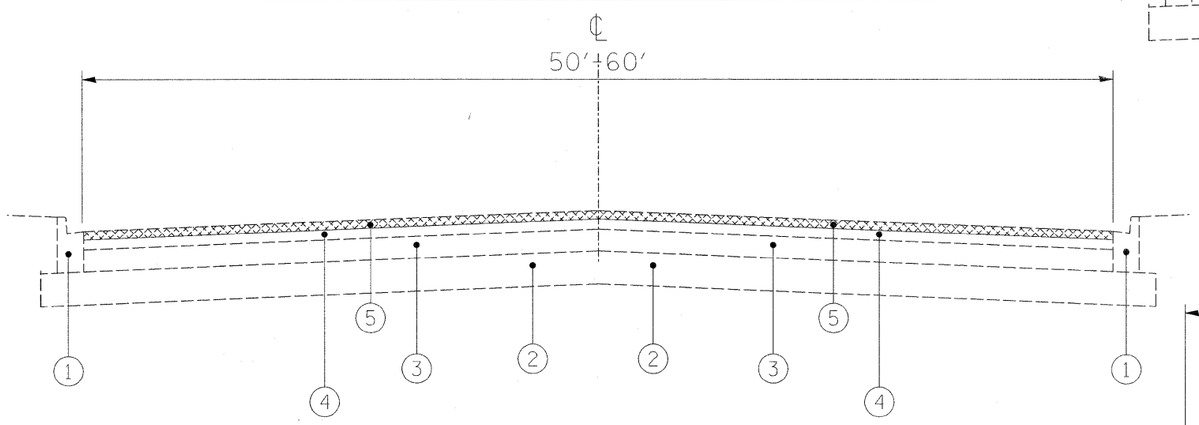


**EXISTING TYPICAL SECTION GRAND AVENUE**

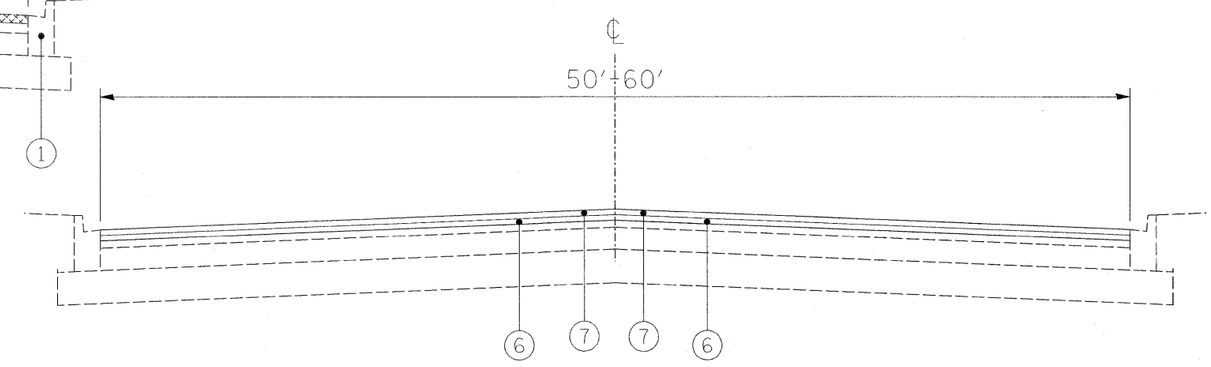


**PROPOSED TYPICAL SECTION GRAND AVENUE**

## LEGEND

1. EXISTING COMBINATION CURB AND GUTTER, TYPE B-6.12
2. EXISTING AGGREGATE BASE COURSE
3. EXISTING PCC PAVEMENT, ±10"
4. EXISTING HOT-MIX ASPHALT PAVEMENT, ±4" (BEFORE SURFACE REMOVAL)
5. HOT-MIX ASPHALT SURFACE REMOVAL, 2½"
6. PROPOSED POLYMERIZED LEVELING BINDER (MACHINE METHOD), IL-4.75, N50, ¾"
7. PROPOSED POLYMERIZED HOT-MIX ASPHALT SURFACE COURSE, "MIX F", N90, 1¾"

NOTE: CONTRACTOR SHALL PATCH BEFORE MILLING

## HOT-MIX ASPHALT MIXTURE

| MIXTURE TYPE | AIR VOIDS |
|---|---|
| POLYMERIZED HMA SURFACE COURSE, MIX "F", N90 (IL 9.5 mm) | 4% @ 70 Gyr. |
| POLYMERIZED LEVELING BINDER (MACHINE METHOD), IL-4.75, N50 | 4% @ 50 Gyr. |
| HMA REPLACEMENT OVER PATCHES (HMA BINDER, IL-19 mm) | 4% @ 70 Gyr. |
| CLASS D PATCH (HMA BINDER, IL-19mm) | 4% @ 70 Gyr. |

THE UNIT WEIGHT TO CALCULATE ALL HMA SURFACE MIXTURE QUANTITIES IS 112LBS/SY/IN.

THE "AC TYPE" FOR POLYMERIZED HMA MIXES SHALL BE "SBS/SBR PG 70-22" AND FOR NON-POLYMERIZED HMA THE "AC TYPE" SHALL BE "PG 64-22" UNLESS MODIFIED BY DISTRICT ONE SPECIAL PROVISIONS.
FOR "PERCENT OF RAP" SEE DISTRICT ONE SPECIAL PROVISIONS.

| | | | | | | | | | | |
|---|---|---|---|---|---|---|---|---|---|---|
| FILE NAME = $FILEL$ | USER NAME = $USER$ | DESIGNED - KSD | REVISED - | STATE OF ILLINOIS DEPARTMENT OF TRANSPORTATION | TYPICAL SECTIONS | F.A.U. RTE. | SECTION | COUNTY | TOTAL SHEETS | SHEET NO. |
| | | DRAWN - AZM | REVISED - | | | 1376 | (136,464EXT&0506) RS-6 | COOK | 27 | 4 |
| | PLOT SCALE = $SCALE$ | CHECKED - CMJ | REVISED - | | | | | CONTRACT NO. 60F67 | | |
| | PLOT DATE = $DATE$ | DATE - 01/13/10 | REVISED - | | SCALE: NTS / SHEET NO. 1 OF 1 SHEETS / STA. TO STA. | | ILLINOIS FED. AID PROJECT | | | |