Existing Structure: Existing Retaining Wall 35 was constructed in 1987 under C-91-433-85 (F.A.I. Route 90/94; Section 1985 - 080 R; Contract No. 80063). The existing wall consists of a reinforced concrete cantilever wall with reinforced concrete parapet above and barrier at base. It is comprised of two parts - a south portion that is supported along with the east wall of the ramp by a common foundation on four (4) rows of HP 12x53 steel piles and a north portion supported on spread footing. The approximate length of the wall is 55'-0".

Traffic Control: Traffic along the Taylor Street to NB I-90/94 Entrance Ramp will be detoured during construction. However, traffic along NB I-90/94 and Ramp NW will be maintained.

Salvage: No salvage.

TOTAL BILL OF MATERIAL

ITEM	UNIT	TOTAL
CONCRETE REMOVAL	CU YD	10.3

STATE OF ILLINOIS
MOUSSA A. ISSA
081-005738
CHICAGO, ILLINOIS
LICENSED STRUCTURAL ENGINEER

SIGNED Moussa A. Issa

DR. MOUSSA A. ISSA, S.E. IL. LIC. NO. 081-005738
EXPIRES 11-30-2020

DATE 01/29/2020

FOR SHEETS S11-01 THRU S11-02
AND AS11-01 THRU AS11-23
(TOTAL OF 25 SHEETS)

INDEX OF SHEETS

S11-01 General Plan and Elevation
S11-02 Existing Retaining Wall Partial Removal and Repairs
AS11-01 thru AS11-23 Existing Record Drawings

GENERAL NOTES:

1. For Removal Details, see Sheet S11-02.
2. Plan dimensions and details relative to existing plans are subject to nominal construction variations. The Contractor shall field-verify existing dimensions and details affecting new construction and make necessary approved adjustments prior to construction or ordering of materials. Such variations shall not be cause for additional compensation for a change in scope of the work; however, the Contractor will be paid for the quantity actually furnished at the unit price bid for the work.
3. Stations and offsets are measured from ℄ Taylor Street to NB I-90/94 Entrance Ramp to the front face of the wall.

SCOPE OF WORK

1. Perform concrete removal to limits shown on the Plans or as otherwise directed by the Engineer.
2. Construct Proposed Roadway Barrier with Base. See Roadway Plans for details and quantities.

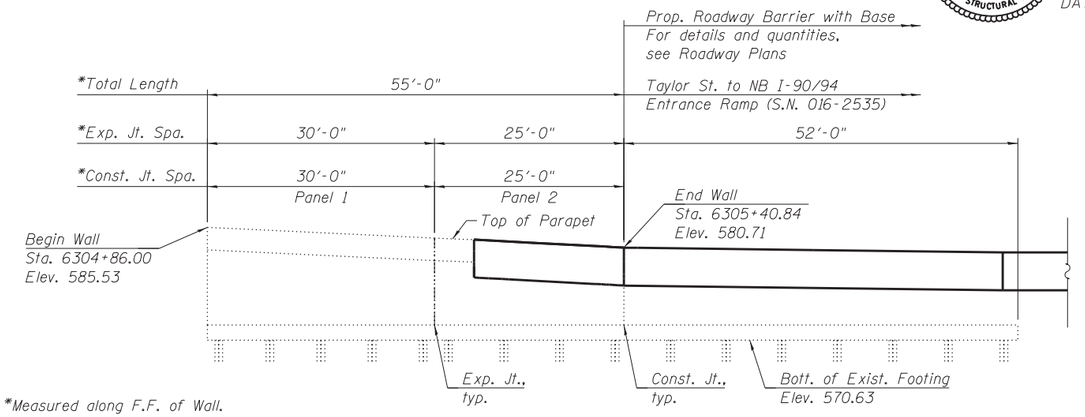

*Measured along F.F. of Wall.

ELEVATION
(Looking at F.F. of Wall)

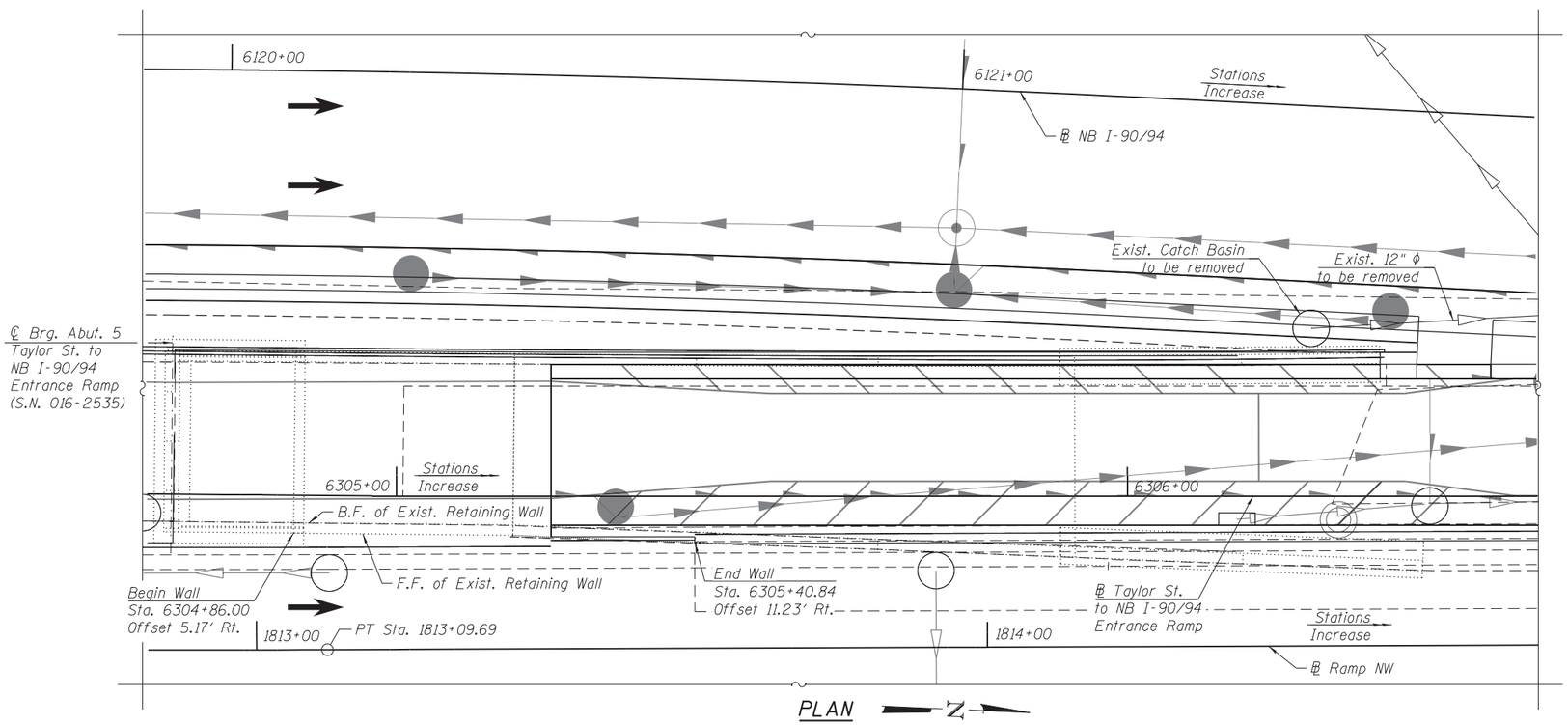

PLAN

LEGEND:

- Exist. Storm Sewer
- Exist. Combined Sewer
- Exist. Catch Basin
- Exist. Inlet
- Exist. Utility Handhole
- Exist. Manhole
- Exist. Traffic Signal
- Exist. Light Pole
- Exist. Sign
- Prop. Storm Sewer
- Prop. Pipe Underdrain
- Prop. Manhole
- Prop. Catch Basin
- B.F. Back Face
- F.F. Front Face

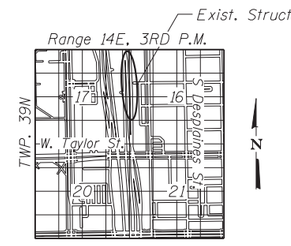

LOCATION SKETCH

GENERAL PLAN AND ELEVATION
EXISTING RETAINING WALL 35
F.A.I. RTE. 90/94- SECTION 2015-019R
COOK COUNTY
STA. 6304+86.00 TO STA. 6305+40.84

HBM ENGINEERING GROUP, LLC

USER NAME = hassan.issa	DESIGNED - JJS, HI	REVISED -	STATE OF ILLINOIS DEPARTMENT OF TRANSPORTATION	
	CHECKED - MI, MAI	REVISED -		
PLOT SCALE = N.T.S	DRAWN - HI	REVISED -		
PLOT DATE = 1/24/2020	CHECKED - MI, MAI	REVISED -		SHEET NO. S11-01 OF S11-02 SHEETS

F.A.I. RTE.	SECTION	COUNTY	TOTAL SHEETS	SHEET NO.
90/94/290	2015-019R	COOK	2155	1401
		CONTRACT NO. 62A76		
		ILLINOIS	FED. AID PROJECT	

FILE NAME: pw:\AECOM-NA-AWS1.aecomonline.local:AECOM_DS02_NA\Documents\01 Americas\Transportation\60269938 Circle\Phase_II\000_CAD\008_Structural\Structure_EXRW-34\Structure_EXRW-35\Final Plans\EXRW35-62A76-SHT-001
11:30:47 AM

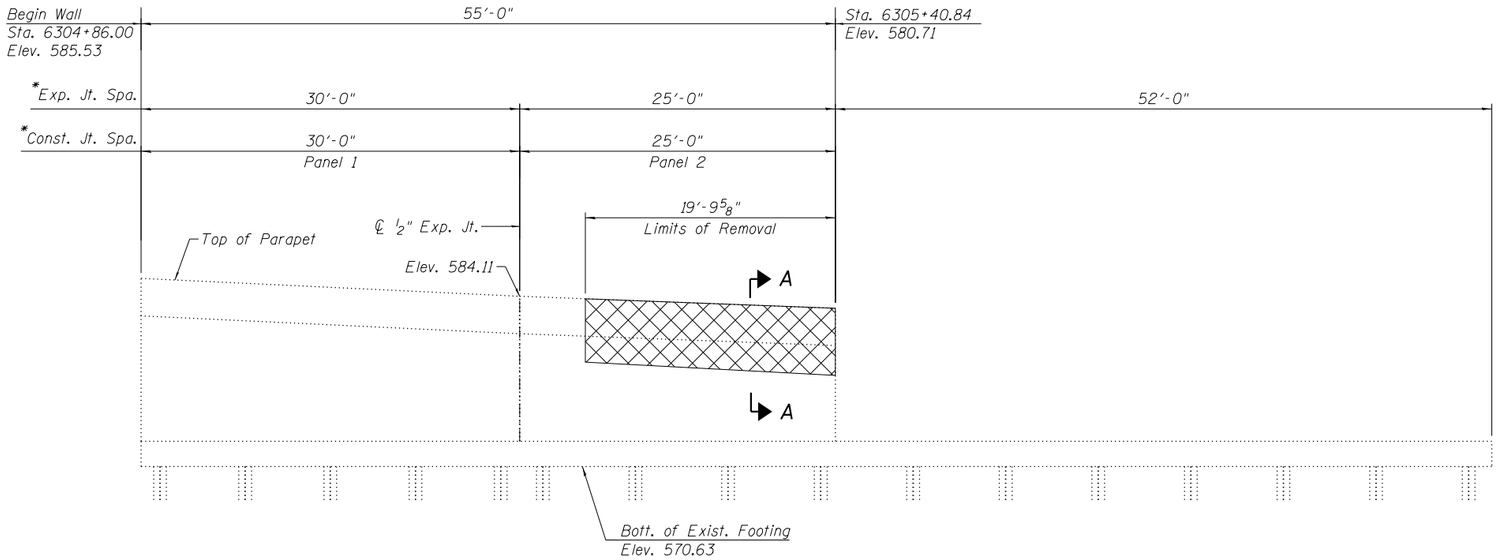

ELEVATION

(Looking at Front Face of Wall)

*Measured along F.F. of wall

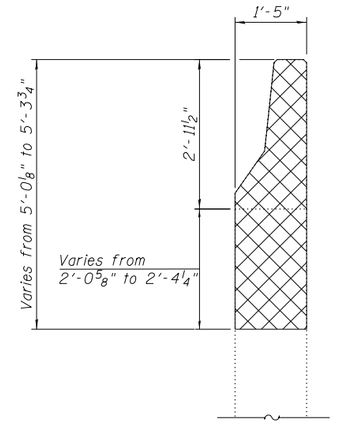

SECTION A-A

NOTES:

1. The Contractor shall take all necessary precautions during removal activities to avoid damage to existing utilities, structures or elements to remain. Any damage to existing elements caused by the Contractor in the performance of his/her work shall be repaired by the Contractor, to the satisfaction of the Engineer, at no cost to the Department.

LEGEND

Concrete Removal

F.F. - Front Face

FILE NAME: pw:\\AECOM-NA-AWS1.aecomonline.local:AECOM_DS02_NA\Documents\01 Americas\Transportation\60269938 Circle\Phase_II\000_CAD\008_Structural\Structure_EXRW-34\Structure_EXRW-35\Final Plans\EXRW35-62A76-SHT-002

11:30:55 AM

HBM ENGINEERING GROUP, LLC

USER NAME = hassan.issa	DESIGNED - JJS, JMI	REVISED -	STATE OF ILLINOIS DEPARTMENT OF TRANSPORTATION	EXISTING RETAINING WALL PARTIAL REMOVAL AND REPAIRS	
	CHECKED - MI, MAI	REVISED -			
PLOT SCALE = N.T.S	DRAWN - JMI	REVISED -			
PLOT DATE = 1/24/2020	CHECKED - MI, MAI	REVISED -		SHEET NO. S11-02 OF S11-02 SHEETS	

F.A.I. RTE.	SECTION	COUNTY	TOTAL SHEETS	SHEET NO.
90/94/290	2015-019R	COOK	2155	1402
		CONTRACT NO. 62A76		
	ILLINOIS	FED. AID PROJECT		

FOR INFORMATION ONLY

INDEX OF VOLUMES

VOL. NO.	DESCRIPTION	NO. OF SHEETS
1.	ROADWAY PLANS & GENERAL SHEETS	151
2.	MAINTENANCE OF TRAFFIC & ROADWAY CROSS SECTIONS	81 ⚠
3.	BRIDGES & ASSOCIATED STRUCTURES	79
4.	RETAINING WALLS AND MISC. STRUCTURES	38
5.	ROADWAY LIGHTING & SURVEILLANCE	36
	TOTAL	386

STATE OF ILLINOIS
DEPARTMENT OF TRANSPORTATION
DIVISION OF HIGHWAYS

PLANS FOR PROPOSED FEDERAL AID INTERSTATE HIGHWAY

SCALES	
PLAN	1 INCH = 50 FEET
PROFILE HORIZ.	1 INCH = 50 FEET
PROFILE VERT.	1 INCH = 5 FEET
CROSS SECTIONS	1 INCH = 10 FEET HORIZONTAL 1 INCH = 5 FEET VERTICAL

VOLUME NO. 3

F.A.I. ROUTE 90/94 (DAN RYAN EXPRESSWAY)

SECTION 1985 - 080 R

~~PROJECT~~

COOK COUNTY

C-91-433-85

ROADWAY GRADING AND PAVING
MAXWELL STREET TO I-290

F.A. RTE.	SECTION	COUNTY	TOTAL SHEETS	SHEET NO.
90/94	*	COOK	79	1
F.H.W.A. REG.	ILLINOIS	PROJECT		

* 1985-080 R
P-91-179-84

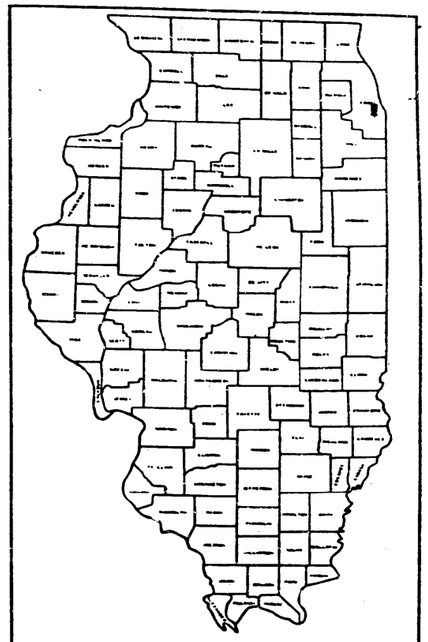

LOCATION OF SECTION INDICATED THUS: — ▬▬

PROJECT ENDS
STA. 17+50 (S.B.)
STA. 14+75 (N.B.)
DAN RYAN EXPRESSWAY

STA. EQ. SE. DAN RYAN EXPRESSWAY
STA. 16+37.86 BK =
STA. 16+37.67 AHD.

STA. EQ. SB. DAN RYAN EXPRESSWAY
STA. 209+97.18 BK =
STA. 3+11.69 AHD

PROJECT BEGINS
STA. 183+13.36
DAN RYAN EXPRESSWAY

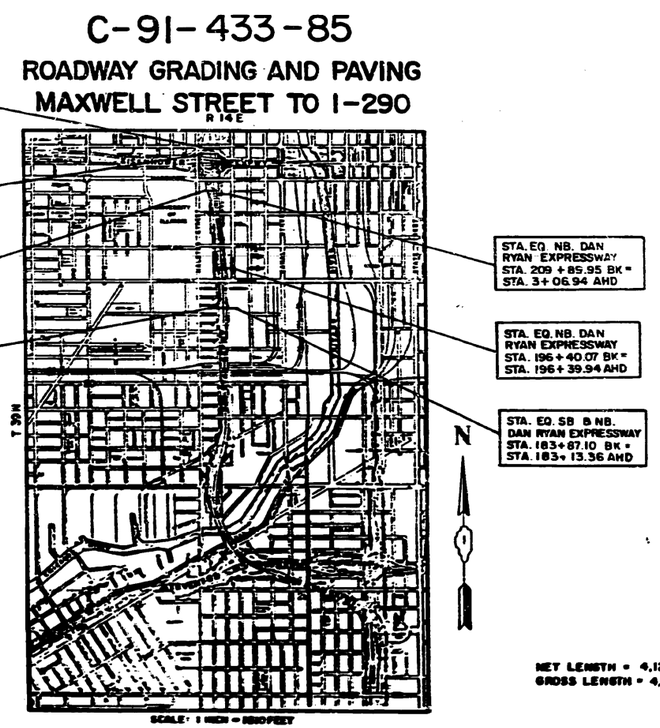

STA. EQ. NB. DAN RYAN EXPRESSWAY
STA. 209+85.95 BK =
STA. 3+06.94 AHD

STA. EQ. NB. DAN RYAN EXPRESSWAY
STA. 196+40.07 BK =
STA. 196+39.94 AHD

STA. EQ. SB & NB. DAN RYAN EXPRESSWAY
STA. 183+87.10 BK =
STA. 183+13.36 AHD

NET LENGTH = 4,122.32 LIN. FT. (0.78 MILES)
GROSS LENGTH = 4,122.32 LIN. FT. (0.78 MILES)

DESIGN DESIGNATION

DAN RYAN EXPRESSWAY (MAINLINE S.B. & N.B.) 163,700 (2000) TRUNK 118.41 (13" CRPCC - 20)

COLLECTOR-DISTRIBUTOR (S.B. & N.B.) 28,100 (2000) COLLECTOR 21.63 (13" CRPCC - 20)

N.B. ROOSEVELT RD./RUBLE ST.
S.B. ROOSEVELT RD./UNION AVE.
N.B. TAYLOR ST. ENTRANCE RAMP } 19,300 (2000) AREA SERVICE 16.08 (12" PCC - 20)

TAYLOR ST. MAINLINE EXIT
AND RAMP W-S } 7,700 (2000) AREA SERVICE 4.67 (10" PCC - 20)

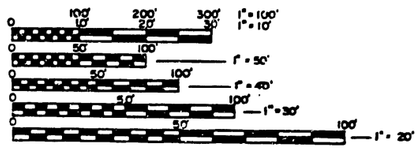

FULL SIZE PLANS HAVE BEEN PREPARED USING STANDARD ENGINEERING SCALES. REDUCED SIZED PLANS WILL NOT CONFORM TO STANDARD SCALES. IN MAKING MEASUREMENTS ON REDUCED PLANS, THE ABOVE SCALES MAY BE USED.

CONTRACT NO. 80063

STATE OF ILLINOIS
DEPARTMENT OF TRANSPORTATION
DIVISION OF HIGHWAYS

SUBMITTED _____ 19__
DISTRICT ENGINEER
ESTABLISHED _____ 19__
DIRECTOR OF PLANS AND ENVIRONMENT
PASSED _____ 19__
SECRETARY OF ROADS
APPROVED _____ 19__
FEDERAL ENGINEER OF ROADS

SHEET 61 OF 2

DEPARTMENT OF TRANSPORTATION
FEDERAL HIGHWAY ADMINISTRATION
DIVISION ENGINEER
DATE

E. Revision - May 23, 1987

CONSULTANT SECTION ENGINEER: R. HEMSTREET / J. HOB 312 705 - 4269

COUNTY COOK SECTION 1985 - 080 R ROUTE I 90/94 (DAN RYAN EXPRESSWAY)

HBM ENGINEERING GROUP, LLC	USER NAME = hassan.issa	DESIGNED - JJS, JMI	REVISED -	STATE OF ILLINOIS DEPARTMENT OF TRANSPORTATION	EXISTING RECORD DRAWINGS
		CHECKED - MI, MAI	REVISED -		
	PLOT SCALE = N.T.S	DRAWN - JMI	REVISED -		SHEET NO. AS11-010FAS11-23 SHEETS
	PLOT DATE = 1/24/2020	CHECKED - MI, MAI	REVISED -		

F.A.I. RTE.	SECTION	COUNTY	TOTAL SHEETS	SHEET NO.
90/94/290	2015-019R	COOK	2155	1403
		CONTRACT NO. 62A76		
	ILLINOIS	FED. AID PROJECT		

FILE NAME: pw:\\AECOM-NA-AWS1.aecomonline.local:AECOM_DS02_NA\Documents\01 Americas\Transportation\60269938 CirclePhase_III\000_CAD\008_StructuralStructure_EXRW-341Structure_EXRW-35\Final Plans\EXRW35-62A76-SHT-003

11:31:10 AM

FOR INFORMATION ONLY

FEDERAL AID ROUTE NO.	SECTION	COUNTY	TOTAL SHEETS	SHEET NO.
90/94	*	COOK	79	20
STA.		TO STA.		
FED. RD. DIST. NO.	ILLINOIS	FED. AID PROJECT		

*1985-080 R

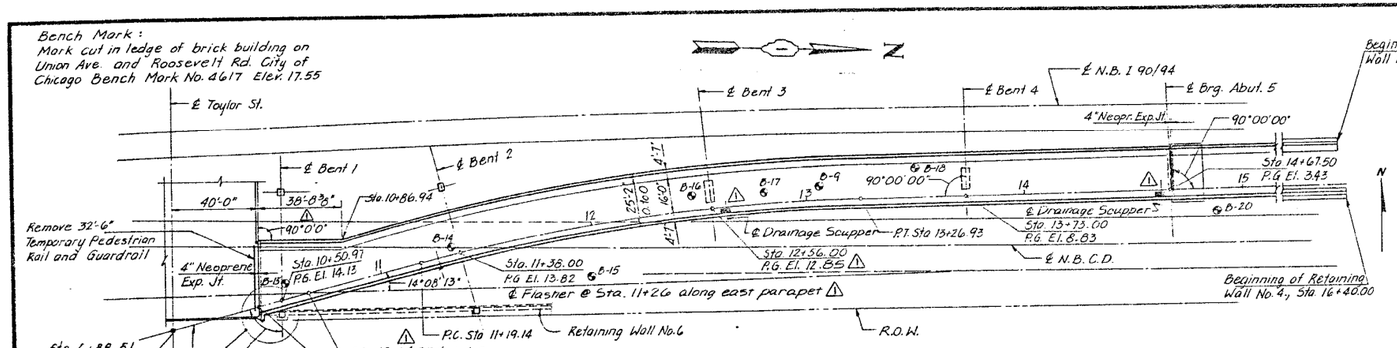

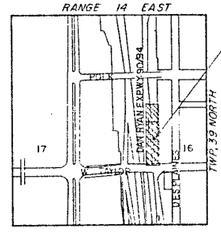

LOCATION PLAN

TOTAL BILL OF MATERIAL

ITEM	UNIT	SUPER	SUB ①	TOTAL	
Structure Excavation	Cu. Yd		1738	1738	⚠
Protective Coat	Sq. Yd	348	209	557	⚠
Class X Concrete	Cu. Yd		584.0	584.0	⚠
Class X Concrete Superstructure	Cu. Yd	382.0		382.0	
Furnishing and Erecting Structural Stl.	L. Sum	0.29		0.29	⚠
Stud Shear Connectors	Each	4,582		4,582	
Reinforcement Bars (Epoxy Coated)	Pound	87480	21,420	108,900	⚠
Reinforcement Bars	Pound		52,490	52,490	⚠
Name Plate	Each		1	1	
Elastomeric Bearing Assembly Type II	Each	4		4	
Pedestrian Railing - 6 ft	Lin. Ft	40		40	⚠
Neoprene Expansion Joint 4"	Lin. Ft	60		60	
Caisson Shafts 36"	Cu. Ft.		911	911	
Caisson Shafts 48"	Cu. Ft		1395	1395	
Caisson Bells	Cu. Ft		1546	1546	
Geocomposite Wall Drain	Sq. Yd.		250	250	
Driving Steel Piles	Lin. Ft.		3114	3114	⚠
Furnishing Steel Piles (HP 12x53)	Lin. Ft		3,114	3,114	⚠
Test Piles (HP 12x53)	Each		2	2	
Pipe Underdrain - 6" ϕ	Lin. Ft		329	329	⚠
Floating Bearings, Expansion, 200 K	Each	1		1	
Floating Bearings, Guided Expansion, 350K	Each	2		2	
Floating Bearings, Guided Expansion, 500K	Each	2		2	
Floating bearings, Fixed, 500 K	Each	2		2	
Floating bearings, Expansion, 600 K	Each	1		1	
Drainage Scuppers	Each	2		2	⚠
Downspout Drainage System	Lin Ft		33	33	⚠

① Substructure quantities also include Retaining Wall Nos. 4 & 5 and Abutment No. 5

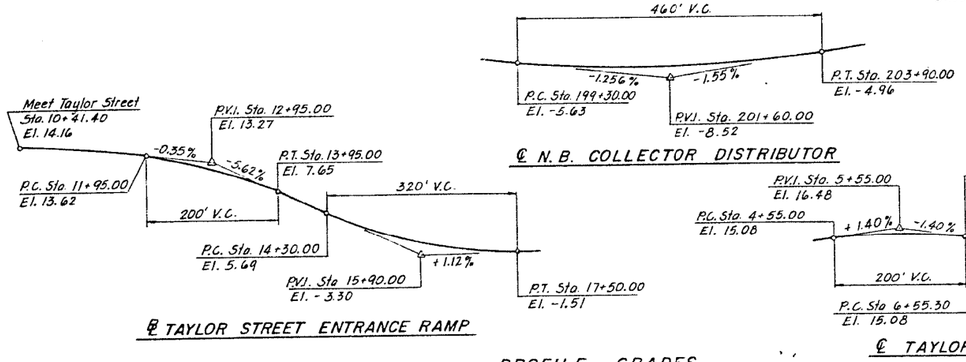

PROFILE GRADES

CURVE DATA

℄ TAYLOR ST. ENT. RAMP

△ = 14°32'45"
R = 818.51'
D = 7°00'00"
T = 104.46'
L = 207.80'
E = 6.64'
SE = 0.03'/Ft
Sta 10+52.47 Start N.C.
Sta 11+52.47 S.E.
Sta. 12+93.60 S.E.
Sta. 13+93.60 End N.C.

STATION 12+54.45
BUILT 198 BY
STATE OF ILLINOIS
SECTION 1985-080R
F.A. PROJ. IDR-94-3(268)
LOADING HS 20
STR. NO. 016-2535

NAME PLATE
(See Std. 2113)

DESIGN SPECIFICATION

AASHTO-1983 Standard Specifications for Highway Bridges with 1984 and 1985 Interim Specifications.
Loading:
HS 20-44 and Allowance for 25 P.S.F. future wearing surface.

Design Stresses:
f'c = 3500 P.S.I.
fy = 60,000 P.S.I. (Reinf.) Gr. 60
fy = 50,000 P.S.I. (M-223) Gr. 50 Struct. Stl.

Allowable soil bearing pressure = 8 K.S.F. (Caisson)

Load Factor Design Method

GENERAL NOTES

FOR SOIL BORING LOGS SEE PROPOSAL.

CALCULATED WEIGHT OF STRUCTURAL STEEL = M-223 = 450,700 LBS., M-183 = 19,800 LBS. ⚠

THE MAIN LOAD CARRYING MEMBER COMPONENTS SUBJECT TO TENSILE STRESSES SHALL CONFORM TO THE SUPPLEMENTAL REQUIREMENTS FOR NOTCH TOUGHNESS ZONE 2. THESE COMPONENTS INCLUDE TENSION FLANGES AND WEBS OF PLATE GIRDERS, WIDE FLANGE BEAMS AND ALL SPLICE PLATES MATERIAL OF THE WELDED PLATE GIRDERS AND ARE DESIGNATED ON THE PLANS BY "N.T.R.".

REINFORCEMENT BARS SHALL CONFORM TO THE REQUIREMENTS OF AASHTO M-31, M-42 OR M-53 GRADE 60.

CONTRACTOR SHALL PLACE REINFORCEMENT BARS AT THE TOP OF PIER CAP IN SUCH A MANNER AS TO MISS ANCHOR BOLTS.

FIELD WELDING OF CONSTRUCTION ACCESSORIES WILL NOT BE PERMITTED TO THE BOTTOM FLANGE OF BEAMS OR GIRDERS NOR TO THE TOP FLANGE FOR A DISTANCE EQUAL TO ONE-FOURTH THE SPAN LENGTH EACH WAY FROM THE PIER SUPPORTS. FIELD WELDING IN OTHER AREAS WILL BE PERMITTED ONLY WHEN APPROVED BY THE ENGINEER.

ANCHOR BOLTS SHALL BE SET BEFORE BOLTING DIAPHRAGMS OR CROSS FRAMES OVER SUPPORTS.

FASTENERS SHALL CONFORM TO THE REQUIREMENT OF AASHTO M164 TYPE I (ASTM A325). ALL FASTENERS SHALL BE 7/8" DIAMETER UNLESS OTHERWISE NOTED WITH 15/16" DIAMETER BOLT HOLES. BOLT HOLES SHALL BE DRILLED 1-1/16" DIAMETER FOR 7/8" DIAMETER BOLTS AT CROSS FRAME CONNECTIONS. DIAPHRAGMS SHALL BE CONNECTED WITH 3/4" DIAMETER BOLTS AND BOLT HOLES SHALL BE PREDRILLED TO 15/16" DIAMETER. HARDENED WASHERS SHALL BE USED FOR ALL CROSS FRAME AND DIAPHRAGM CONNECTION.

ALL HIGH STRENGTH BOLT CONNECTIONS SHALL CONFORM TO THE REQUIREMENTS OF THE LATEST ISSUE OF THE SPECIFICATIONS FOR STRUCTURAL JOINTS USING ASTM A325 (M164) OR A490 (M253) BOLTS FOR SLIP-CRITICAL CONNECTIONS. EXCEPT TIGHTENING METHODS USING EITHER THE LOAD INDICATING WASHERS OR THE CALIBRATED WRENCH ARE NOT ALLOWED.

ROADWAY EXPANSION GUARDS SHALL BE ASSEMBLED IN THE PROPER POSITION WITH THE ENDS IN PLACE AND SHALL BE LEFT ASSEMBLED FOR SHOP INSPECTION.

THE ROADWAY EXPANSION PLATES SHALL BE FLAME CUT AS PROVIDED IN ARTICLE 507.04(1) OF THE STANDARD SPECIFICATIONS.

BEARING SEAT SURFACES SHALL BE CONSTRUCTED OR ADJUSTED TO THE DESIGNATED ELEVATIONS WITHIN A TOLERANCE OF 1/8 INCH. ADJUSTMENT SHALL BE MADE EITHER BY GRINDING THE SURFACE OR BY SHIMMING THE BEARINGS. TWO 1/8" ADJUSTING SHIMS, OF THE DIMENSIONS OF THE BOTTOM BEARING PLATE, SHALL BE PROVIDED FOR EACH BEARING IN ADDITION TO ALL OTHER PLATES OR SHIMS. (FOR TYPE I ELASTOMERIC BEARINGS, SHIMS OF THE DIMENSIONS OF TOP PLATE BE PROVIDED AND PLACED AS DETAILED).

ALL CONTACT SURFACES OF JOINTS FOR THE DIAPHRAGMS, CROSS FRAMES AND/OR LATERAL BRACINGS SHALL BE FREE OF PAINT OR LACQUER.

THE ZINC-SILICATE AND VINYL PAINT SYSTEM SHALL BE USED FOR SHOP AND FIELD PAINTING OF STRUCTURAL STEEL EXCEPT WHERE OTHERWISE NOTED.

EXTERIOR BEAMS: THE FINAL FINISH COAT SHALL BE A MEDIUM YELLOW VINYL ENAMEL PAINT WHICH CONFORMS WITH SECTION 712, ARTICLE 712.26 OF THE STANDARD SPECIFICATION AND AS DIRECTED BY THE ENGINEER. THE INTERMEDIATE COAT SHALL BE A HIGH-BUILT VINYL PAINT OF A COLOR WHICH SHALL BE DISTINCT FROM THE FINAL COAT. ⚠

INTERIOR BEAMS: THE FINISH COAT SHALL BE AN ALUMINUM COLORED HIGH-BUILD VINYL PAINT WHICH CONFORMS WITH SECTION 712, ARTICLE 712.26 OF THE SUPPLEMENTAL AND AS DIRECTED BY THE ENGINEER. ⚠

STATE OF ILLINOIS
RALPH E. SMITH
81-3535
REGISTERED STRUCTURAL ENGINEER

SHEET ENT. 1 OF 18

REVISIONS	
Name	Date

⚠ Revision - Nov. 23, 1987

STATE OF ILLINOIS
DEPARTMENT OF TRANSPORTATION
F.A.I. ROUTE 90/94 (DAN RYAN EXPRESSWAY)
SECTION 1985-080 R COOK COUNTY
ROADWAY GRADING AND PAVING
TAYLOR ST. ENTRANCE RAMP OVER N.B. COLL. DIST.
PLAN AND ELEVATION
Scale: NONE Drawn By: D.C.
Date: AUG. 14, 1987 Checked By: WW
ENVIRODYNE ENGINEERS INC.
Chicago, Illinois

FILE NAME: pw:\AECOM-NA-AWS1.aecomonline.local:AECOM_DS02_NA\Documents\01 Americas\Transportation\60269938 Circle\Phase_II\000_CADD\008_StructuralStructure_EXRW-34\Structure_EXRW-35\Final Plans\EXRW35-62A76-SHT-003

HBM ENGINEERING GROUP, LLC	USER NAME = hassan.issa	DESIGNED - JJS, JMI	REVISED -	STATE OF ILLINOIS DEPARTMENT OF TRANSPORTATION	EXISTING RECORD DRAWINGS
		CHECKED - MI, MAI	REVISED -		
	PLOT SCALE = N.T.S	DRAWN - JMI	REVISED -		SHEET NO. AS11-020FAS11-23 SHEETS
	PLOT DATE = 1/24/2020	CHECKED - MI, MAI	REVISED -		

F.A.I. RTE.	SECTION	COUNTY	TOTAL SHEETS	SHEET NO.
90/94/290	2015-019R	COOK	2155	1404
		CONTRACT NO. 62A76		
	ILLINOIS FED. AID PROJECT			

11:32:05 AM

FOR INFORMATION ONLY

FEDERAL AID ROUTE NO.	SECTION	COUNTY	TOTAL SHEETS	SHEET NO.
90/94	*	COOK	79	21
STA.		TO STA.		
FED. RD. DIST. NO.	ILLINOIS	FED. AID PROJECT		

*1985-080 R

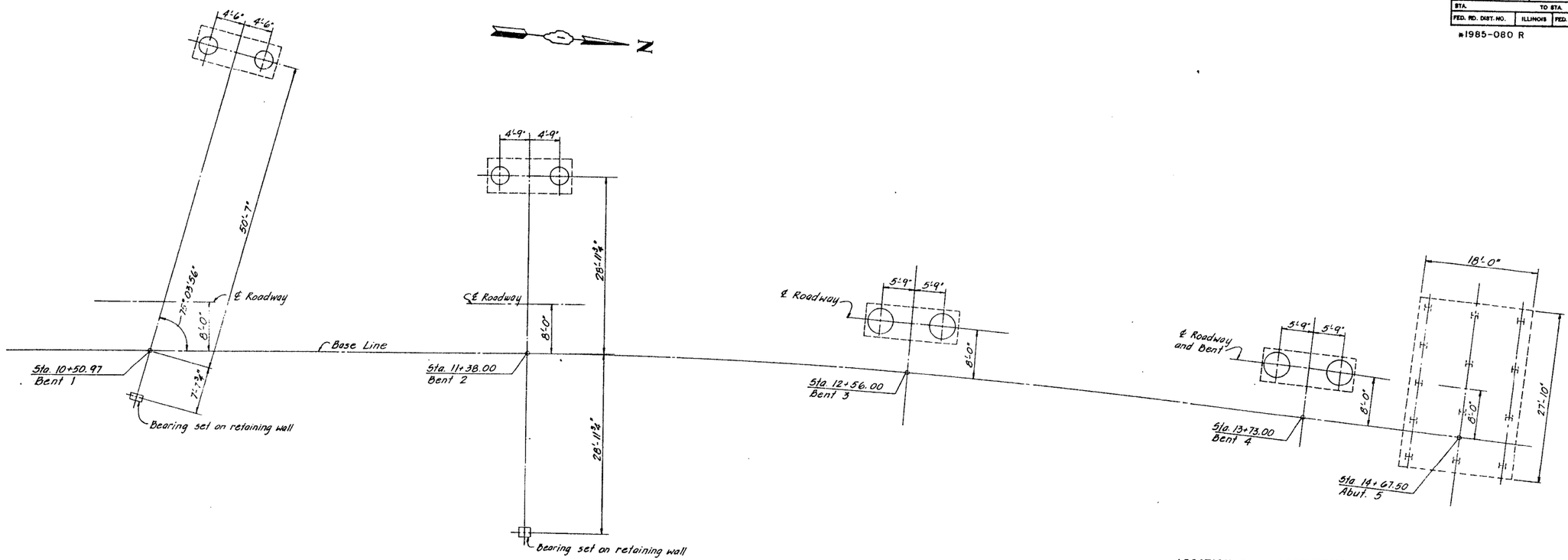

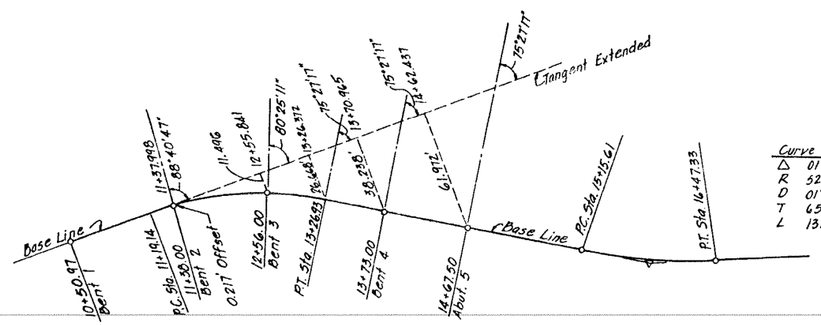

Curve Data	
△	01°27'00"
R	5204.88'
D	01°06'03"
T	65.86'
L	131.72'

Curve Data	
△	14°32'43"
R	618.51'
D	7°00'00"
T	104.46'
L	207.80

Note:
All Abutments and Bents are normal to Base Line except Bent 1.

BASE LINE GEOMETRY
N.T.S.

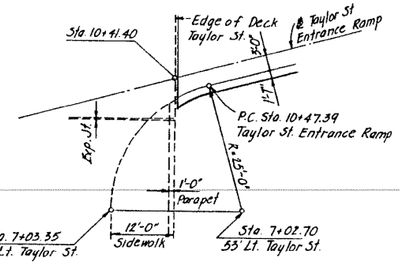

DETAIL - 1

LOCATION OF CONSTRUCTION AND EXPANSION JOINTS

	Station		Offset to Back of Wall		Type of Joint
Retaining Wall No. 4	16+40.00	(℄ Taylor St. Ent. Ramp)	8.00'	R	Beginning of Wall
	16+15.44	"	6.78'	R	Construction
	15+90.50	"	5.65'	R	Expansion
	15+65.54	"	4.64'	R	Construction
	15+40.58	"	3.76'	R	Construction
	15+15.61	"	3.00'	R	Expansion
	14+85.61	"	3.00'	R	End of Wall
Retaining Wall No. 5	16+34.44	(℄ Taylor St. Ent. Ramp)	19.00'	L	beginning of Wall
	16+15.44	"	19.00'	L	Construction
	15+90.50	"	19.00'	L	Expansion
	15+65.54	"	19.00'	L	Construction
	15+40.58	"	19.00'	L	Construction
	15+15.61	"	19.00'	L	Expansion
	14+85.61	"	19.00'	L	End of Wall

SHEET ENT. 2 OF 18

REVISIONS	
Name	Date

STATE OF ILLINOIS
DEPARTMENT OF TRANSPORTATION
F.A.I. ROUTE 90/94 (DAN RYAN EXPRESSWAY)
SECTION 1985-080 R COOK COUNTY
ROADWAY GRADING AND PAVING
TAYLOR ST. ENTRANCE RAMP OVER N.B. COLL. DIST.
SUBSTRUCTURE LAYOUT
Scale:
Date: 7-16-87
Drawn By: D C
Checked By: W W
ENVIRODYNE ENGINEERS INC.
Chicago, Illinois

HBM ENGINEERING GROUP, LLC	USER NAME = hassan.issa	DESIGNED - JJS, JMI	REVISED -	
		CHECKED - MI, MAI	REVISED -	
	PLOT SCALE = N.T.S	DRAWN - JMI	REVISED -	
	PLOT DATE = 1/24/2020	CHECKED - MI, MAI	REVISED -	

STATE OF ILLINOIS
DEPARTMENT OF TRANSPORTATION

EXISTING RECORD DRAWINGS

SHEET NO. AS11-030FAS11-23 SHEETS

F.A.I. RTE.	SECTION	COUNTY	TOTAL SHEETS	SHEET NO.
90/94/290	2015-019R	COOK	2155	1405
		CONTRACT NO. 62A76		
		ILLINOIS	FED. AID PROJECT	

FILE NAME: pw:\\AECOM-NA-AWS1.aecomonline.local:AECOM_DS02_NA\Documents\01 Americas\Transportation\60269938 CircleyPhase_II\000_CAD\008_Structural\Structure_EXRWI-34\Structure_EXRW-35\Final Plans\EXRW35-62A76-SHT-003
11:32:38 AM

FOR INFORMATION ONLY

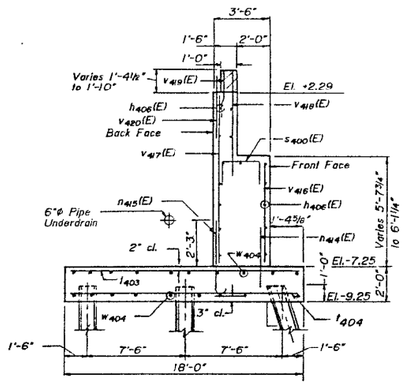

SECTION

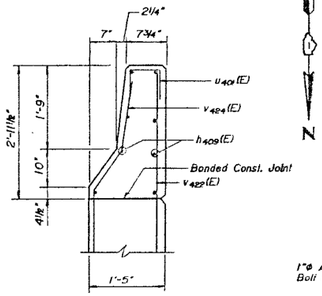

SECTION A-A

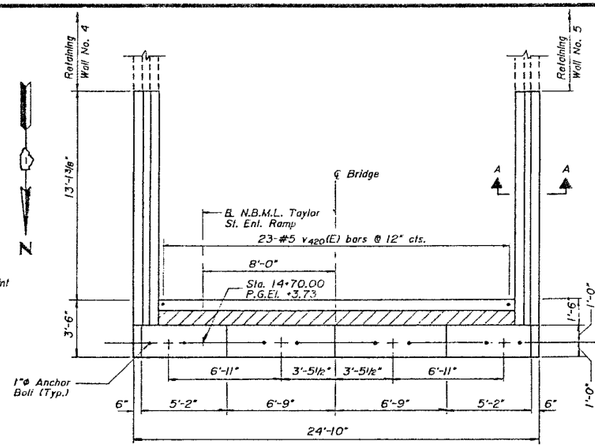

TOP VIEW

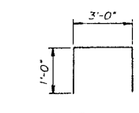

BAR s400(E)

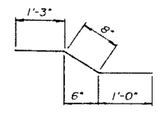

BAR v419(E)

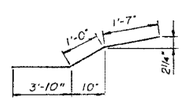

BAR v424(E)

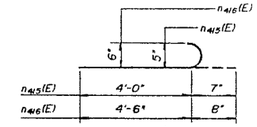

BARS n415(E), n416(E)

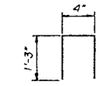

BAR u401(E)

FEDERAL AID ROUTE NO.	SECTION	COUNTY	TOTAL SHEETS	SHEET NO.
90/94	1985-080R	COOK	79	33
STA.		TO STA.		
FED. RD. DIST. NO.	ILLINOIS	FED. AID PROJECT		

ABUTMENT NO. 5 BILL OF MATERIAL

Bar	No.	Size	Length	Shape
h406(E)	20	#5	24'-4"	
h407(E)	8	#5	3'-3"	
h408(E)	24	#5	16'-3"	
h409(E)	40	#5	14'-3"	
n414(E)	53	#5	3'-6"	
n415(E)	25	#5	4'-7"	
n416(E)	28	#6	5'-2"	
s400(E)	25	#5	5'-0"	
1403	28	#5	17'-8"	
1404	48	#7	17'-8"	
u401(E)	20	#4	2'-10"	
v416(E)	25	#5	5'-3"	
v417(E)	25	#5	9'-3"	
v418(E)	23	#5	6'-6"	
v419(E)	23	#5	2'-11"	
v420(E)	23	#5	3'-0"	
v421(E)	4	#5	6'-0"	
v422(E)	28	#5	12'-8"	
v423(E)	28	#6	9'-9"	
v424(E)	32	#5	6'-5"	
v425(E)	4	#5	4'-6"	
W404	38	#5	27'-6"	

Item	Unit	Quantity	
Structure Excavation	Cu.Yd.	230	⚠
Class X Concrete	Cu.Yd.	79.2	⚠
Protective Coat	Sq.Yd.	95.6	
Reinforcement Bars	Lbs.	3340	
Reinforcement Bars Epoxy Coated	Lbs.	3630	⚠
Steel Piles HP 12×53	Lin.Ft.	720	
Test Pile Steel HP 12×53	Each	1	
Pipe Underdrain-6"ø	Lin.Ft.	49	⚠
Geocomposite Wall Drain	Sq.Yd.	55	
Driving Steel Piles	Lin.Ft.	720	

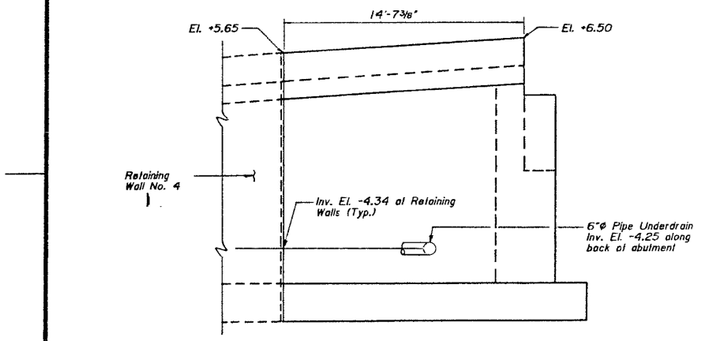

EAST ELEVATON

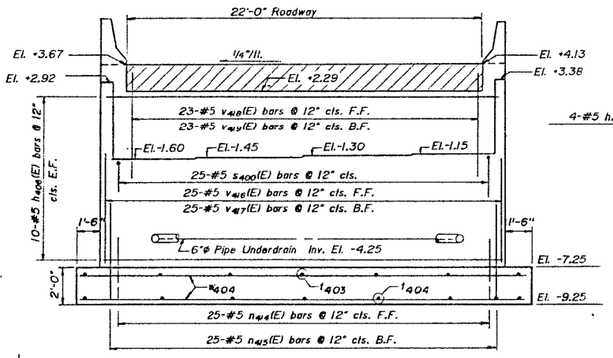

FRONT ELEVATION

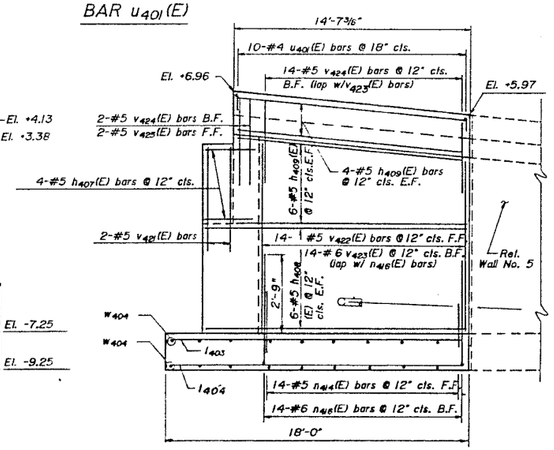

WEST ELEVATON

Note: Reinforcement in East Elevation typical.

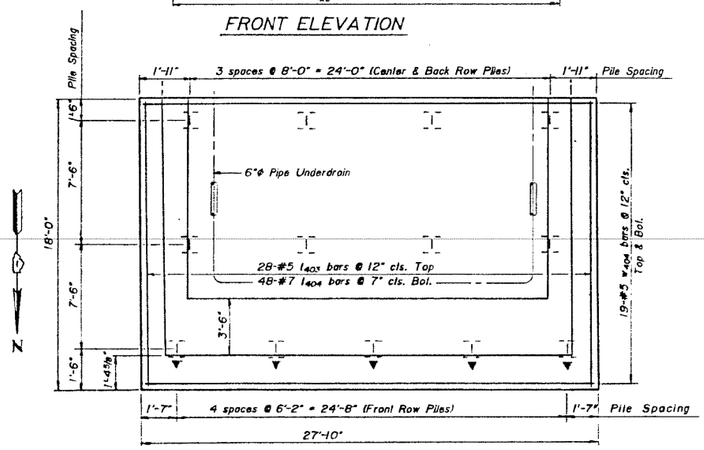

FOOTING PLAN

GENERAL NOTES

Loading - HS 20-44 and allowance of 25 pst for future wearing surface.

Bearing seat surfaces shall be constructed or adjusted to the designated elevations within a tolerance of ⅛ inch.

Installation of hatched portion of backwall is not part of this contract.

Space reinforcement in bridge seat to clear anchor bolts.

For underdrains and backfill details, see Sheet RW 30.

Bars designated (E) shall be epoxy coated.

Hatched areas to be poured after superstructure is in place. Quantities included with Superstructure.

For Anchor Bolt Details, see Sheet MD-1.

For General Plan, see Sheet GEN 3.

PILE DATA

TYPE: Steel HP 12×53
CAPACITY: 70 Ton Drive to 105 Ton Bearing
EST. LENGTH: 60 Ft.
NUMBER REQUIRED: 12 plus 1 Test Pile

F.F. = Front Face
B.F. = Back Face
E.F. = Each Face

Indicates pile battered 4" per foot.

⚠ Revision- Nov. 23, 1987

SHEET ENT 14 OF 18

REVISIONS	
Name	Date

STATE OF ILLINOIS
DEPARTMENT OF TRANSPORTATION
F.A.I. ROUTE 90/94 (DAN RYAN EXPRESSWAY)
SECTION 1985-080R COOK COUNTY
ROADWAY GRADING AND PAVING
TAYLOR ST. ENTRANCE RAMP OVER N.B. COLL. DIST.
ABUTMENT NO. 5

Scale : NONE
Date : 8-14-87

Drawn By: TB
Checked By: GSP

ENVIRODYNE ENGINEERS INC.
Chicago, Illinois

FILE NAME: pw:\AECOM-NA-AWS1.aecomonline.local:AECOM_DS02_NA\Documents\01 Americas\Transportation\60269938 Circle\Phase_II\000_CAD\008_Structural\Structural\Structure_EXRW-34\Structure_EXRW-35\Final Plans\EXRW35-62A76-SHT-003
11:33:12 AM

HBM ENGINEERING GROUP, LLC

USER NAME = hassan.issa	DESIGNED - JJS, JMI	REVISED -	STATE OF ILLINOIS DEPARTMENT OF TRANSPORTATION	EXISTING RECORD DRAWINGS	
	CHECKED - MI, MAI	REVISED -			
PLOT SCALE = N.T.S	DRAWN - JMI	REVISED -			
PLOT DATE = 1/24/2020	CHECKED - MI, MAI	REVISED -		SHEET NO. AS11-040FAS11-23 SHEETS	

F.A.I. RTE.	SECTION	COUNTY	TOTAL SHEETS	SHEET NO.
90/94/290	2015-019R	COOK	2155	1406
		CONTRACT NO. 62A76		
		ILLINOIS	FED. AID PROJECT	

FOR INFORMATION ONLY

FEDERAL AID ROUTE NO.	SECTION	COUNTY	TOTAL SHEETS	SHEET NO.
90/94	1965-080R	COOK	79	34
STA.		TO STA.		
FED. RD. DIST. NO.	ILLINOIS	FED. AID PROJECT		

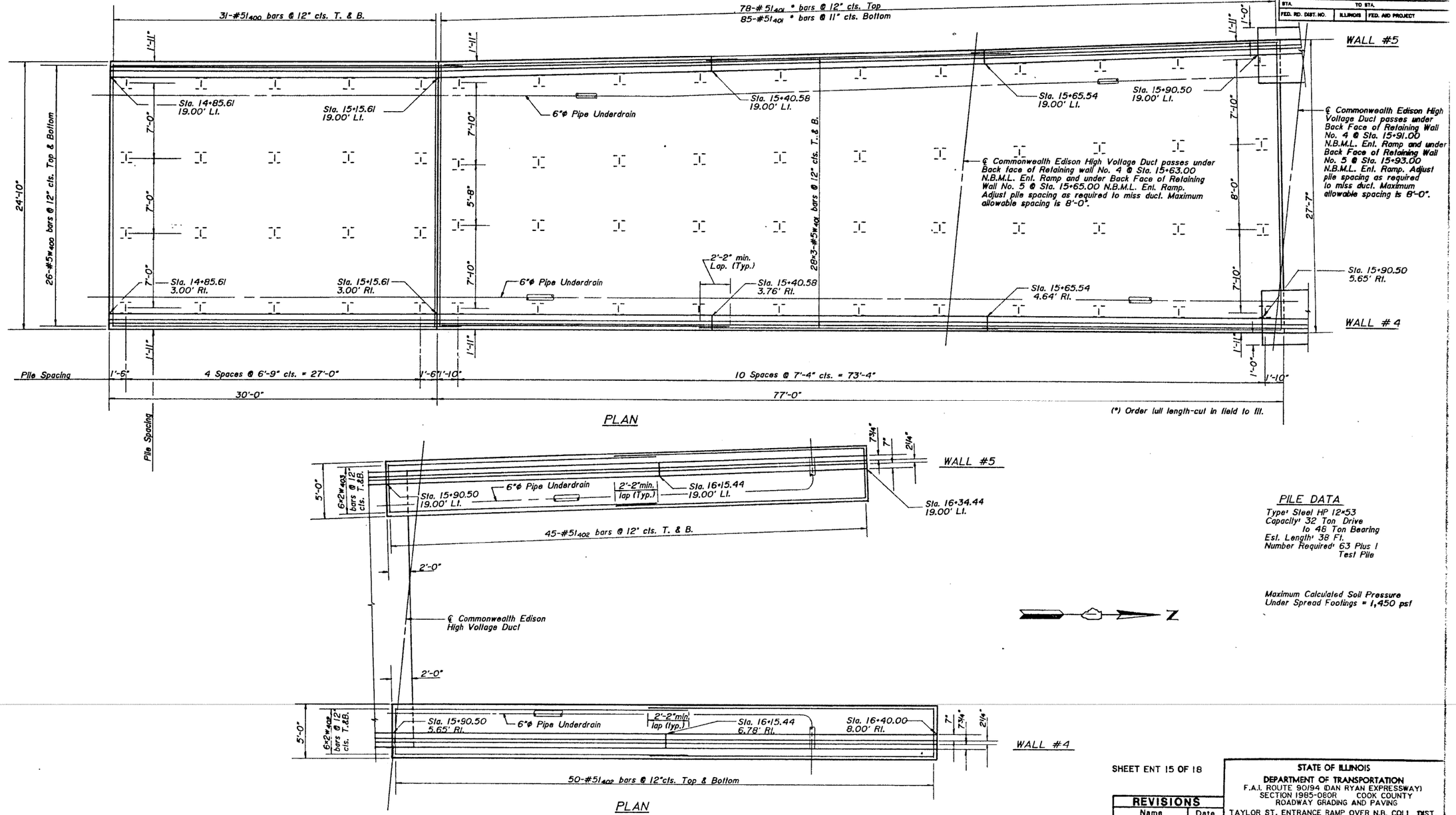

PLAN

PLAN

PILE DATA

Type: Steel HP 12×53
Capacity: 32 Ton Drive
to 48 Ton Bearing
Est. Length: 38 Ft.
Number Required: 63 Plus 1
Test Pile

Maximum Calculated Soil Pressure
Under Spread Footings = 1,450 psf

N

SHEET ENT 15 OF 18

REVISIONS	
Name	Date

STATE OF ILLINOIS
DEPARTMENT OF TRANSPORTATION
F.A.I. ROUTE 90/94 (DAN RYAN EXPRESSWAY)
SECTION 1965-080R COOK COUNTY
ROADWAY GRADING AND PAVING
TAYLOR ST. ENTRANCE RAMP OVER N.B. COLL. DIST.
RETAINING WALL Nos. 4 & 5
PLAN

Scale: NONE
Date: 8-14-87

Drawn By: PVV
Checked By: GSP

ENVIRODYNE ENGINEERS INC.
Chicago, Illinois

HBM ENGINEERING GROUP, LLC

USER NAME = hassan.issa	DESIGNED - JJS, JMI	REVISED -	STATE OF ILLINOIS DEPARTMENT OF TRANSPORTATION	EXISTING RECORD DRAWINGS
	CHECKED - MI, MAI	REVISED -		
PLOT SCALE = N.T.S	DRAWN - JMI	REVISED -		
PLOT DATE = 1/24/2020	CHECKED - MI, MAI	REVISED -		SHEET NO. AS11-050FAS11-23 SHEETS

F.A.I. RTE.	SECTION	COUNTY	TOTAL SHEETS	SHEET NO.
90/94/290	2015-019R	COOK	2155	1407
		CONTRACT NO. 62A76		
	ILLINOIS	FED. AID PROJECT		

FILE NAME: pw:\AECOM-NA-AWS1.aecomonline.local:AECOM_DS02_NA\Documents\01 Americas\Transportation\60269938 Circle\Phase_II\000_CAD\008_Structural\Structural\Structure_EXRW-34\Structure_EXRW-35\Final Plans\EXRW35-62A76-SHT-003
11:33:45 AM

FOR INFORMATION ONLY

FEDERAL AID ROUTE NO.	SECTION	COUNTY	TOTAL SHEETS	SHEET NO.
90/94	1985-060R	COOK	79	35
STA.		TO STA.		
FED. RD. DIST. NO.	ILLINOIS	FED. AID PROJECT		

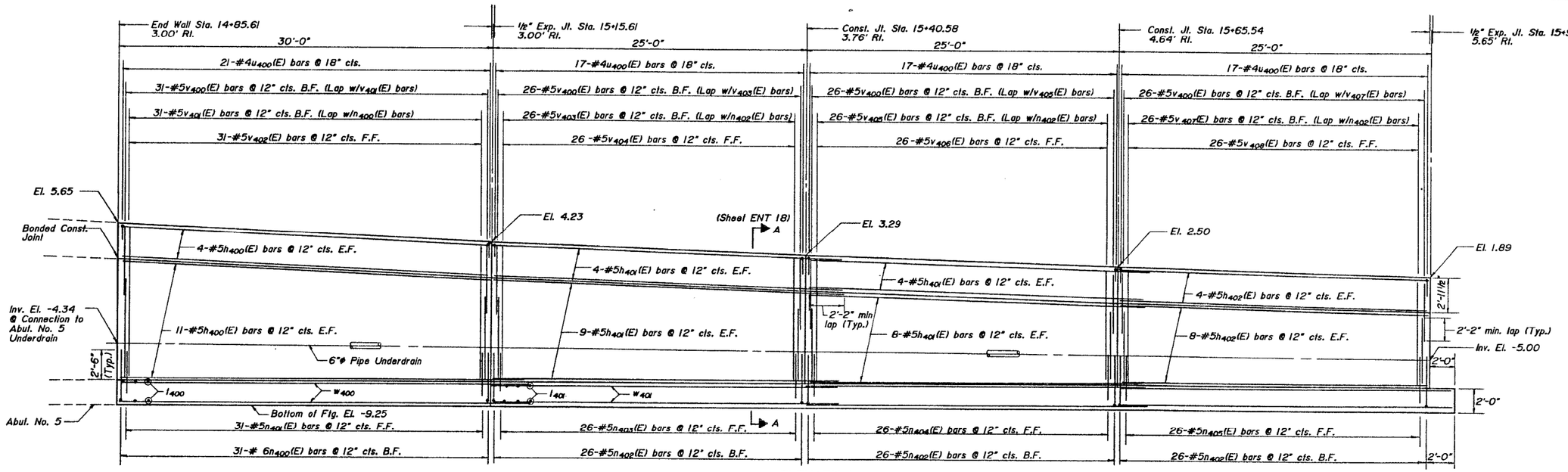

ELEVATION

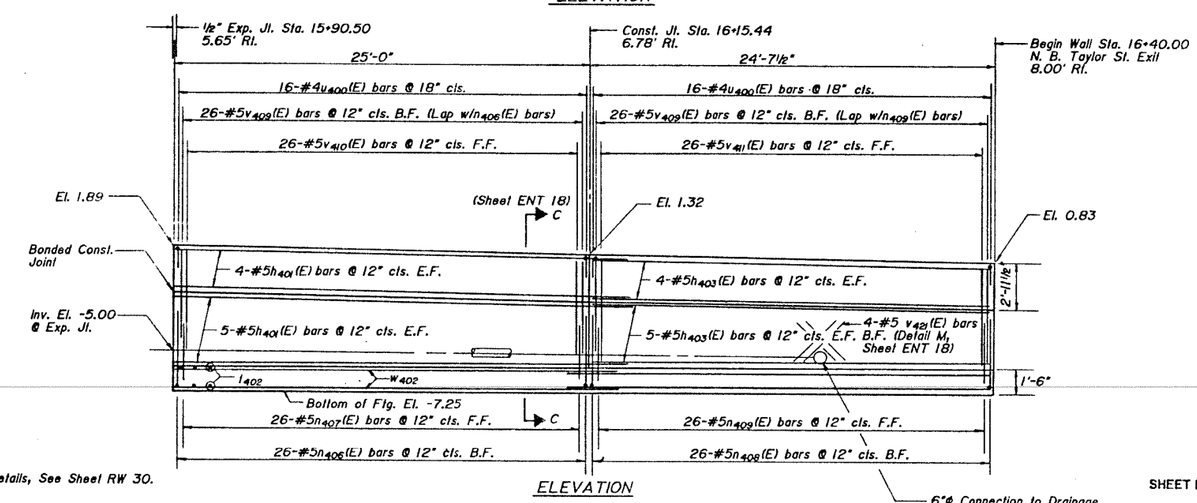

ELEVATION

NOTES:

1. For joint details, architectural finish details and elevations, underdrains and backfill details, See Sheet RW 30.
2. Refer to Alignment and Ties sheet for horizontal Alignment.
3. All longitudinal dimensions shown are measured along the Back Face of the wall.
4. Bars indicated thus: 20-3-#5 etc. indicates 20 lines of bars with 3 lengths per line.
5. Bars designated (E) shall be Epoxy Coated.
6. For General Plan, see Sheet GEN 3.
7. For General Elevation, see Sheet GEN 4.

B.F. = Back Face
F.F. = Front Face
E.F. = Each Face

SHEET ENT 16 OF 18

REVISIONS	
Name	Date

STATE OF ILLINOIS
DEPARTMENT OF TRANSPORTATION
F.A.I. ROUTE 90/94 (DAN RYAN EXPRESSWAY)
SECTION 1985-060R COOK COUNTY
ROADWAY GRADING AND PAVING
TAYLOR ST. ENTRANCE RAMP OVER N.B. COLL. DIST.
RETAINING WALL No.4
ELEVATION

Scale : NONE
Date : 6-14-87
Drawn By: PVV
Checked By: GSP

ENVIRODYNE ENGINEERS INC.
Chicago, Illinois

HBM ENGINEERING GROUP, LLC

USER NAME = hassan.issa		DESIGNED - JJS, JMI		REVISED -	
		CHECKED - MI, MAI		REVISED -	
PLOT SCALE = N.T.S		DRAWN - JMI		REVISED -	
PLOT DATE = 1/24/2020		CHECKED - MI, MAI		REVISED -	

STATE OF ILLINOIS
DEPARTMENT OF TRANSPORTATION

EXISTING RECORD DRAWINGS

SHEET NO. AS11-060FAS11-23 SHEETS

F.A.I. RTE.	SECTION	COUNTY	TOTAL SHEETS	SHEET NO.
90/94/290	2015-019R	COOK	2155	1408
		CONTRACT NO. 62A76		
		ILLINOIS	FED. AID PROJECT	

FILE NAME: pw:\\AECOM-NA-AWS1.aecomonline.local:AECOM_DS02_NA\Documents\01 Americas\Transportation\60269938 Circle\Phase_II\000_CAD\008_StructuralStructure_EXRW-34\Structure_EXRW-35\Final Plans\EXRW35-62A76-SHT-003
11:34:18 AM

FOR INFORMATION ONLY

FEDERAL AID ROUTE NO.	SECTION	COUNTY	TOTAL SHEETS	SHEET NO.
90/94	1985-080R	COOK	79	37
STA.		TO STA.		
FED. RD. DIST NO.	ILLINOIS	FED. AID PROJECT		

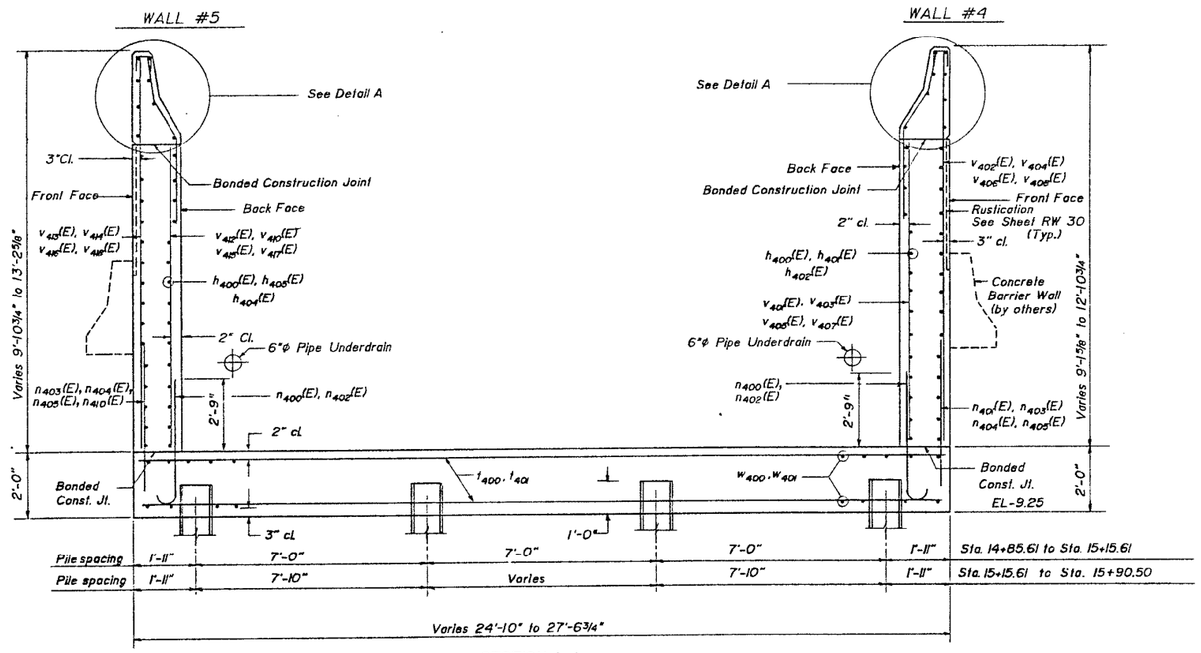

SECTION A-A

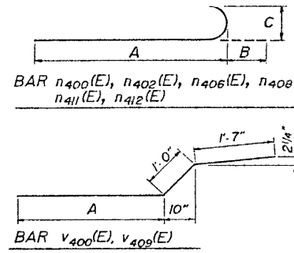

DETAIL M

RETAINING WALL NOS. 4 & 5 BILL OF MATERIAL

Bar	No.	Size	Length	Shape
$h_{403}(E)$	60	#5	29'-8"	
$h_{404}(E)$	68	#5	27'-2"	
$h_{405}(E)$	24	#5	24'-8"	
$h_{402}(E)$	18	#5	24'-3"	
$h_{406}(E)$	72	#5	27'-0"	
$h_{405}(E)$	24	#5	24'-6"	
$h_{406}(E)$	18	#5	18'-7"	
$n_{400}(E)$	62	#6	51-2"	
$n_{401}(E)$	31	#5	3'-11"	
$n_{402}(E)$	156	#5	4'-10"	
$n_{403}(E)$	52	#5	3'-5"	
$n_{404}(E)$	52	#5	3'-3"	
$n_{405}(E)$	52	#5	3'-1"	
$n_{406}(E)$	26	#5	5'-3"	
$n_{407}(E)$	26	#5	2'-9"	
$n_{408}(E)$	26	#5	4'-8"	
$n_{409}(E)$	52	#5	2'-8"	
$n_{410}(E)$	31	#5	4'-0"	
$n_{411}(E)$	26	#5	5'-9"	
$n_{412}(E)$	20	#5	5'-2"	
$n_{413}(E)$	20	#5	2'-6"	
f_{400}	62	#5	24'-6"	
f_{401}	163	#5	27'-4"	
f_{402}	190	#5	4'-8"	
$u_{400}(E)$	208	#4	2'-10"	
$v_{400}(E)$	218	#5	6'-10"	
$v_{401}(E)$	31	# 6	8'-3"	

Bar	No.	Size	Length	Shape
$v_{402}(E)$	31	#5	11'-1"	
$v_{403}(E)$	26	#5	6'-7"	
$v_{404}(E)$	26	#5	10'-2"	
$v_{405}(E)$	26	#5	5'-7"	
$v_{406}(E)$	26	#5	9'-5"	
$v_{407}(E)$	26	#5	4'-10"	
$v_{408}(E)$	26	#5	8'-9"	
$v_{409}(E)$	98	#5	6'-5"	
$v_{410}(E)$	52	#5	6'-9"	
$v_{411}(E)$	26	#5	6'-3"	
$v_{412}(E)$	31	# 6	8'-5"	
$v_{413}(E)$	31	#5	11'-5"	
$v_{414}(E)$	26	#5	10'-5"	
$v_{415}(E)$	26	#5	5'-10"	
$v_{416}(E)$	26	#5	9'-8"	
$v_{417}(E)$	26	#5	5'-0"	
$v_{418}(E)$	26	#5	9'-0"	
$v_{419}(E)$	26	#5	7'-1"	
$v_{420}(E)$	20	#5	6'-10"	
$v_{421}(E)$	8	#5	3'-0"	
w_{400}	52	#5	32'-2"	
w_{401}	168	#5	27'-0"	
w_{402}	24	#5	25'-9"	
w_{403}	24	#5	22'-10"	

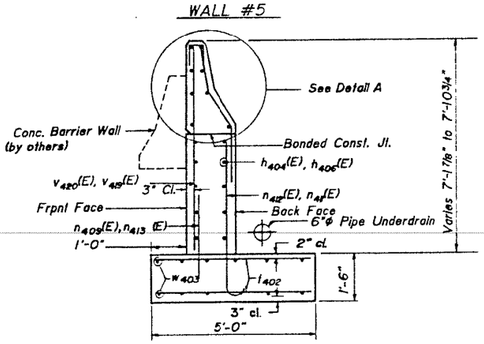

SECTION B-B

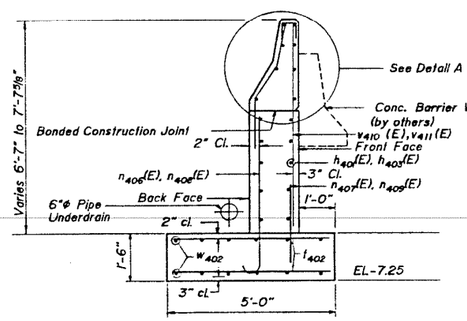

SECTION C-C

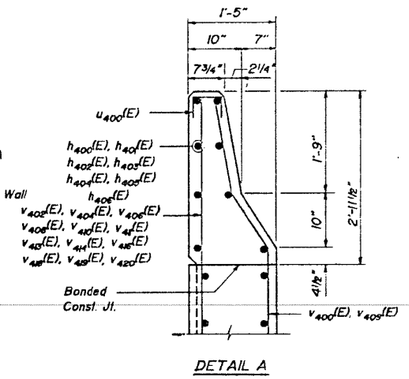

DETAIL A

Bar	A	B	C	
$n_{400}(E)$	4'-6"	8"	6"	
$n_{402}(E)$	4'-3"	7"	5"	
$n_{406}(E)$	4'-7"	7"	5"	
$n_{408}(E)$	4'-1"	7"	5"	
$n_{411}(E)$	5'-2"	7"	5"	
$n_{412}(E)$	4'-6"	7"	5"	
$v_{400}(E)$	4'-3"			
$v_{409}(E)$	3'-10"			

Item	Unit	Quantity	
Structure Excavation	Sq. Ft.	1,258	⚠
Class X Concrete	Cu. Yd.	409.2	⚠
Reinforcement Bars	Lbs.	14,850	
Reinforcement Bars Epoxy Coated	Lbs.	17,790	⚠
Steel Piles (HP 12×53)	Lin. Ft.	2,394	
Test Pile (HP 12×53)	Each	1	
Protective Coat	Sq. Yd.	112.7	⚠
Pipe Underdrain 6"ϕ	Lin. Ft.	280	⚠
Geocomposite Wall Drain	Sq. Yd.	195	
Driving Steel Piles	Lin.Ft.	2,394	

SHEET ENT 18 OF 18

REVISIONS	
Name	Date

⚠ Revision - Nov. 23, 1987

STATE OF ILLINOIS
DEPARTMENT OF TRANSPORTATION
F.A.I. ROUTE 90/94 (DAN RYAN EXPRESSWAY)
SECTION 1985-080R COOK COUNTY
ROADWAY GRADING AND PAVING
TAYLOR ST. ENTRANCE RAMP OVER N.B. COLL. DIST.
RETAINING WALL Nos. 4 & 5
SECTIONS & BILL OF MATERIALS

Scale : NONE
Date : 8-14-87
Drawn By : PVV
Checked By : GSP

ENVIRODYNE ENGINEERS INC.
Chicago, Illinois

HBM ENGINEERING GROUP, LLC

USER NAME = hassan.issa		DESIGNED - JJS, JMI		REVISED -	
		CHECKED - MI, MAI		REVISED -	
PLOT SCALE = N.T.S		DRAWN - JMI		REVISED -	
PLOT DATE = 1/24/2020		CHECKED - MI, MAI		REVISED -	

STATE OF ILLINOIS
DEPARTMENT OF TRANSPORTATION

EXISTING RECORD DRAWINGS

SHEET NO. AS11-070FAS11-23 SHEETS

F.A.I. RTE.	SECTION	COUNTY	TOTAL SHEETS	SHEET NO.
90/94/290	2015-019R	COOK	2155	1409
		CONTRACT NO. 62A76		
		ILLINOIS	FED. AID PROJECT	

FILE NAME: pw:\AECOM-NA-AWS1.aecomonline.local:AECOM_DS02_NA\Documents\01 Americas\Transportation\60269938 Circle\Phase_II\000_CAD\008_Structural\Structure_EXRW-34\Structure_EXRW-35\Final Plans\EXRW35-62A76-SHT-003
11:34:51 AM

FOR INFORMATION ONLY

INDEX OF VOLUMES

VOL. NO	DESCRIPTION	NO. OF SHEETS
1.	ROADWAY PLANS & GENERAL SHEETS	151
2.	MAINTENANCE OF TRAFFIC & ROADWAY CROSS SECTIONS	81
3.	BRIDGES & ASSOCIATED STRUCTURES	79
4.	RETAINING WALLS AND MISC. STRUCTURES	38
5	ROADWAY LIGHTING & SURVEILLANCE	36
	TOTAL	386

STATE OF ILLINOIS
DEPARTMENT OF TRANSPORTATION
DIVISION OF HIGHWAYS

PLANS FOR PROPOSED FEDERAL AID INTERSTATE HIGHWAY

SCALES: PLAN 1 INCH = 50 FEET; PROFILE HORIZ. 1 INCH = 50 FEET; PROFILE VERT. 1 INCH = 5 FEET; CROSS SECTIONS 1 INCH = 10 FEET HORIZONTAL, 1 INCH = 5 FEET VERTICAL

VOLUME NO. 4

F.A.I. ROUTE 90/94 (DAN RYAN EXPRESSWAY)

SECTION 1985 - 080 R

~~PROJECT~~

COOK COUNTY

C-91-433-85

ROADWAY GRADING AND PAVING
MAXWELL STREET TO I-290

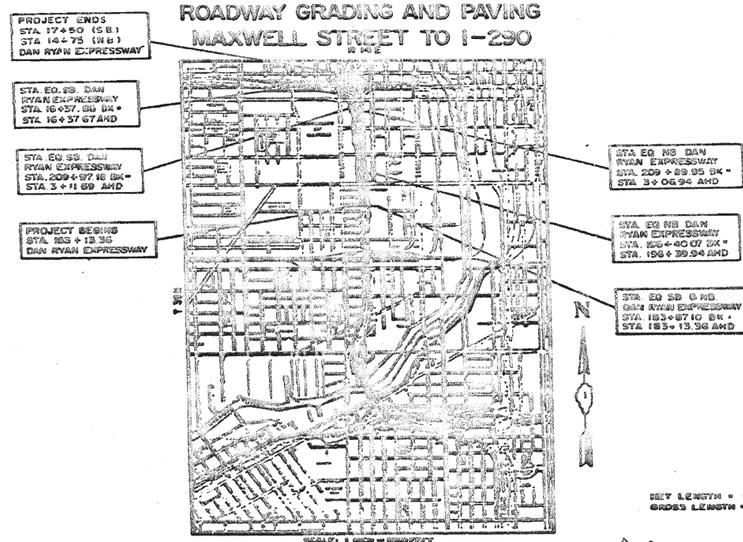

DESIGN DESIGNATION

DAN RYAN EXPRESSWAY (MAINLINE S B & N.B.) 163,700 (2000) TRUNK 118 41 (13" CRPCC - 20)

COLLECTOR-DISTRIBUTOR (S.B. & N.B.) 28,100 (2000) COLLECTOR 2163 (13" CRPCC - 20)

N.B. ROOSEVELT RD / RUBLE ST
S.B. ROOSEVELT RD / UNION AVE
N.B. TAYLOR ST ENTRANCE RAMP } 19,300 (2000) AREA SERVICE 1608 (12" PCC - 20)

TAYLOR ST MAINLINE EXIT AND RAMP W S } 7,700 (2000) AREA SERVICE 467 (10" PCC - 20)

100' 200' 300' 1" = 100'
50' 100' 150' 1" = 50'
50' 100' 150' 1" = 40'
50' 100' 150' 1" = 30'
100' 200' 300' 1" = 20'

FULL SIZE PLANS HAVE BEEN PREPARED USING STANDARD ENGINEERING SCALES. REDUCED SIZED PLANS WILL NOT CONFORM TO STANDARD SCALES, IN MAKING MEASUREMENTS ON REDUCED PLANS, THE ABOVE SCALES MAY BE USED.

CONTRACT NO. 80063

COUNTY COOK SECTION 1985 - 080 R ROUTE I 90/94 (DAN RYAN EXPRESSWAY)

F.A. RTE.	SECTION	COUNTY	TOTAL SHEETS	SHEET NO.
90/94	2015-019R	COOK	38	1
		CONTRACT NO. 62A76		
		ILLINOIS FED. AID PROJECT		

"1985 - 080 R
P-91 179-84

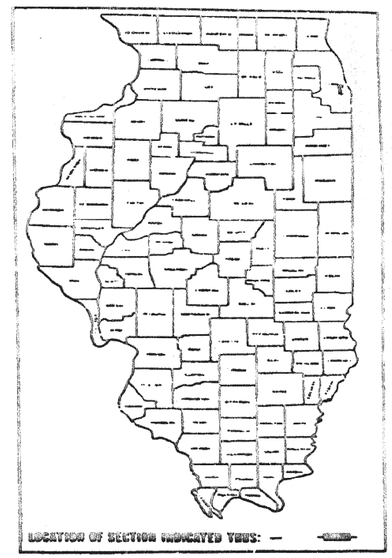

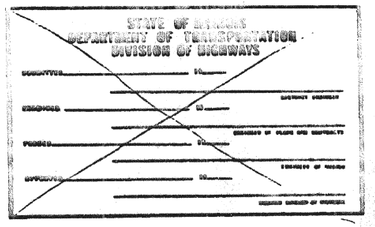

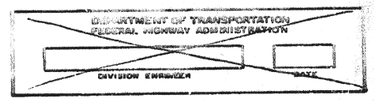

SHEET GEN 1 OF 5

NET LENGTH = 4,122.32 LIN. FT. (0.78 MILES)
GROSS LENGTH = 4,122.32 LIN. FT. (0.78 MILES)

CONSULTANT SECTION ENGINEER: K. MENASTREET / J. KOS SIZE 703 - 4258

FILE NAME: pw:\AECOM-NA-AWS1.aecomonline.local:AECOM_DS02_NA\Documents\01 Americas\Transportation\60269938 Circle\Phase_II\000_CAD\008_Structural\Structural\Structure_EXRW-34\Structure_EXRW-35\Final Plans\EXRW35-62A76-SHT-003

11:35:25 AM

HBM ENGINEERING GROUP, LLC

USER NAME = hassan.issa	DESIGNED - JJS, JMI	REVISED -	STATE OF ILLINOIS DEPARTMENT OF TRANSPORTATION	EXISTING RECORD DRAWINGS	
	CHECKED - MI, MAI	REVISED -			
PLOT SCALE = N.T.S	DRAWN - JMI	REVISED -			
PLOT DATE = 1/24/2020	CHECKED - MI, MAI	REVISED -		SHEET NO. AS11-080FAS11-23 SHEETS	

FOR INFORMATION ONLY

TBM #7 "D" N.E. Wingwall Roosevelt Rd. over Dan Ryan Exp. @ Rubio St. El. 17.930

TBM #8 "D" N.E. Wingwall Taylor St. over Dan Ryan Exp. El. 17.032

TBM #25 S.E. Flange Bolt of Hydrant @ S.W. corner Harrison St. over N.B. Dan Ryan Exp. El. 18.565

TBM #62 "D" N.W. Abutment Wall Polk St. over Dan Ryan Exp. El. 16.404

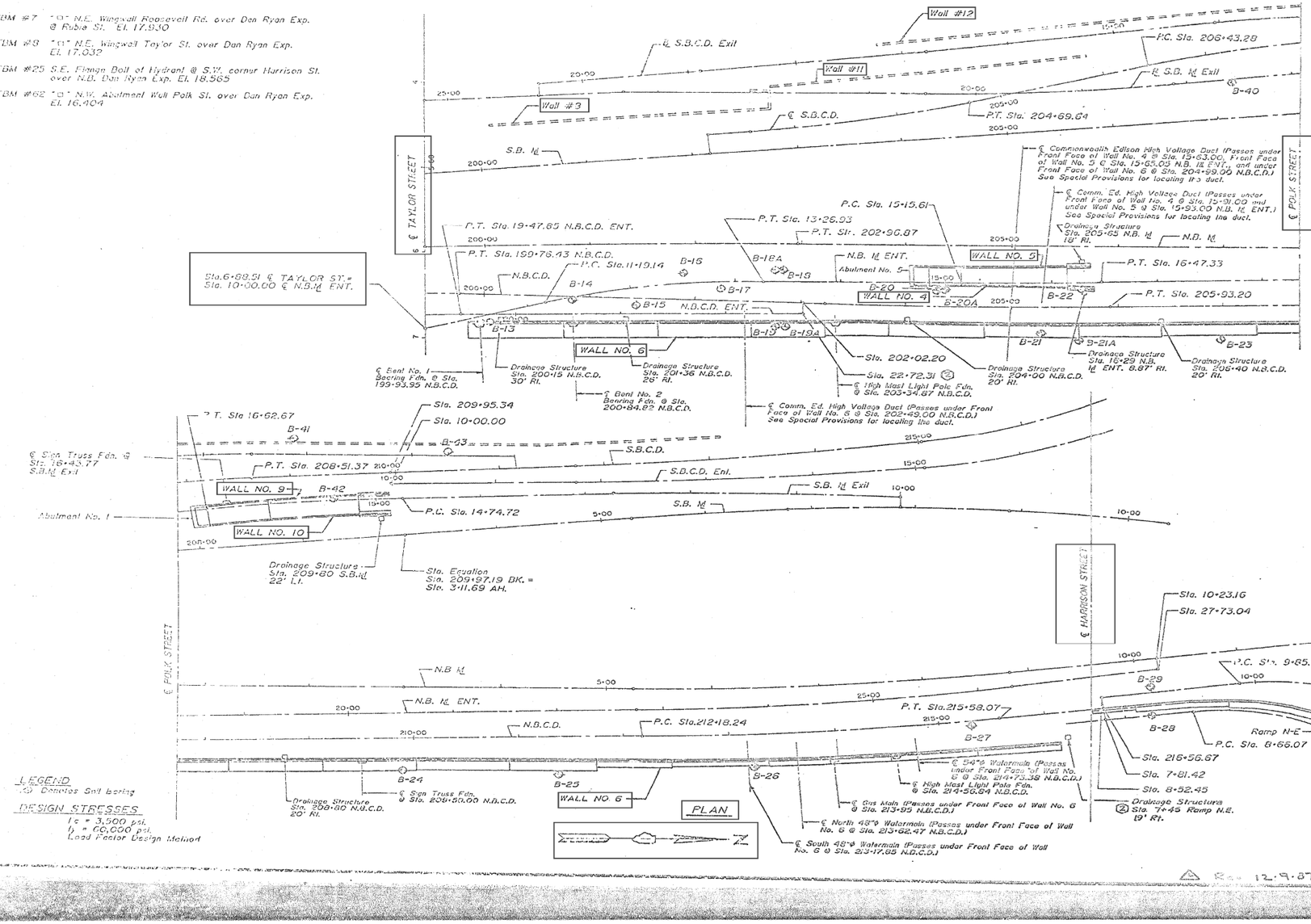

ROUTE	SECTION	COUNTY	TOTAL SHEETS	SHEET NO.
90/94	1005-6060	COOK	36	3
F.A.I.				
FED. RD. DIST. NO.	ILLINOIS	FED. AID PROJECT		

GENERAL NOTES

Reinforcement Bars shall conform to the requirements of AASHTO M-31, M-42, or M-53, Grade 60.

(2)

When artificial lighting is utilized in night operations, the contractor shall exercise the utmost precaution in preventing adverse visibility to the motoring public as well as the adjoining residential areas.

Elevations shown on the plans are based on Chicago City Datum.

The contractor shall obtain all necessary permits from the City of Chicago and any other agencies as required prior to commencing construction.

For soil boring logs see Geotechnical Study for the Dan Ryan Expressway prepared by the Claude H. Hurley Co., dated March 8, 1985.

Nonmetallic water seal used at expansion joints shall extend from the top of the upper footing to within 6" of the top of wall.

The contractor shall drive one (1) Steel Test Pile (HP 10*42), seven (7) Steel Test Piles (HP 12*53) and four (4) Steel Test Piles (HP 12*74) in permanent locations, one (HP 12*53) at Retaining Wall No.'s 4 & 5, one (HP 12*53) at Abutment No. 5, one (HP 12*53) and 4 (HP 12*74) at Retaining Wall No. 6, one (HP 10*42) and one (HP 12*53) at Retaining Wall No. 7, one (HP 12*53) at Retaining Wall No.'s 9 & 10, and one (HP 12*53) at Abutment No. 1 as directed by the engineer before ordering the remainder of piles.

(3) For architectural finish (Rustication) details and limits, see sheet RW-30.

SPECIFICATIONS

1. Standard Specifications for Road and Bridge Construction Adopted October 1, 1983 by The State of Illinois, Department of Transportation, and Supplements.
2. Standard Specifications For Highway Bridges, AASHTO 1983 with 1984, 1985 and 1986 Interims.

STATE OF ILLINOIS HENRY ECALE 2487 REGISTERED PROFESSIONAL ENGINEER

Signed Henry Ecale Date 6 Sept 87
Henry Ecale, SE, ILL. Reg. No. 2487

APPROVED FOR THE DEPARTMENT
General Engineer

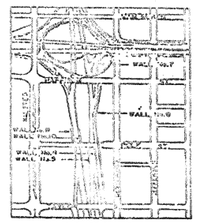

LOCATION PLAN

SHEET GEN 3 OF 5

REVISIONS		
No.	Name	Date
(1)	Revision	10-8-87
(2)	Revision	12-7-87

Date: 8-14-87 Checked by: GSP

ENVIRODYNE ENGINEERS INC.

STATE OF ILLINOIS
DEPARTMENT OF TRANSPORTATION
F.A.I. ROUTE 0090 (DAN RYAN EXPRESSWAY)
SECTION 1005-6060R COOK COUNTY
ROADWAY GRADING AND PAVING

RETAINING WALL NOS. 4,5,6,7,9 & 10
GENERAL PLAN

HBM ENGINEERING GROUP, LLC	USER NAME = hassan.issa	DESIGNED - JJS, JMI	REVISED -	
		CHECKED - MI, MAI	REVISED -	
	PLOT SCALE = N.T.S	DRAWN - JMI	REVISED -	
	PLOT DATE = 1/24/2020	CHECKED - MI, MAI	REVISED -	

STATE OF ILLINOIS
DEPARTMENT OF TRANSPORTATION

EXISTING RECORD DRAWINGS

SHEET NO. AS11-090FAS11-23 SHEETS

F.A.I. RTE.	SECTION	COUNTY	TOTAL SHEETS	SHEET NO.
90/94/290	2015-019R	COOK	2155	1411
		CONTRACT NO. 62A76		
		ILLINOIS	FED. AID PROJECT	

FILE NAME: pw:\\AECOM-NA-AWS1.aecomnline.local:AECOM_D502_NAIDocuments\01 Americas\Transportation\60269938 CirclePhase_II\000_CAD\008_StructuralStructure_EXRW-34\Structure_EXRW-35\Final Plans\EXRW35-62A76-SHT-003

11:36:19 AM

FOR INFORMATION ONLY

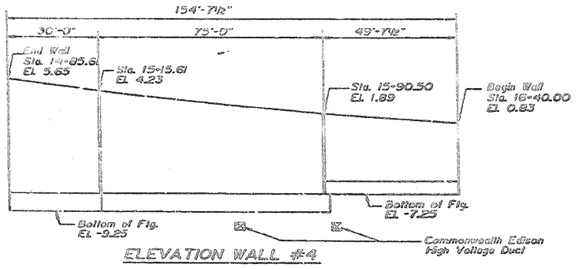

ELEVATION WALL #4

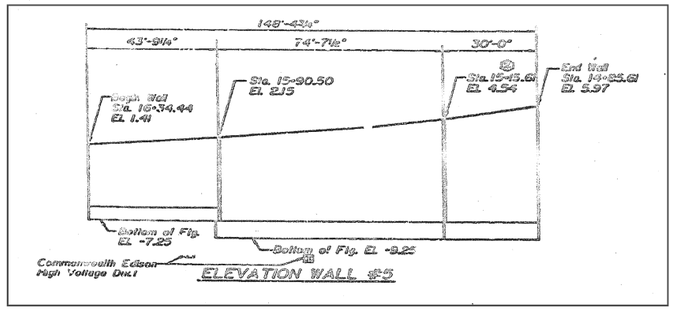

ELEVATION WALL #5

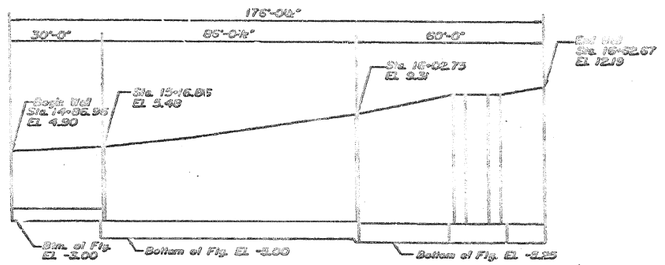

ELEVATION WALL #9

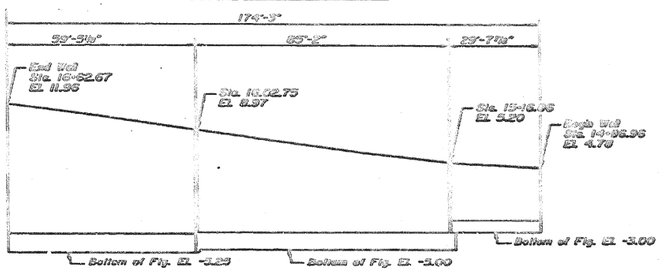

ELEVATION WALL #10

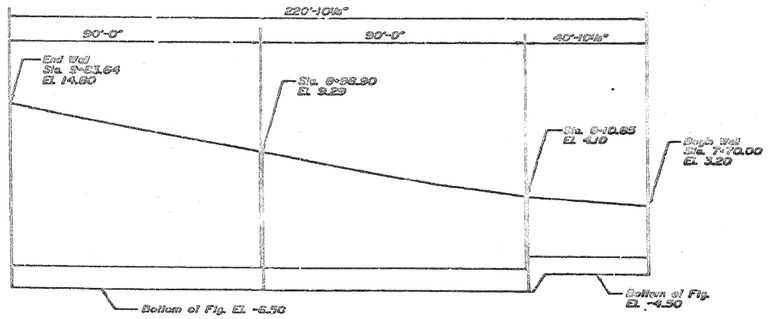

ELEVATION WALL # 7

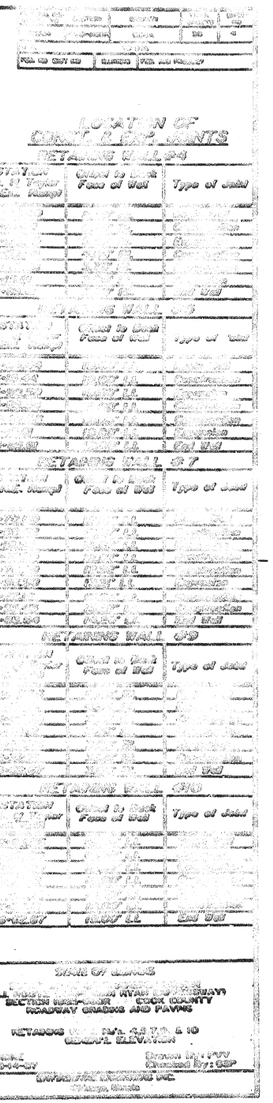

HBM ENGINEERING GROUP, LLC	USER NAME = hassan.issa	DESIGNED - JJS, JMI	REVISED -	STATE OF ILLINOIS DEPARTMENT OF TRANSPORTATION	EXISTING RECORD DRAWINGS	F.A.I. RTE.	SECTION	COUNTY	TOTAL SHEETS	SHEET NO.
		CHECKED - MI, MAI	REVISED -			90/94/290	2015-019R	COOK	2155	1412
	PLOT SCALE = N.T.S	DRAWN - JMI	REVISED -					CONTRACT NO. 62A76		
	PLOT DATE = 1/24/2020	CHECKED - MI, MAI	REVISED -		SHEET NO. AS11-100FAS11-23 SHEETS			ILLINOIS	FED. AID PROJECT	

FILE NAME: pw:\\AECOM-NA-AWS1.aecomonline.local:AECOM_DS02_NAIDocuments\01 Americas\Transportation\60269938 Circle\Phase_II\000_CAD\008_StructuralStructure_EXRW-34\Structure_EXRW-35\Final Plans\EXRW35-62A76-SHT-003

11:37:10 AM

FOR INFORMATION ONLY

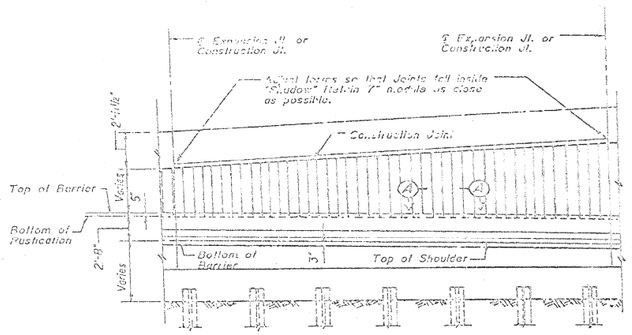

ELEVATION - TYPICAL ARCHITECTURAL FINISH

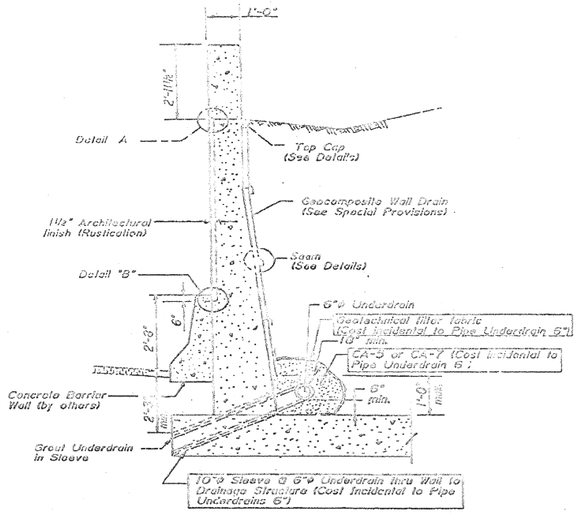

TYPICAL SECTION THRU RETAINING WALL

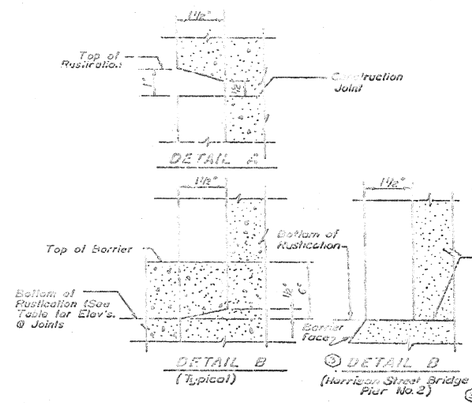

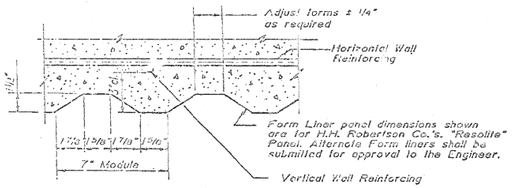

SECTION A-A

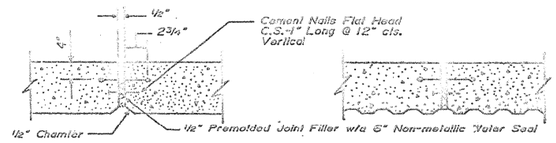

EXPANSION JOINT DETAIL

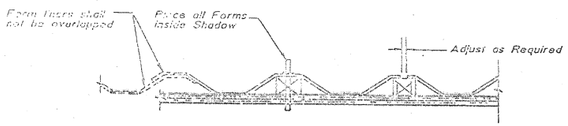

SUGGESTED FORMWORK DETAIL

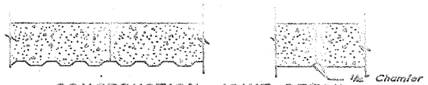

CONSTRUCTION JOINT DETAIL

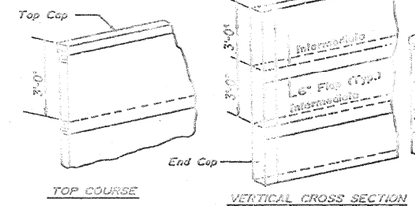

TOP COURSE

VERTICAL CROSS SECTION

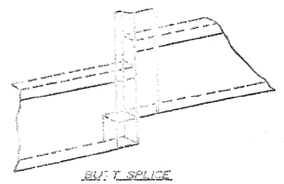

BUT T SPLICE

GEOCOMPOSITE WALL DRAIN DETAILS

BOTTOM OF RUSTICATION ELEVATIONS

WALL #4

STATION (WALL RUNNING)	ELEVATION
13+90.00	+.08
13+96.61	-1.06
14+00.00	-1.46
14+65.61	-5.89
14+65.61	-5.93

WALL #5

STATION (WALL RUNNING)	ELEVATION
13+90.00	+.08
13+96.61	-1.06
14+00.00	-1.46
14+65.61	-5.89
14+65.61	-5.93

WALL #6

STATION (E.M.C.D.)	ELEVATION
14+00.00	-1.46
14+07.01	-2.40
14+10.00	-2.81
14+14.01	-3.37
14+21.95	-4.36
14+23.94	-4.62
14+27.92	-5.13
14+29.90	-5.38
14+29.89	-5.39
14+34.04	-5.93
14+35.02	-6.18
14+37.04	-6.43
14+39.00	-6.67
14+41.00	-6.87
14+43.00	-7.03
14+45.00	-7.13
14+47.00	-7.18
14+49.00	-7.18
14+51.00	-7.13
14+53.00	-7.03
14+55.00	-6.87
14+57.00	-6.67
14+59.00	-6.43
14+61.00	-6.18
14+63.00	-5.93
14+65.00	-5.67
14+67.00	-5.37
14+69.00	-5.03
14+71.00	-4.64
14+73.00	-4.21
14+75.00	-3.74
14+77.00	-3.23
14+79.00	-2.68
14+81.00	-2.09
14+83.00	-1.46
14+85.00	-.79
14+87.00	-.08
14+89.00	+.67
14+91.00	+1.50
14+93.00	+2.37
14+95.00	+3.29
14+97.00	+4.25
14+99.00	+5.26
15+01.00	+6.32
15+03.00	+7.43
15+05.00	+8.58
15+07.00	+9.78
15+09.00	+11.03
15+11.00	+12.32
15+13.00	+13.66
15+15.00	+15.05
15+17.00	+16.48
15+19.00	+17.96
15+21.00	+19.48
15+23.00	+21.05
15+25.00	+22.67
15+27.00	+24.33
15+29.00	+26.03
15+31.00	+27.78
15+33.00	+29.57
15+35.00	+31.41
15+37.00	+33.29
15+39.00	+35.21
15+41.00	+37.17
15+43.00	+39.18
15+45.00	+41.23
15+47.00	+43.32
15+49.00	+45.46
15+51.00	+47.64
15+53.00	+49.87
15+55.00	+52.14
15+57.00	+54.45
15+59.00	+56.81
15+61.00	+59.21
15+63.00	+61.66
15+65.00	+64.15
15+67.00	+66.68
15+69.00	+69.26
15+71.00	+71.88
15+73.00	+74.54
15+75.00	+77.25
15+77.00	+80.00
15+79.00	+82.80
15+81.00	+85.64
15+83.00	+88.52
15+85.00	+91.45
15+87.00	+94.42
15+89.00	+97.43
15+91.00	+100.49
15+93.00	+103.59
15+95.00	+106.73
15+97.00	+109.92
15+99.00	+113.15
16+01.00	+116.43
16+03.00	+119.75
16+05.00	+123.11
16+07.00	+126.52
16+09.00	+129.98
16+11.00	+133.48
16+13.00	+137.02
16+15.00	+140.61
16+17.00	+144.24
16+19.00	+147.92
16+21.00	+151.64
16+23.00	+155.40
16+25.00	+159.21
16+27.00	+163.06
16+29.00	+166.96
16+31.00	+170.90
16+33.00	+174.88
16+35.00	+178.91
16+37.00	+182.98
16+39.00	+187.09
16+41.00	+191.25
16+43.00	+195.45
16+45.00	+199.70
16+47.00	+203.99
16+49.00	+208.32
16+51.00	+212.70
16+53.00	+217.12
16+55.00	+221.58
16+57.00	+226.09
16+59.00	+230.64
16+61.00	+235.23
16+63.00	+239.87
16+65.00	+244.55
16+67.00	+249.28
16+69.00	+254.05
16+71.00	+258.86
16+73.00	+263.72
16+75.00	+268.62
16+77.00	+273.57
16+79.00	+278.56
16+81.00	+283.59
16+83.00	+288.67
16+85.00	+293.79
16+87.00	+298.95
16+89.00	+304.16
16+91.00	+309.42
16+93.00	+314.72
16+95.00	+320.06
16+97.00	+325.45
16+99.00	+330.88
17+01.00	+336.36
17+03.00	+341.88
17+05.00	+347.44
17+07.00	+353.05
17+09.00	+358.71
17+11.00	+364.41
17+13.00	+370.15
17+15.00	+375.94
17+17.00	+381.78
17+19.00	+387.65
17+21.00	+393.58
17+23.00	+399.54
17+25.00	+405.55
17+27.00	+411.61
17+29.00	+417.71
17+31.00	+423.85
17+33.00	+430.04
17+35.00	+436.28
17+37.00	+442.56
17+39.00	+448.88
17+41.00	+455.25
17+43.00	+461.67
17+45.00	+468.13
17+47.00	+474.63
17+49.00	+481.18
17+51.00	+487.78
17+53.00	+494.42
17+55.00	+501.11
17+57.00	+507.84
17+59.00	+514.62
18+01.00	+521.44
18+03.00	+528.31
18+05.00	+535.23
18+07.00	+542.19
18+09.00	+549.20
18+11.00	+556.25
18+13.00	+563.35
18+15.00	+570.50
18+17.00	+577.69
18+19.00	+584.93
18+21.00	+592.21
18+23.00	+599.54
18+25.00	+606.92
18+27.00	+614.34
18+29.00	+621.81
18+31.00	+629.32
18+33.00	+636.88
18+35.00	+644.49
18+37.00	+652.14
18+39.00	+659.84
18+41.00	+667.58
18+43.00	+675.37
18+45.00	+683.21
18+47.00	+691.09
18+49.00	+699.02
18+51.00	+707.00
18+53.00	+715.02
18+55.00	+723.09
18+57.00	+731.21
18+59.00	+739.37
19+01.00	+747.58
19+03.00	+755.84
19+05.00	+764.14
19+07.00	+772.49
19+09.00	+780.89
19+11.00	+789.33
19+13.00	+797.82
19+15.00	+806.36
19+17.00	+814.94
19+19.00	+823.57
19+21.00	+832.25
19+23.00	+840.97
19+25.00	+849.74
19+27.00	+858.56
19+29.00	+867.42
19+31.00	+876.33
19+33.00	+885.29
19+35.00	+894.29
19+37.00	+903.34
19+39.00	+912.44
19+41.00	+921.58
19+43.00	+930.77
19+45.00	+940.01
19+47.00	+949.29
19+49.00	+958.62
19+51.00	+968.00
19+53.00	+977.42
19+55.00	+986.89
19+57.00	+996.41
19+59.00	+1005.97
20+01.00	+1015.58
20+03.00	+1025.24
20+05.00	+1034.94
20+07.00	+1044.69
20+09.00	+1054.49
20+11.00	+1064.33
20+13.00	+1074.22
20+15.00	+1084.16
20+17.00	+1094.14
20+19.00	+1104.17
20+21.00	+1114.24
20+23.00	+1124.36
20+25.00	+1134.53
20+27.00	+1144.74
20+29.00	+1155.00
20+31.00	+1165.30
20+33.00	+1175.65
20+35.00	+1186.05
20+37.00	+1196.49
20+39.00	+1206.98
20+41.00	+1217.52
20+43.00	+1228.10
20+45.00	+1238.73
20+47.00	+1249.41
20+49.00	+1260.13
20+51.00	+1270.90
20+53.00	+1281.72
20+55.00	+1292.58
20+57.00	+1303.49
20+59.00	+1314.45
21+01.00	+1325.45
21+03.00	+1336.50
21+05.00	+1347.60
21+07.00	+1358.74
21+09.00	+1369.93
21+11.00	+1381.17
21+13.00	+1392.45
21+15.00	+1403.78
21+17.00	+1415.16
21+19.00	+1426.58
21+21.00	+1438.05
21+23.00	+1449.57
21+25.00	+1461.13
21+27.00	+1472.74
21+29.00	+1484.40
21+31.00	+1496.10
21+33.00	+1507.85
21+35.00	+1519.65
21+37.00	+1531.49
21+39.00	+1543.38
21+41.00	+1555.32
21+43.00	+1567.30
21+45.00	+1579.33
21+47.00	+1591.41
21+49.00	+1603.53
21+51.00	+1615.70
21+53.00	+1627.92
21+55.00	+1640.18
21+57.00	+1652.49
21+59.00	+1664.85
22+01.00	+1677.25
22+03.00	+1689.70
22+05.00	+1702.20
22+07.00	+1714.74
22+09.00	+1727.33
22+11.00	+1739.97
22+13.00	+1752.65
22+15.00	+1765.38
22+17.00	+1778.16
22+19.00	+1790.98
22+21.00	+1803.85
22+23.00	+1816.77
22+25.00	+1829.73
22+27.00	+1842.74
22+29.00	+1855.80
22+31.00	+1868.90
22+33.00	+1882.05
22+35.00	+1895.25
22+37.00	+1908.49
22+39.00	+1921.78
22+41.00	+1935.12
22+43.00	+1948.50
22+45.00	+1961.93
22+47.00	+1975.41
22+49.00	+1988.93
22+51.00	+2002.50
22+53.00	+2016.12
22+55.00	+2029.78
22+57.00	+2043.49
22+59.00	+2057.25
23+01.00	+2071.05
23+03.00	+2084.90
23+05.00	+2098.80
23+07.00	+2112.74
23+09.00	+2126.73
23+11.00	+2140.77
23+13.00	+2154.85
23+15.00	+2168.98
23+17.00	+2183.16
23+19.00	+2197.38
23+21.00	+2211.65
23+23.00	+2225.97
23+25.00	+2240.33
23+27.00	+2254.74
23+29.00	+2269.20
23+31.00	+2283.70
23+33.00	+2298.25
23+35.00	+2312.85
23+37.00	+2327.49
23+39.00	+2342.18
23+41.00	+2356.92
23+43.00	+2371.70
23+45.00	+2386.53
23+47.00	+2401.41
23+49.00	+2416.33
23+51.00	+2431.30
23+53.00	+2446.32
23+55.00	+2461.38
23+57.00	+2476.49
23+59.00	+2491.65
24+01.00	+2506.85
24+03.00	+2522.10
24+05.00	+2537.40
24+07.00	+2552.74
24+09.00	+2568.13
24+11.00	+2583.57
24+13.00	+2599.05
24+15.00	+2614.58
24+17.00	+2630.16
24+19.00	+2645.78
24+21.00	+2661.45
24+23.00	+2677.17
24+25.00	+2692.93
24+27.00	+2708.74
24+29.00	+2724.60
24+31.00	+2740.50
24+33.00	+2756.45
24+35.00	+2772.45
24+37.00	+2788.49
24+39.00	+2804.58
24+41.00	+2820.72
24+43.00	+2836.90
24+45.00	+2853.13
24+47.00	+2869.41
24+49.00	+2885.73
24+51.00	+2902.10
24+53.00	+2918.52
24+55.00	+2934.98
24+57.00	+2951.49
24+59.00	+2968.05
25+01.00	+2984.65
25+03.00	+3001.30
25+05.00	+3018.00
25+07.00	+3034.74
25+09.00	+3051.53
25+11.00	+3068.37
25+13.00	+3085.25
25+15.00	+3102.18
25+17.00	+3119.16
25+19.00	+3136.18
25+21.00	+3153.25
25+23.00	+3170.37
25+25.00	+3187.53
25+27.00	+3204.74
25+29.00	+3222.00
25+31.00	+3239.30
25+33.00	+3256.65
25+35.00	+3274.05
25+37.00	+3291.49
25+39.00	+3308.98
25+41.00	+3326.52
25+43.00	+3344.10
25+45.00	+3361.73
25+47.00	+3379.41
25+49.00	+3397.13
25+51.00	+3414.90
25+53.00	+3432.72
25+55.00	+3450.58
25+57.00	+3468.49
25+59.00	+3486.45
26+01.00	+3504.45
26+03.00	+3522.50
26+05.00	+3540.60
26+07.00	+3558.74
26+09.00	+3576.93
26+11.00	+3595.17
26+13.00	+3613.45
26+15.00	+3631.78
26+17.00	+3650.16
26+19.00	+3668.58
26+21.00	+3687.05
26+23.00	+3705.57
26+25.00	+3724.13
26+27.00	+3742.74
26+29.00	+3761.40
26+31.00	+3780.10
26+33.00	+3798.85
26+35.00	+3817.65
26+37.00	+3836.49
26+39.00	+3855.38
26+41.00	+3874.32
26+43.00	+3893.30
26+45.00	+3912.33
26+47.00	+3931.41
26+49.00	+3950.53
26+51.00	+3969.70
26+53.00	+3988.92
26+55.00	+4008.18
26+57.00	+4027.49
26+59.00	+4046.85
27+01.00	+4066.25
27+03.00	+4085.70
27+05.00	+4105.20
27+07.00	+4124.74
27+09.00	+4144.33
27+11.00	+4163.97
27+13.00	+4183.65
27+15.00	+4203.38
27+17.00	+4223.16
27+19.00	+4242.98
27+21.00	+4262.85
27+23.00	+4282.77
27+25.00	+4302.73
27+27.00	+4322.74
27+29.00	+4342.80
27+31.00	+4362.90
27+33.00	+4383.05
27+35.00	+4403.25
27+37.00	+4423.49
27+39.00	+4443.78
27+41.00	+4464.12
27+43.00	+4484.50
27+45.00	+4504.93
27+47.00	+4525.41
27+49.00	+4545.93
27+51.00	+4566.50
27+53.00	+4587.12
27+55.00	+4607.78
27+57.00	+4628.49
27+59.00	+4649.25
28+01.00	+4670.05
28+03.00	+4690.90
28+05.00	+4711.80
28+07.00	+4732.74
28+09.00	+4753.73
28+11.00	+4774.77
28+13.00	+4795.85
28+15.00	+4816.98
28+17.00	+4838.16
28+19.00	+4859.38
28+21.00	+4880.65
28+23.00	+4901.97
28+25.00	+4923.33
28+27.00	+4944.74
28+29.00	+4966.20
28+31.00	+4987.70
28+33.00	+5009.25
28+35.00	+5030.85
28+37.00	+5052.49
28+39.00	+5074.18
28+41.00	+5095.92
28+43.00	+5117.70
28+45.00	+5139.53
28+47.00	+5161.41
28+49.00	+5183.33
28+51.00	+5205.30
28+53.00	+5227.32
28+55.00	+5249.38
28+57.00	+5271.49
28+59.00	+5293.65
29+01.00	+5315.85
29+03.00	+5338.10
29+05.00	+5360.40
29+07.00	+5382.74
29+09.00	+5405.13
29+11.00	+5427.57
29+13.00	+5450.05
29+15.00	+5472.58
29+17.00	+5495.16
29+19.00	+5517.78
29+21.00	+5540.45
29+23.00	+5563.17
29+25.00	+5585.93
29+27.00	+5608.74
29+29.00	+5631.60
29+31.00	+5654.50
29+33.00	+5677.45
29+35.00	+5700.45
29+37.00	+5723.49
29+39.00	+5746.58
29+41.00	+5769.72
29+43.00	+5792.90
29+45.00	+5816.13
29+47.00	+5839.41
29+49.00	+5862.73
29+51.00	+5886.10
29+53.00	+5909.52
29+55.00	+5932.98
29+57.00	+5956.49
29+59.00	+5980.05
30+01.00	+6003.65
30+03.00	+6027.30
30+05.00	+6051.00
30+07.00	+6074.74
30+09.00	+6098.53
30+11.00	+6122.37
30+13.00	+6146.25
30+15.00	+6170.18
30+17.00	+6194.16
30+19.00	+6218.18
30+21.00	+6242.25
30+23.00	+6266.37
30+25.00	+6290.53
30+27.00	+6314.74
30+29.00	+6339.00
30+31.00	+6363.30
30+33.00	+6387.65
30+35.00	+6412.05
30+37.00	+6436.49
30+39.00	+6460.98
30+41.00	+6485.52
30+43.00	+6510.10
30+45.00	+6534.73
30+47.00	+6559.41
30+49.00	+6584.13
30+51.00	+6608.90
30+53.00	+6633.72
30+55.00	+6658.58
30+57.00	+6683.49
30+59.00	+6708.45
31+01.00	+6733.45
31+03.00	+6758.50
31+05.00	+6783.60
31+07.00	+6808.74
31+09.00	+6833.93
31+11.00	+6859.17
31+13.00	+6884.45
31+15.00	+6909.78
31+17.00	+6935.16
31+19.00	+6960.58
31+21.00	+6986.05
31+23.00	+7011.57
31+25.00	+7037.13
31+27.00	+7062.74
31+29.00	+7088.40
31+31.00	+7114.10
31+33.00	+7139.85
31+35.00	+7165.65
31+37.00	+7191.49
31+39.00	+7217.38
31+41.00	+7243.32
31+43.00	+7269.30
31+45.00	+7295.33
31+47.00	+7321.41
31+49.00	+7347.53
31+51.00	+7373.70
31+53.00	+7399.92
31+55.00	+7426.18
31+57.00	+7452.49
31+59.00	+7478.85
32+01.00	+7505.25
32+03.00	+7531.70
32+05.00	+7558.20
32+07.00	+7584.74
32+09.00	+7611.33
32+11.00	+7637.97
32+13.00	+7664.65
32+15.00	+7691.38
32+17.00	+7718.16
32+19.00	+7744.98
32+21.00	+7771.85
32+23.00	+7798.77
32+25.00	+7825.73
32+27.00	+7852.74
32+29.00	+7879.80
32+31.00	+7906.90
32+33.00	+7934.05
32+35.00	+7961.25
32+37.00	+7988.49
32+39.00	+8015.78
32+41.00	+8043.12
32+43.00	+8070.50
32+45.00	+8097.93
32+47.00	+8125.41
32+49.00	+8152.93
32+51.00	+8180.50
32+53.00	+8208.12
32+55.00	+8235.78
32+57.00	+8263.49
32+59.00	+8291.25
33+01.00	+8319.05
33+03.00	+8346.90
33+05.00	+8374.80
33+07.00	+8402.74
33+09.00	+8430.73
33+11.00	+8458.77
33+13.00	+8486.85
33+15.00	+8514.98
33+17.00	+8543.16
33+19.00	+8571.38
33+21.00	+8599.65
33+23.00	+8627.97
33+25.00	+8656.33
33+27.00	+8684.74
33+29.00	+8713.20
33+31.00	+8741.70
33+33.00	+8770.25
33+35.00	+8798.85
33+37.00	+8827.49
33+39.00	+8856.18
33+41.00	+8884.92
33+43.00	+8913.70
33+45.00	+8942.53
33+47.00	+8971.41
33+49.00	+9000.33
33+51.00	+9029.30
33+53.00	+9058.32
33+55.00	+9087.38
33+57.00	+9116.49
33+59.00	+9145.65
34+01.00	+9174.85
34+03.00	+9204.10
34+05.00	+9233.40
34+07.00	+9262.74
34+09.00	+9292.13
34+11.00	+9321.57
34+13.00	+9351.05
34+15.00	+9380.58
34+17.00	+9410.16
34+19.00	+9439.78
34+21.00	+9469.45
34+23.00	+9499.17
34+25.00	+9528.93
34+27.00	+9558.74
34+29.00	+9588.60
34+31.00	+9618.50
34+33.00	+9648.45
34+35.00	+9678.45
34+37.00	+9708.49
34+39.00	+9738.58
34+41.00	+9768.72
34+43.00	+9798.90
34+45.00	+9829.13
34+47.00	+9859.41
34+49.00	+9889.73
34+51.00	+9920.10
34+53.00	+9950.52
34+55.00	+9980.98
34+57.00	+10011.49
34+59.00	+10042.05
35+01.00	+10072.65
35+03.00	+10103.30
35+05.00	+10134.00
35+07.00	+10164.74
35+09.00	+10195.53
35+11.00	+10226.37
35+13.00	+10257.25
35+15.00	+10288.18
35+17.00	+10319.16
35+19.00	+10350.18
35+21.00	+10381.25
35+23.00	+10412.37
35+25.00	+10443.53
35+27.00	+10474.74
35+29.00	+10506.00
35+31.00	+10537.30
35+33.00	+10568.65
35+35.00	+10600.05
35+37.00	+10631.49
35+39.00	+10662.98
35+41.00	+10694.52
35+43.00	+10726.10
35+45.00	+10757.73
35+47.00	+10789.41
35+49.00	+10821.13
35+51.00	+10852.90
35+53.00	+10884.72
35+55.00	+10916.58
35+57.00	+10948.49
35+59.00	+10980.45
36+01.00	+11012.45
36+03.00	+11044.50
36+05.00	+11076.60
36+07.00	+11108.74
36+09.00	+11140.93
36+11.00	+11173.17
36+13.00	+11205.45
36+15.00	+11237.78
36+17.00	+11270.16
36+19.00	+11302.58
36+21.00	+11335.05
36+23.00	+11367.57
36+25.00	+11400.13
36+27.00	+11432.74
36+29.00	+11465.40
36+31.00	+11498.10
36+33.00	+11530.85
36+35.00	+11563.65
36+37.00	+11596.49
36+39.00	+11629.38
36+41.00	+11662.32
36+43.00	+11695.30
36+45.00	+11728.33
36+47.00	+11761.41
36+49.00	+11794.53
36+51.00	+11827.70
36+53.00	+11860.92
36+55.00	+11894.18
36+57.00	+11927.49
36+59.00	+11960.85
37+01.00	+11994.25
37+03.00	+12027.70
37+05.00	+12061.20
37+07.00	+12094.74
37+09.00	+12128.33
37+11.00	+12161.97
37+13.00	+12195.65
37+15.00	+12229.38
37+17.00	+12263.16
37+19.00	+12296.98
37+21.00	+12330.85
37+23.00	+12364.77
37+25.00	+12398.73
37+27.00	+12432.74
37+29.00	+12466.80
37+31.00	+12500.90
37+33.00	+12535.05
37+35.00	+12569.25
37+37.00	+12603.49
37+39.00	+12637.78
37+41.00	+12672.12
37+43.00	+12706.50
37+45.00	+12740.93
37+47.00	+12775.41
37+49.00	+12809.93
37+51.00	+12844.50
37+53.00	+12879.12
37+55.00	+12913.78
37+57.00	+12948.49
37+59.00	+12983.25
38+01.00	+13018.05
38+03.00	+13052.90
38+05.00	+13087.80
38+07.00	+13122.74
38+09.00	+13157.73
38+11.00	+13192.77
38+13.00	+13227.85
38+15.00	+13262.98
38+17.00	+13298.16
38+19.00	+13333.38
38+21.00	+13368.65
38+23.00	+13403.97
38+25.00	+13439.33
38+27.00	+13474.74
38+29.00	+13510.20
38+31.00	+13545.70
38+33.00	+13581.25
38+35.00	+13616.85
38+37.00	+13652.49
38+39.00	+13688.18
38+41.00	+13723.92
38+43.00	+13759.70
38+45.00	+13795.53
38+47.00	+13831.41
38+49.00	+13867.33
38+51.00	+13903.30
38+53.00	+13939.32
38+55.00	+13975.38
38+57.00	+14011.49
38+59.00	+14047.65
39+01.00	+14083.85
39+03.00	+14120.10
39+05.00	+14156.40
39+07.00	+14192.74
39+09.00	+14229.13
39+11.00	+14265.57
39+13.00	+14302.05
39+15.00	+14338.58
39+17.00	+14375.16
39+19.00	+14411.78
39+21.00	+14448.45
39+23.00	+14485.17
39+25.00	+14521.93
39+27.00	+14558.74
39+29.00	+14595.60
39+31.00	+14632.50
39+33.00	+14669.45
39+35.00	+14706.45
39+37.00	+14743.49
39+39.00	+14780.58
39+41.00	+14817.72
39+43.00	+14854.90
39+45.00	+14892.13
39+47.00	+14929.41
39+49.00	+14966.73
39+51.00	+15004.10
39+53.00	+15041.52
39+55.00	+15078.98
39+57.00	+15116.49
39+59.00	+15154.05
40+01.00	+15191.65
40+03.00	+15229.30
40+05.00	+15267.00
40+07.00	+15304.74
40+09.00	+15342.53
40+11.00	+15380.37
40+13.00	+15418.25
40+15.00	+15456.18
40+17.00	+15494.16
40+19.00	+15532.18
40+21.00	+15570.25
40+23.00	+15608.37
40+25.00	+15646.53
40+27.00	+15684.74
40+29.00	+15723.00
40+31

FOR INFORMATION ONLY

03-06-2015 LETTING ITEM 193

FOR INDEX OF SHEETS AND STANDARDS SEE SHEET NO. 2 AND 3

DESIGN DESIGNATIONS:

TAYLOR STREET	10,000(2040) COLLECTOR (URBAN)
SB I-90/94	148,000(2040) INTERSTATE
NB I-90/94	87,000(2040) INTERSTATE
NW RAMP	35,000(2040) INTERSTATE RAMP
SB TAYLOR EXIT RAMP	11,000(2040) INTERSTATE RAMP
NB TAYLOR ENT RAMP	11,000(2040) INTERSTATE RAMP

POSTED /DESIGN SPEEDS:

30 /30 MPH
45 /60 MPH
45 /60 MPH
35 /35 MPH
30 /30 MPH
30 /30 MPH

DANNY B. MANOJLOVSKI 062-051232 REGISTERED PROFESSIONAL ENGINEER OF ILLINOIS

DANNY B. MANOJLOVSKI 10/24/14 DATE
LICENSE EXPIRES 11/30/2015
SHEET RANGE 1-117, 120-145, 342-346, 353-370

STATE OF ILLINOIS MOUSSA A. ISSA 081-005738 LICENSED STRUCTURAL ENGINEER

MOUSSA A. ISSA 10/24/14 DATE
LICENSE EXPIRES 11/30/2014
SHEET RANGE 188-249, 253-270

NATHAN J. HOLMAN 062-058727 REGISTERED PROFESSIONAL ENGINEER OF ILLINOIS

NATHAN J HOLMAN 10/24/2014 DATE
LICENSE EXPIRES 11/30/2015
SHEET RANGE 1-117, 120-145, 342-346, 353-370

STATE OF ILLINOIS AMISH T. BHATT 081-006249 LICENSED STRUCTURAL ENGINEER

AMISH T. BHATT 10/24/14 DATE
LICENSE EXPIRES 11/30/2014
SHEET RANGE 146-148, 304-315

WILLIAM D. STERMER 062-060936 LICENSED PROFESSIONAL ENGINEER STATE OF ILLINOIS

WILLIAM D. STERMER 10/24/2014 DATE
LICENSE EXPIRES 11/30/2015
SHEET RANGE 168-187

RYAN P. JACOX 062-059141 LICENSED PROFESSIONAL ENGINEER OF ILLINOIS

RYAN P. JACOX 10/24/14 DATE
LICENSE EXPIRES 11/30/2015
SHEET RANGE 149-167

DISTRICT 1 DESIGN /CONSULTANT SERVICES: BRIAN KUTTAB, P.E. (847)705-4431 SCHAUMBURG, ILLINOIS

100' 200' 300' — 1"= 100'
10' 20' 30' — 1"= 10'
50' 100' — 1"= 50'
50' 100' — 1"= 40'
50' 100' — 1"= 30'
50' 100' — 1"= 20'

FULL SIZE PLANS HAVE BEEN PREPARED USING STANDARD ENGINEERING SCALES. REDUCED SIZED PLANS WILL NOT CONFORM TO STANDARD SCALES. IN MAKING MEASUREMENTS ON REDUCED PLANS, THE ABOVE SCALES MAY BE USED.

C.U.A.N.
CHICAGO ULITITY ALERT NETWORK
1-312-744-7000

PROJECT ENGINEER: LISA CHRZASC
PROJECT MANAGER: BRIAN KUTTAB

CONTRACT NO. 60W30

STATE OF ILLINOIS
DEPARTMENT OF TRANSPORTATION
DIVISION OF HIGHWAYS
PROPOSED
HIGHWAY PLANS

FAI ROUTE 90/94
AT I-290/CONGRESS PKWY (CIRCLE INTERCHANGE)
– TAYLOR ST AND ROOSEVELT RD BRIDGES
SECTION 2013-012R
BRIDGE REHABILITATION,
ROADWAY RECONSTRUCTION,
LIGHTING, TRAFFIC SIGNALS,
RETAINING WALL AND BRIDGE PAINTING
PROJECT: ACNHPP-000V(011)
COOK COUNTY
C-91-232-13

F.A.I. RTE.	SECTION	COUNTY	TOTAL SHEETS	SHEET NO.
90/94	2013-012R	COOK	385	1
	ILLINOIS	CONTRACT NO. 60W30		

3854 19 = 404

PROJECT LOCATED IN CITY OF CHICAGO

D-91-227-13

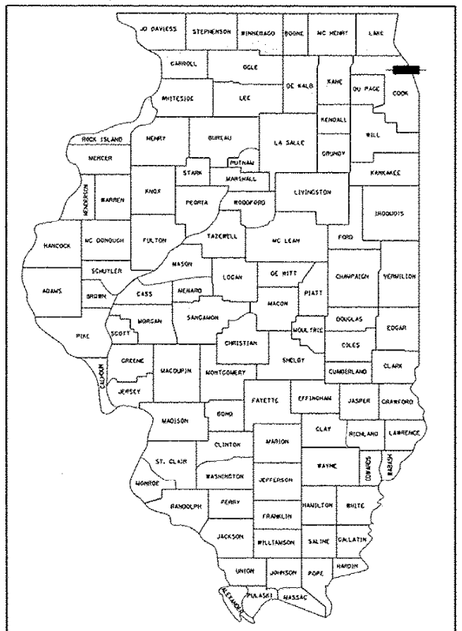

LOCATION OF SECTION INDICATED THUS: –

NPDES PERMIT INFORMATION

NPDES Disturbed Area 30 1.02 Acres

Approximate Location of Roadway is :
Longitude 87° 38' 41.14" W
Latitude 41° 52' 11.03" N

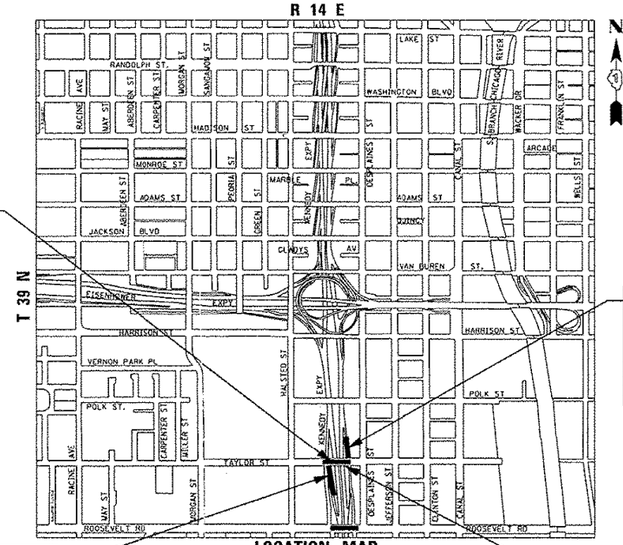

LOCATION MAP
NOT TO SCALE
THE PROJECT IS LOCATED IN THE CITY OF CHICAGO
GROSS LENGTH = 689.86 FT (0.131 MILES)
NET LENGTH = 439.15 FT (0.083 MILES)

TAYLOR STREET:
STA 7607+45.14 TO
STA 7614+35.00

TAYLOR STREET NB ENTRANCE RAMP
SN 016-2535
STA 6300+41.87 TO
STA 6305+21.15

RETAINING WALL 17
SN 016-1806
STA 6246+54.17 TO
STA 6248+31.57

TAYLOR STREET BRIDGE
SN 016-1165
STA 7610+96.84 TO
STA 7613+47.55

AECOM
HBM
Tran Systems

STATE OF ILLINOIS
DEPARTMENT OF TRANSPORTATION
DIVISION OF HIGHWAYS

SUBMITTED November 26, 20 14
DEPUTY DIRECTOR OF HIGHWAYS, REGION 1 ENGINEER
Jan 30, 20 15
ENGINEER OF DESIGN AND ENVIRONMENT
Jan 30, 20 15
DIRECTOR OF HIGHWAYS, CHIEF ENGINEER

PRINTED BY THE AUTHORITY OF THE STATE OF ILLINOIS

PLOT DATE: 10/2/2014

FILE NAME: pw:\\AECOM-NA-AWS1.aecomonline.local:AECOM_DS02_NA\Documents\01 Americas\Transportation\60269938 Circle\Phase_II\000_CAD\008_StructuralStructure_EXRW-34\Structure_EXRW-35\Final Plans\EXRW35-62A76-SHT-003

11:38:55 AM

HBM ENGINEERING GROUP, LLC

USER NAME = hassan.issa		DESIGNED - JJS, JMI		REVISED -	
		CHECKED - MI, MAI		REVISED -	
PLOT SCALE = N.T.S		DRAWN - JMI		REVISED -	
PLOT DATE = 1/24/2020		CHECKED - MI, MAI		REVISED -	

STATE OF ILLINOIS
DEPARTMENT OF TRANSPORTATION

EXISTING RECORD DRAWINGS
SHEET NO. AS11-12OFAS11-23 SHEETS

F.A.I. RTE.	SECTION	COUNTY	TOTAL SHEETS	SHEET NO.
90/94/290	2015-019R	COOK	2155	1414
		CONTRACT NO. 62A76		
	ILLINOIS	FED. AID PROJECT		

FOR INFORMATION ONLY

Benchmark: Cut square on faywalt at north line of Taylor Street, approximately 100' west of Des Plaines Street and 3' above walk (opposite traffic signal). Elevation 596.30.

Existing Structure: S.N. 016-2535 was originally constructed in 1988 as a five-span ramp structure carrying 1 lane of traffic from Taylor Street to I-90/94 northbound under IDOT Contract C-91-433-85 (F.A.I. Route 90/94; Section 1985-080R) with plans dated August 14, 1987. The bridge has not been rehabilitated. The structure has an overall length of approximately 428'-5 5/16" (back of abutment-to-centerline expansion joint: 9'-5 5/16" / 87'-0 1/2" / 118'-0" / 117'-0" / 94'-6") and an overall width of 25'-2" (out-to-out superstructure). The bridge is oriented in the north-south direction with no skew and carries 1 traffic lane from Taylor Street to I-90/94 northbound. The bridge superstructure consists of a 7 1/2"-thick (typ.) reinforced concrete deck with no overlay supported on four (4) 42"-web plate girders. According to the existing plans, these girders have been made composite except for a portion of their lengths above the piers. Stage construction on the bridge will not be allowed. The ramp must be closed during construction and scheduling of the work should coincide with Stage 1 Construction of the Taylor Street over I-90/94 structure (S.S 016-1165) located immediately to the south.

No Salvage.

LOADING

HS20-44 & ALTERNATE
ORIGINAL CONSTRUCTION (1988)

DESIGN SPECIFICATIONS

2002 AASHTO Standard Specifications for Highway Bridges

ORIGINAL CONSTRUCTION (1988)
1982 AASHTO Standard Specifications for Highway Bridges with 1984, 1985 and 1986 Interior Specifications.

DESIGN STRESSES

FIELD UNITS
f'_c = 3,500 psi (Concrete)
f_y = 60,000 psi (Reinforcement)

ORIGINAL CONSTRUCTION (1988)
f'_c = 3,500 psi (Concrete)
f_y = 60,000 psi (Reinforcement)
f_s = 50,000 psi (M270 Grade 50)
f_y = 36,000 psi (M270 Grade 36)

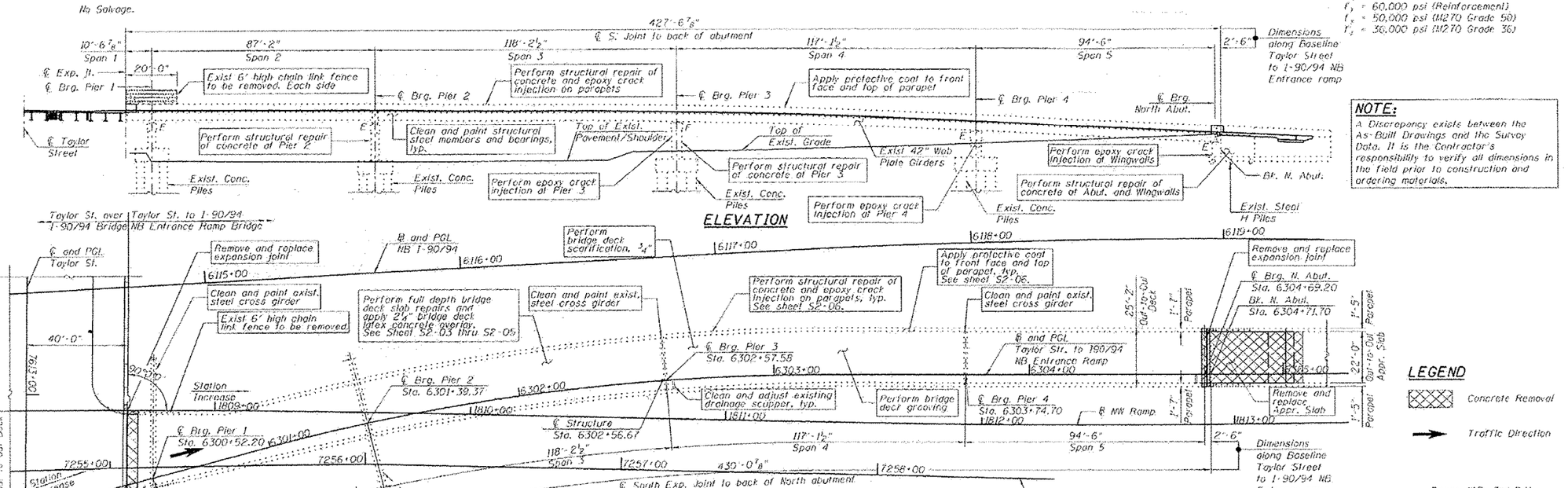

LEGEND

Concrete Removal

Traffic Direction

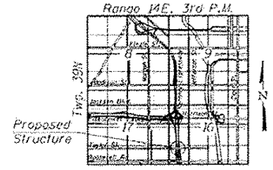

LOCATION SKETCH

NOTE:

A Discrepancy exists between the As-Built Drawings and the Survey Data. It is the Contractor's responsibility to verify all dimensions in the field prior to construction and ordering materials.

SCOPE OF WORK:

1. Provide protective shielding within limits as indicated on the plans.
2. Remove 3/4" from the existing bridge deck slab, using scarification.
3. Perform full-depth deck slab repairs.
4. Raise the existing grate on the existing drainage scuppers by adding a fabricated ring.
5. Remove and replace transverse expansion joints at the North Abutment and at the south end of the bridge with preformed joint strip seals.
6. Remove and replace portions of parapets and deck below as shown on Sheets S2-03, S2-06 and S2-07.
7. Remove existing 6' high chain link fence, perform structural repairs and epoxy crack injection for the east and west parapet.
8. Apply a 2 1/4" bridge deck latex concrete overlay to the bridge deck slab.
9. Perform bridge deck grooving for the 2 1/4" bridge deck latex concrete overlay and reconstructed transverse expansion joint areas.
10. Apply protective coat for the parapets entire length, both sides and reconstructed transverse expansion joint areas.
11. Clean and paint existing structural steel cross girders members, and bearings as shown on Sheets S2-14 and S2-15.
12. Perform structural concrete repairs for the North Abutment, Piers 2 and 3, and the parapets.
13. Perform epoxy crack injection for the North Abutment and Wingwalls, Piers 3 and 4 and the Parapets.
14. Remove and replace North Abutment Approach Slab with a standard 30' Approach Slab.
15. Repaint pavement markings on the top of deck. See Civil Plans.
16. For protective shield limits, see Sheets S2-03 and S2-04.

STATE OF ILLINOIS — MOUSSA A. ISSA — 081-005738 — CHICAGO, ILLINOIS — STRUCTURAL ENGINEER

Signed Moussa A. Issa
Moussa A. Issa, HBM Il. Lic. No. 081-005738
Expires 11-30-2016
Date 02/18/2015

For Sheets S2-01 Thru S2-18 (Total of 18 Sheets)

A Entire Sheet Revised

GENERAL PLAN & ELEVATION
TAYLOR ST. TO F.A.I. RTE. 90/94
NORTHBOUND ENTRANCE RAMP.
(DAN RYAN EXPRESSWAY)
F.A.I. RTE. 90/94 - SECTION 2013-012R
COOK COUNTY
STATION 6302+56.67
STRUCTURE NO. 016-2535

HBM ENGINEERING GROUP, LLC — 4449 WEST HARRISON ST., SUITE 251, HILLSIDE, IL 60162, PHONE: (708) 236-0900, FAX: (708) 236-0901	016-2535-ABW30-S01-GPE.dgn	DESIGNED - WM, MI	REVISED A 02/18/2015, KJD
	USER NAME = mustafa.alsheikh	DRAWN - WM, JJS	REVISED -
	PLOT SCALE = 40.00 ' / in.	CHECKED - MAI, MI	REVISED -
	PLOT DATE = 2/18/2015	DATE - 10/24/2014	REVISED -

STATE OF ILLINOIS
DEPARTMENT OF TRANSPORTATION

STRUCTURE NO. 016-2535

SCALE: | SHEET S2-01 OF S2-18 SHEETS | STA. | TO STA.

F.A.I. RTE.	SECTION	COUNTY	TOTAL SHEETS	SHEET NO.
90/94	2013-012R	COOK	365	254
		CONTRACT NO. 60W30		
		ILLINOIS	FED. AID PROJECT	

FILE PATH = C:\Users\mustafa.alsheikh\Desktop\S1\Structure\New folder\016-2535-ABW30-S01-GPE.dgn

FILE NAME: pw:\\AECOM-NA-AWS1.aecomonline.local:AECOM_DS02_NA\Documents\01 Americas\Transportation\60269938 CirclePhase_II\000_CAD\008_StructuralStructure_EXRW-34\Structure_EXRW-35\Final Plans\EXRW35-62A76-SHT-003

11:39:25 AM

HBM ENGINEERING GROUP, LLC	USER NAME = hassan.issa	DESIGNED - JJS, JMI	REVISED -	STATE OF ILLINOIS DEPARTMENT OF TRANSPORTATION	EXISTING RECORD DRAWINGS
		CHECKED - MI, MAI	REVISED -		
	PLOT SCALE = N.T.S	DRAWN - JMI	REVISED -		
	PLOT DATE = 1/24/2020	CHECKED - MI, MAI	REVISED -		SHEET NO. AS11-13 OF AS11-23 SHEETS

F.A.I. RTE.	SECTION	COUNTY	TOTAL SHEETS	SHEET NO.
90/94/290	2015-019R	COOK	2155	1415
		CONTRACT NO. 62A76		
		ILLINOIS	FED. AID PROJECT	

FOR INFORMATION ONLY

GENERAL NOTES:

1. Plan dimensions and details relative to existing plans are subject to nominal construction variations. The Contractor shall field verify existing dimensions and details affecting new construction and make necessary approved adjustments prior to construction or ordering of materials. Such variations shall not be cause for additional compensation for a change in scope of the work, however, the Contractor will be paid for the quantity actually furnished at the unit price bid for the work.
2. Reinforcement bars designated (E) shall be epoxy coated.
3. Concrete Sealer shall be applied to the exposed areas of the piers, north abutment and wingwalls.
4. The Contractor shall take all necessary precautions for the protection of passing vehicles from falling objects and/or materials until completion of the work.
5. Prior to pouring the new concrete deck for expansion joints reconstruction and deck slab repairs, all heavy or loose rust, loose mill scale, and other loose or potentially detrimental foreign material shall be removed from the surfaces in contact with concrete. Tightly adhered paint may remain unless otherwise noted. Removal shall be accomplished by method that will not damage the steel and the cost will be included in the pay item covering removal of the existing concrete.
6. The existing structural steel coating contains lead. The Contractor shall take appropriate precautions to deal with the presence of lead on this project.
7. The Inorganic Zinc Rich Primer / Acrylic / Acrylic Paint System shall be used for shop and field painting of new structural steel except where otherwise noted. The color of the final finish coat for all interior steel surfaces shall be gray, Munsell No. 5B 7/1. The color of the final finish coat for the exterior and bottom flange of the fascia beams shall be interstate green.

INDEX OF SHEETS

S2-01 General Plan and Elevation
S2-02 General Notes, Index of Sheets, Total Bill of Materials & PG Lines
S2-03 Bridge Deck Repair Plan (Spans 1 Thru 3)
S2-04 Bridge Deck Repair Plan (Spans 4 and 5)
S2-05 Top of Deck Scarification and Overlay Sections
S2-06 Parapet Repairs
S2-07 Parapet Repair Sections and Details
S2-08 South End of Bridge Joint Removal and Replacement
S2-09 North Abutment Joint Removal and Replacement
S2-10 North Approach Slab Plan
S2-11 North Approach Slab Section and Details
S2-12 Performed Joint Strip Seal
S2-13 Adjusting Drainage Scupper Details
S2-14 Framing Plan
S2-15 Painting Details
S2-16 North Abutment Repairs
S2-17 Piers 2, 3 and 4 Repairs
S2-18 Bar Splicer Assembly and Mechanical Splicer Details

TOTAL BILL OF MATERIAL

ITEM	UNIT	SUPER.	SUB.	TOTAL QUANTITY
Concrete Removal	CU YD	12.4		12.4
Protective Shield	SQ YD	640		640
Concrete Structures	CU YD		6.8	6.8
Concrete Superstructure	CU YD	44.3		44.3
Bridge Deck Grooving	SQ YD	1,044		1,044
Protective Coat	SQ YD	479		479
Cleaning and Painting Structural Steel, Location 1	L. SUM	1		1
Reinforcement Bars, Epoxy Coated	POUND	10,330		10,330
Bar Splicers	EACH	23		23
Preformed Joint Strip Seal	FOOT	62		62
Concrete Sealer	SQ FT		430	430
Epoxy Crack Injection	FOOT	648	36	684
Chain Link Fence Removal	FOOT	40		40
Bridge Deck Latex Concrete Overlay, 2 1/4 Inches	SQ YD	1,042		1,042
Containment and Disposal of Lead Paint Cleaning Residues	L SUM	0.5		0.5
Bridge Deck Scarification, 3/4"	SQ YD	1,042		1,042
Structural Repair of Concrete (Depth equal to or less than 5")	SQ FT	6	51	57
Structural Repair of Concrete (Depth greater than 5")	SQ FT		12	12
Deck Slab Repair (Full Depth, Type II)	SQ YD	86		86
Drainage Scuppers to be Adjusted	EACH	2		2

CURVE DATA

(Taylor St. to I-90/94 NB Entrance Ramp)
(Prop. Curve P-TAY-NT-1)

P.I. Sta. = 6302+08.82
Δ = 15° 46' 18" (RT)
D = 7° 16' 15"
R = 788.01'
T = 109.15
L = 216.92'
E = 7.52'
e = Match Existing
T.R. = NA
S.E. Run = NA
P.C. Sta. = 6300+99.68
P.T. Sta. = 6303+16.59
DS = 30

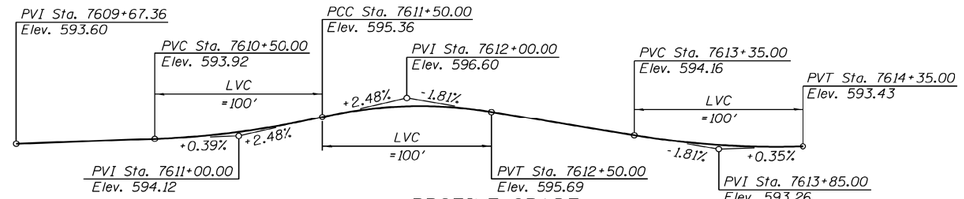

PROFILE GRADE
(along ℄ Taylor St.)

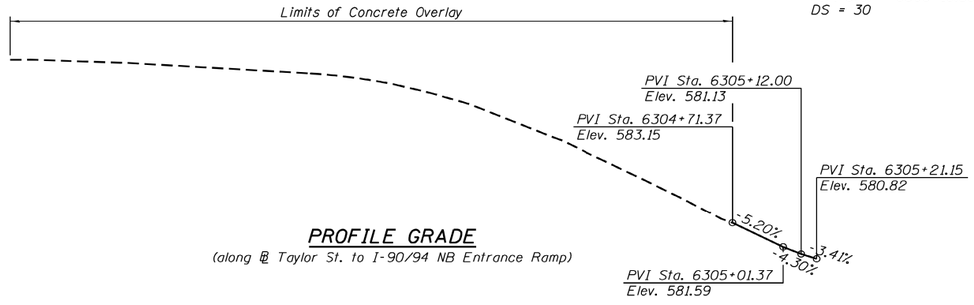

PROFILE GRADE
(along ℄ Taylor St. to I-90/94 NB Entrance Ramp)

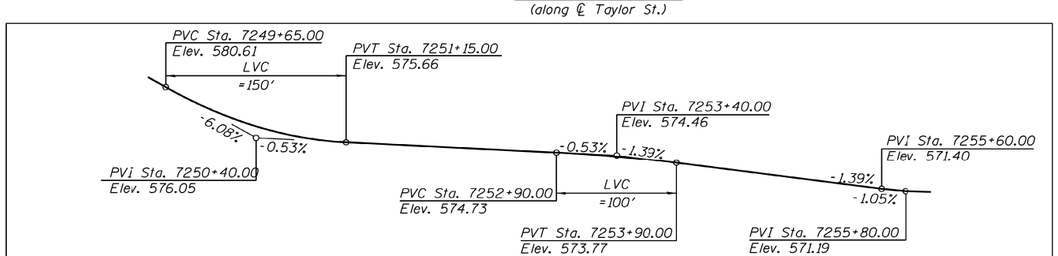

PROFILE GRADE
(along ℄ Roosevelt Rd NB Entrance Ramp)

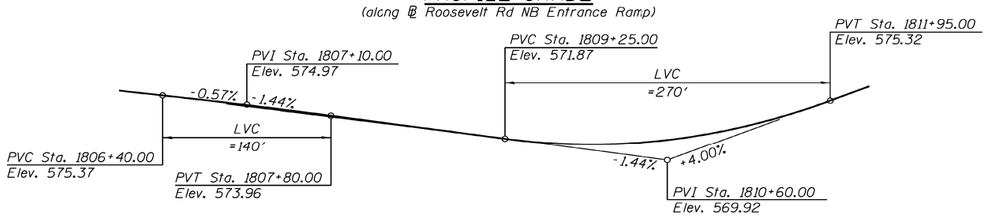

PROFILE GRADE
(along ℄ NW Ramp)

For Information Only
(Part of Future Contract)

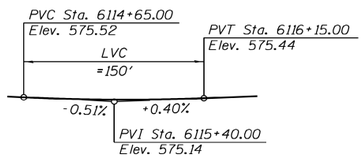

PROFILE GRADE
(along ℄ NB I-90/94)

HBM ENGINEERING GROUP, LLC
4415 WEST HARRISON ST. SUITE 231
HILLSIDE, IL 60162
PHONE: (708) 236-0900
FAX: (708) 236-0901
CONSULTING & DESIGN INSPECTION & RATING RESEARCH & TESTING

0162535-60W30-S02-IndexGenNoteBOM	DESIGNED - MI, KJD	REVISED
USER NAME = lisa.kallemeyn	DRAWN - KJD	REVISED
PLOT SCALE = 0:2.0000 '' / in.	CHECKED - MAI, MI	REVISED
PLOT DATE = 12/2/2014	DATE - 10/24/2014	REVISED

STATE OF ILLINOIS
DEPARTMENT OF TRANSPORTATION

GENERAL NOTES, INDEX OF SHEETS, TOTAL BILL OF MATERIAL & PG LINES
STRUCTURE NO. 016-2535

SCALE: | SHEET S2-02 OF S2-18 SHEETS | STA. | TO STA.

F.A.I RTE.	SECTION	COUNTY	TOTAL SHEETS	SHEET NO.
90/94	2013-012R	COOK	385	255
		CONTRACT NO. 60W30		
		ILLINOIS	FED. AID PROJECT	

FILE PATH = pw:\\388839-pwcn1.aecomonline.local:PWAECOM00\Documents\01 Americas\Transportation\60269938 Circle\Phase II\000 CAD\008 Structural\Structure 016-2535\016253560W30-S02-IndexGenNoteBOM

HBM ENGINEERING GROUP, LLC

USER NAME = hassan.issa	DESIGNED - JJS, JMI	REVISED -	
	CHECKED - MI, MAI	REVISED -	
PLOT SCALE = N.T.S	DRAWN - JMI	REVISED -	
PLOT DATE = 1/24/2020	CHECKED - MI, MAI	REVISED -	

STATE OF ILLINOIS
DEPARTMENT OF TRANSPORTATION

EXISTING RECORD DRAWINGS

SHEET NO. AS11-14 OF AS11-23 SHEETS

F.A.I. RTE.	SECTION	COUNTY	TOTAL SHEETS	SHEET NO.
90/94/290	2015-019R	COOK	2155	1416
		CONTRACT NO. 62A76		
		ILLINOIS	FED. AID PROJECT	

FILE NAME: pw:\\AECOM-NA-AWS1.aecomonline.local:AECOM_DS02_NA\Documents\01 Americas\Transportation\60269938 Circle\Phase II\000_CAD\008_Structural\Structure_EXRW-34\Structure_EXRW-35\Final Plans\EXRW35-62A76-SHT-003

11:39:56 AM

FOR INFORMATION ONLY

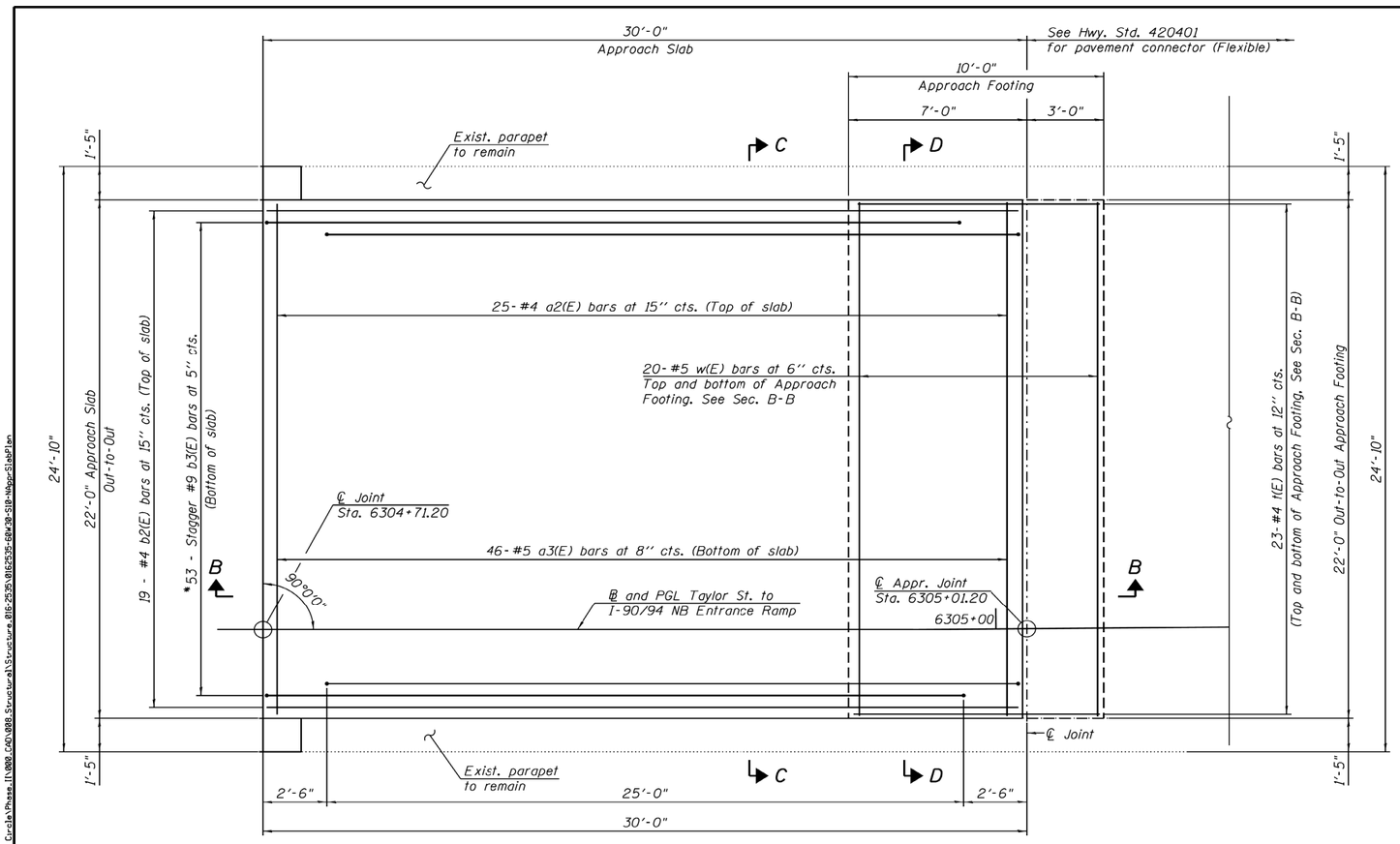

APPROACH PLAN

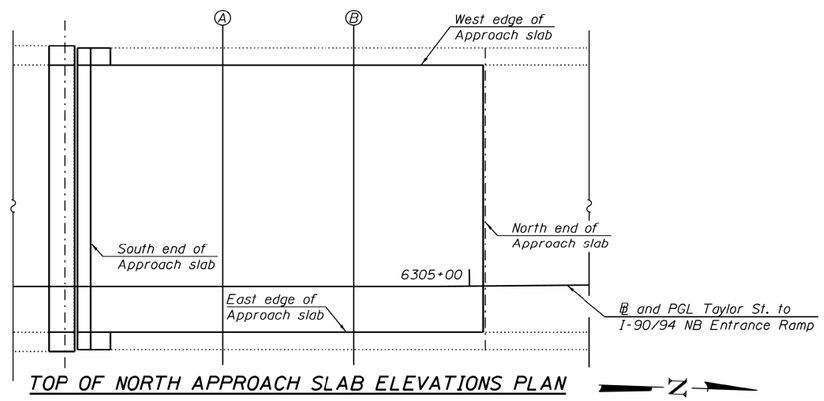

TOP OF NORTH APPROACH SLAB ELEVATIONS PLAN

* Tilt bars as required to maintain clearance

** Cost included with Concrete Superstructure.

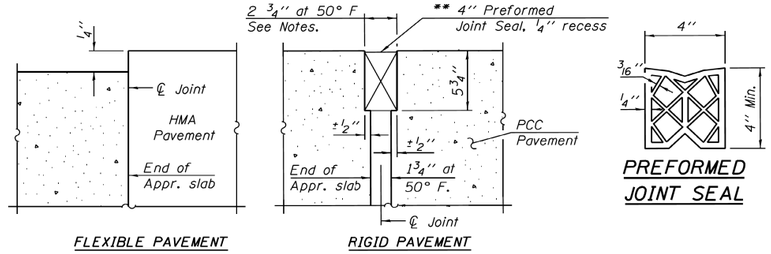

FLEXIBLE PAVEMENT RIGID PAVEMENT

PREFORMED JOINT SEAL

DETAIL A

WEST EDGE OF NORTH APPROACH SLAB

Location	Station	Offset	Theoretical Grade Elevations
S. End North Appr. Slab	6304+71.20	-18.25'	583.91
A	6304+81.20	-18.25'	583.17
B	6304+91.20	-18.25'	582.42
N. End North Appr. Slab	6305+1.36	-18.21'	581.68

℄ AND PGL TAYLOR ST. TO I-90/94 NB ENTRANCE RAMP

Location	Station	Offset	Theoretical Grade Elevations
S. End North Appr. Slab	6304+71.20	0.00'	583.15
A	6304+81.20	0.00'	582.64
B	6304+91.20	0.00'	582.12
N. End North Appr. Slab	6305+1.20	0.00'	581.60

EAST EDGE OF NORTH APPROACH SLAB

Location	Station	Offset	Theoretical Grade Elevations
S. End North Appr. Slab	6304+71.20	3.75'	583.07
A	6304+81.20	3.75'	582.55
B	6304+91.20	3.75'	582.01
N. End North Appr. Slab	6305+1.17	3.79'	581.48

NOTES:

1. For Sections B-B, C-C, and D-D, see Sheet S2-11.
2. a2(E) and a3(E) bar spacings measured along ℄ Roadway.
3. For parapet replacement details, see Sheet S2-09.

FILE PATH = pw:\388839-pwint.aecomonline.local:PWAECOM01\Documents\01 Americas\Transportation\60269938 Circle\Phase_II\000_CAD\008_Structural\Structure_016-2535\016253560W30-S10-NAppr SlabPlan.

HBM ENGINEERING GROUP, LLC CONSULTING & DESIGN INSPECTION & RATING RESEARCH & TESTING — 4415 WEST HARRISON ST. SUITE 231 HILLSIDE, IL 60162 PHONE: (708) 236-0900 FAX: (708) 236-0901	016253560W30-S10-NApprSlabPlan	DESIGNED - MI, KJD	REVISED
	USER NAME = lisa.kallemeyn	DRAWN - KJD	REVISED
	PLOT SCALE = 5.33 ' / in.	CHECKED - MAI, MI	REVISED
	PLOT DATE = 12/2/2014	DATE - 10/24/2014	REVISED

STATE OF ILLINOIS
DEPARTMENT OF TRANSPORTATION

NORTH APPROACH SLAB PLAN
STRUCTURE NO. 016-2535

SCALE: | SHEET S2-10 OF S2-18 SHEETS | STA. | TO STA.

F.A.I RTE.	SECTION	COUNTY	TOTAL SHEETS	SHEET NO.
90/94	2013-012R	COOK	385	263
		CONTRACT NO. 60W30		
	ILLINOIS	FED. AID PROJECT		

FILE NAME: pw:\\AECOM-NA-AWS1.aecomonline.local:AECOM_DS02_NA\Documents\01 Americas\Transportation\60269938 Circle\Phase_II\000_CAD\008_Structural\Structure_016-2535\016253560W30-S10-NApprSlabPlan

11:40:35 AM

HBM ENGINEERING GROUP, LLC	USER NAME = hassan.issa	DESIGNED - JJS, JMI	REVISED -	
		CHECKED - MI, MAI	REVISED -	
	PLOT SCALE = N.T.S	DRAWN - JMI	REVISED -	
	PLOT DATE = 1/24/2020	CHECKED - MI, MAI	REVISED -	

STATE OF ILLINOIS
DEPARTMENT OF TRANSPORTATION

EXISTING RECORD DRAWINGS

SHEET NO. AS11-15 OF AS11-23 SHEETS

F.A.I. RTE.	SECTION	COUNTY	TOTAL SHEETS	SHEET NO.
90/94/290	2015-019R	COOK	2155	1417
		CONTRACT NO. 62A76		
	ILLINOIS	FED. AID PROJECT		

FOR INFORMATION ONLY

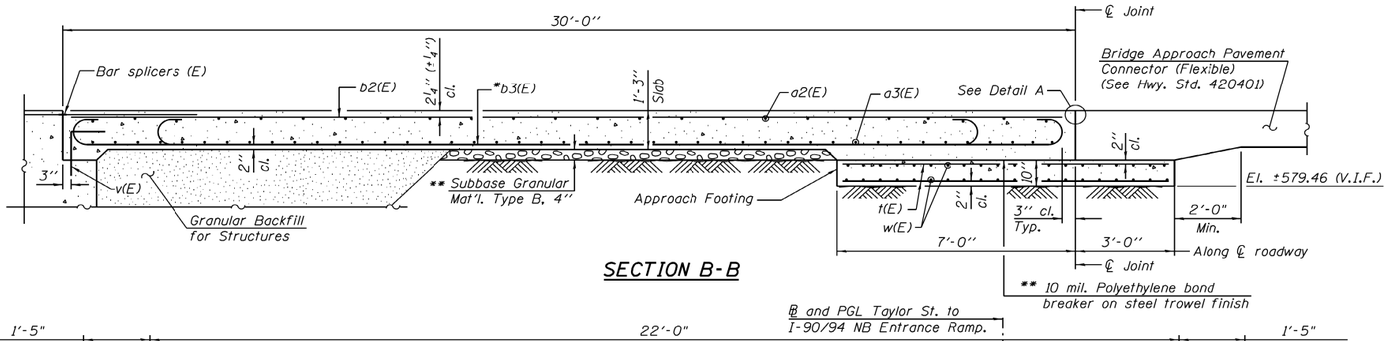

SECTION B-B

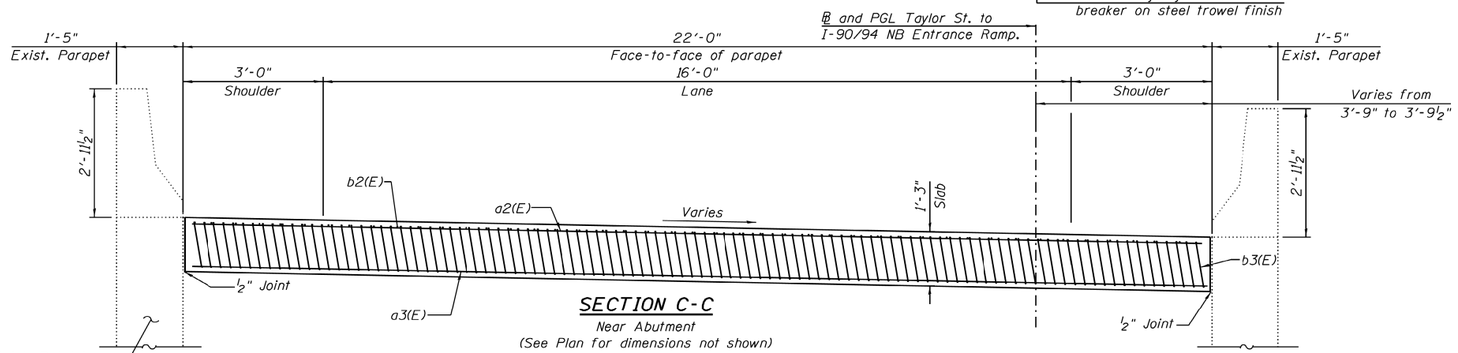

SECTION C-C

Near Abutment
(See Plan for dimensions not shown)

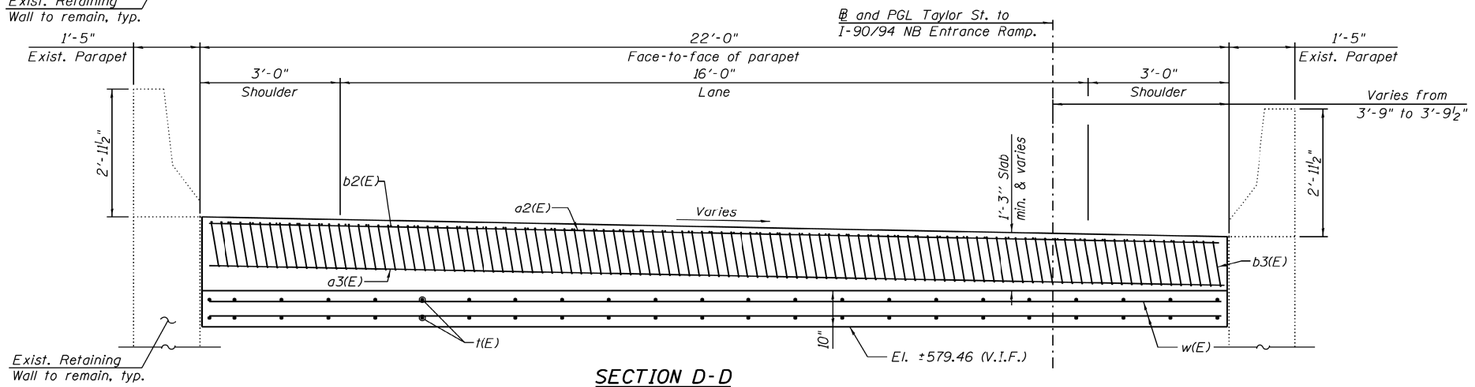

SECTION D-D

At Approach Footing
(See Plan for dimensions not shown)

BILL OF MATERIAL

Bar	No.	Size	Length	Shape
a2(E)	25	#4	21'-7"	
a3(E)	46	#5	21"-7"	
b2(E)	19	#4	29'-8"	
b3(E)	53	#9	29'-9"	
t(E)	46	#4	9'-8"	
w(E)	40	#5	21'-7"	
Concrete Structures			Cu. Yd.	6.8
Concrete Superstructure			Cu. Yd.	31.9
Bridge Deck Grooving			Sq. Yd.	67
Protective Coat			Sq. Yd.	98
Reinforcement Bars, Epoxy Coated			Pound	8,340

* Tilt #9 b_3(E) bars as required to maintain clearance.

** Cost included with Concrete Superstructure.

NOTES:

1. For Detail A, see Sheet S2-10.
2. Approach slab concrete shall be paid for as Concrete Superstructure.
3. Approach footing concrete shall be paid as Concrete Structures.
4. Reinforcement shall be paid for as Reinforcement Bars, Epoxy Coated.
5. The approach footing maximum applied bearing pressure (Qmax) = 2.0 ksf.
6. For bar splicer details, see Sheets S2-09 and S2-18.
7. Cost of excavation for Approach Footing included with Concrete Structures.
8. For v(e) bar details, see Sheet S2-09.

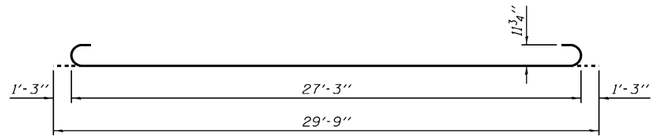

BAR b3(E)

BA-0

12-12-12

FILE PATH = pw:\388033-pwnt.aecomcloud.com.local\PWECDM90\Documents\01 Americas\Transportation\60269938 Circle\Phase_II\000_CAD\008_Structural\Structure_016-2535\016253560W30-SII-NApproachSectionsDetails.dgn

HBM ENGINEERING GROUP, LLC — 4415 WEST HARRISON ST. SUITE 231, HILLSIDE, IL 60162, PHONE: (708) 236-0900, FAX: (708) 236-0901 — CONSULTING & DESIGN, INSPECTION & RATING, RESEARCH & TESTING			
016253560W30-SII-NApproachSectionsDetails	DESIGNED - MI, KJD	REVISED	
USER NAME = lisa.kallemeyn	DRAWN - KJD	REVISED	
PLOT SCALE = 02.0000 '' / in.	CHECKED - MI, MAI	REVISED	
PLOT DATE = 12/2/2014	DATE - 10/24/2014	REVISED	

STATE OF ILLINOIS
DEPARTMENT OF TRANSPORTATION

NORTH APPROACH SLAB SECTION AND DETAILS
STRUCTURE NO. 016-2535

SCALE: | SHEET S2-11 OF S2-18 SHEETS | STA. | TO STA.

F.A.I RTE.	SECTION	COUNTY	TOTAL SHEETS	SHEET NO.
90/94	2013-012R	COOK	385	264
		CONTRACT NO. 60W30		
		ILLINOIS	FED. AID PROJECT	

FILE NAME: pw:\AECOM-NA-AWS1.aecomonline.local\AECOM_DS02_NA\Documents\01 Americas\Transportation\60269938 Circle\Phase_II\000_CAD\008_Structural\Structure_016-2535\016253560W30-SII-NApproachSectionsDetails.dgn

HBM ENGINEERING GROUP, LLC

USER NAME = hassan.issa	DESIGNED - JJS, JMI	REVISED -	**STATE OF ILLINOIS DEPARTMENT OF TRANSPORTATION**	**EXISTING RECORD DRAWINGS**	
	CHECKED - MI, MAI	REVISED -			
PLOT SCALE = N.T.S	DRAWN - JMI	REVISED -			
PLOT DATE = 1/24/2020	CHECKED - MI, MAI	REVISED -		SHEET NO. AS11-16 OF AS11-23 SHEETS	

F.A.I. RTE.	SECTION	COUNTY	TOTAL SHEETS	SHEET NO.
90/94/290	2015-019R	COOK	2155	1418
		CONTRACT NO. 62A76		
		ILLINOIS	FED. AID PROJECT	

11:41:11 AM

FOR INFORMATION ONLY

F.A.I. RTE.	SECTION	COUNTY	TOTAL SHEETS	SHEET NO.
90/94/290	2013-010R	COOK	747	1
	ILLINOIS	CONTRACT NO. 60W28		

A *854 - 12
*34 = 876
*747 + 107 = 854

PROJECT LOCATED IN CITY OF CHICAGO

D-91-227-13



LOCATION OF SECTION INDICATED THUS: –

FOR INDEX OF SHEETS AND STANDARDS SEE SHEET NO. 2 AND 3

DESIGN DESIGNATIONS:

HALSTED STREET	23,000(2040)	MINOR ARTERIAL (URBAN)
HARRISON STREET	17,000(2040)	COLLECTOR (URBAN)
PEORIA STREET	0(2040)	PEDESTRIAN BRIDGE
SB I-90/94	98,000(2040)	INTERSTATE
NB I-90/94	81,000(2040)	INTERSTATE
WB I-290	31,000(2040)	INTERSTATE
EB I-290	33,000(2040)	INTERSTATE
ES RAMP	44,000(2040)	INTERSTATE RAMP
NW RAMP	36,000(2040)	INTERSTATE RAMP
SW RAMP	23,000(2040)	INTERSTATE RAMP
EN RAMP	31,000(2040)	INTERSTATE RAMP
NE RAMP	4,000(2040)	INTERSTATE RAMP
WS RAMP	8,000(2040)	INTERSTATE RAMP
SE RAMP	5,000(2040)	INTERSTATE RAMP
NB TAYLOR ENTRANCE	11,000(2040)	INTERSTATE RAMP
NB ROOSEVELT ENTRANCE	6,000(2040)	INTERSTATE RAMP

POSTED /DESIGN SPEEDS:

30 /30 MPH
25 /25 MPH
N/A MPH
45 /60 MPH
45 /60 MPH
45 /50 MPH
45 /50 MPH
40 /40 MPH
35 /35 MPH
35 /35 MPH
30 /30 MPH
30 /30 MPH
25 /25 MPH
25 /25 MPH
30 /30 MPH
30 /30 MPH

DANNY B. MANOJLOVIKI 062-051232 REGISTERED PROFESSIONAL ENGINEER OF ILLINOIS
Danny B. Manojlovi 3/28/2014
DANNY B. MANOJLOVIKI DATE
LICENSE EXPIRES 11/30/2015
SHEET RANGE

KEVIN C. FUHR 062-059004 LICENSED PROFESSIONAL ENGINEER STATE OF ILLINOIS
K. C. Fuhr 3/28/14
KEVIN C. FUHR DATE
LICENSE EXPIRES 11/30/2015
SHEET RANGE

WILLIAM D. STERMER 062-060936 LICENSED PROFESSIONAL ENGINEER STATE OF ILLINOIS
William D Sterm 3/28/2014
WILLIAM D. STERMER DATE
LICENSE EXPIRES 11/30/2015
SHEET RANGE

AMISH T. BHATT 081-006249 LICENSED STRUCTURAL ENGINEER STATE OF ILLINOIS
Amish T. Bhatt 3/28/14
AMISH T. BHATT DATE
LICENSE EXPIRES 11/30/2014
SHEET RANGE

CHAD R. LAUCAMP 062-055364 REGISTERED PROFESSIONAL ENGINEER OF ILLINOIS
3/28/14
CHAD R. LAUCAMP DATE
LICENSE EXPIRES 11/30/2015
SHEET RANGE

BRAD M. RADOVICH 081.006964 REGISTERED STRUCTURAL ENGINEER OF ILLINOIS
Brad M Rad 3/28/2014
BRAD M. RADOVICH DATE
LICENSE EXPIRES 11/30/2014
SHEET RANGE

EDWARD E. YOUSIF 062-056382 REGISTERED PROFESSIONAL ENGINEER OF ILLINOIS
Edward Yousif 3/28/14
EDWARD E. YOUSIF DATE
LICENSE EXPIRES 11/30/2015
SHEET RANGE

DAJIN LIU 081-005944 LICENSED STRUCTURAL ENGINEER STATE OF ILLINOIS
Dajin Liu 3/28/14
DAJIN LIU DATE
LICENSE EXPIRES 11/30/2014
SHEET RANGE

Design Designation – 35,375(40) Interstate 22.25 (PCC–20)

100' 200' 300' — 1" = 100'
10' 20' 30' — 1" = 10'
1" = 50'
1" = 40'
1" = 30'
1" = 20'

FULL SIZE PLANS HAVE BEEN PREPARED USING STANDARD ENGINEERING SCALES. REDUCED SIZED PLANS WILL NOT CONFORM TO STANDARD SCALES. IN MAKING MEASUREMENTS ON REDUCED PLANS, THE ABOVE SCALES MAY BE USED.

C.U.A.N.
CHICAGO ULITITY ALERT NETWORK
1-312-744-7000

PROJECT ENGINEER: LISA CHRZASC
PROJECT MANAGER: BRIAN KUTTAB

CONTRACT NO. 60W28

DISTRICT 1 DESIGN /CONSULTANT SERVICES: BRIAN KUTTAB, P.E. (847)705-4431 SCHAUMBURG, ILLINOIS

STATE OF ILLINOIS
DEPARTMENT OF TRANSPORTATION
DIVISION OF HIGHWAYS
PROPOSED
HIGHWAY PLANS

FAI ROUTE 90/94/290 (I-90/94/290)
AT I-290/CONGRESS PARKWAY
(CIRCLE INTERCHANGE) — FLYOVER
N TO W I-290
SECTION 2013-010R
BRIDGE CONSTRUCTION,
ROADWAY RECONSTRUCTION,
BRIDGE REMOVAL AND LIGHTING
PROJECT: ACNHPP-000S(990)
COOK COUNTY
C-91-230-13

NPDES PERMIT INFORMATION
NPDES Disturbed Area = 7.56 A Acres
Approximate Location of Roadway is :
Longitude 87° 38' 44.95" W
Latitude 41° 52' 32.06" N

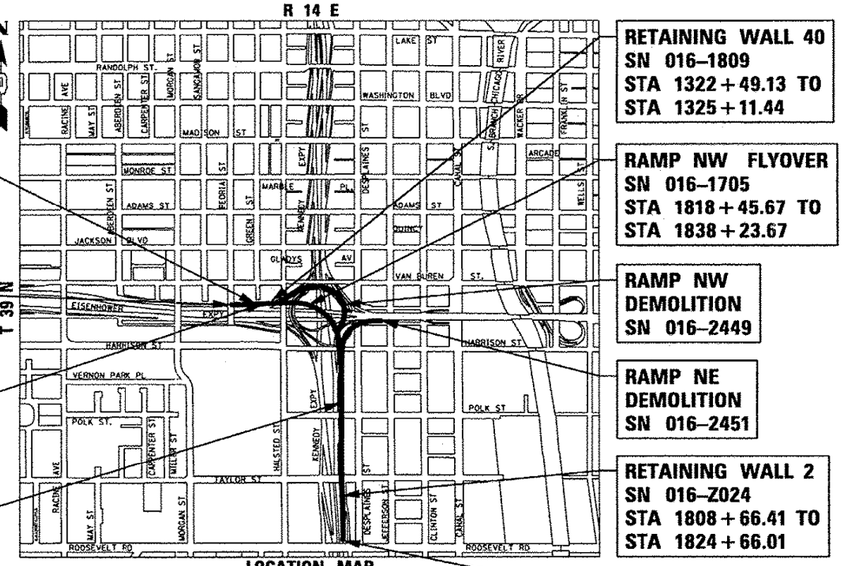

LOCATION MAP
NOT TO SCALE

GROSS LENGTH = 3562.61 FT. (0.675 MILES)
NET LENGTH = 3562.61 FT. (0.675 MILES)

RETAINING WALL 3
SN 016-1722
STA 1838+15.67 TO
STA 1841+50.00

END PROJECT LIMIT
STA 1842+02.61

RETAINING WALL 4
SN 016-1723
STA 1838+23.17 TO
STA 1841+26.23

RETAINING WALL 1
SN 016-1720
STA 1813+60.00 TO
STA 1818+53.67 (WEST WALL)
STA 1816+00.00 TO
STA 1818+46.17 (EAST WALL)

RETAINING WALL 40
SN 016-1809
STA 1322+49.13 TO
STA 1325+11.44

RAMP NW FLYOVER
SN 016-1705
STA 1818+45.67 TO
STA 1838+23.67

RAMP NW DEMOLITION
SN 016-2449

RAMP NE DEMOLITION
SN 016-2451

RETAINING WALL 2
SN 016-Z024
STA 1808+66.41 TO
STA 1824+66.01

BEGIN PROJECT LIMIT
STA. 1806+40.00

AECOM
TranSystems

STATE OF ILLINOIS
DEPARTMENT OF TRANSPORTATION
DIVISION OF HIGHWAYS

SUBMITTED May 2, 20 14
John Fortmann
DEPUTY DIRECTOR OF HIGHWAYS, REGION ENGINEER
May 9, 20 14
John D. Baranzelli, P.E.
acting ENGINEER OF DESIGN AND ENVIRONMENT
May 9, 20 14
Omer Osman, P.E.
DIRECTOR OF HIGHWAYS, CHIEF ENGINEER

PRINTED BY THE AUTHORITY OF THE STATE OF ILLINOIS

A Rev. 6-2-14

PLOT DATE: 3/18/2014

HBM ENGINEERING GROUP, LLC	USER NAME = hassan.issa	DESIGNED - JJS, JMI	REVISED -	
		CHECKED - MI, MAI	REVISED -	
	PLOT SCALE = N.T.S	DRAWN - JMI	REVISED -	
	PLOT DATE = 1/24/2020	CHECKED - MI, MAI	REVISED -	

STATE OF ILLINOIS
DEPARTMENT OF TRANSPORTATION

EXISTING RECORD DRAWINGS

SHEET NO. AS11-17 OF AS11-23 SHEETS

F.A.I. RTE.	SECTION	COUNTY	TOTAL SHEETS	SHEET NO.
90/94/290	2015-019R	COOK	2155	1419
		CONTRACT NO. 62A76		
		ILLINOIS	FED. AID PROJECT	

FILE NAME: pw:\AECOM-NA-AWS1.aecomonline.local:AECOM_DS02_NA\Documents\01 Americas\Transportation\60269938 Circle\Phase_II\000_CADD\008_StructuralStructure_EXRW-34\Structure_EXRW-35\Final Plans\EXRW35-62A76-SHT-003

11:41:48 AM

FOR INFORMATION ONLY

INDEX OF SHEETS

1	COVER SHEET
2	INDEX OF DRAWINGS AND HIGHWAY STANDARDS
3	HIGHWAY, DISTRICT 1 AND IDOT TSC STANDARDS AND COMMITMENTS
4	GENERAL NOTES
5-21G	SUMMARY OF QUANTITIES
22-32	TYPICAL SECTIONS
33-38	SCHEDULE OF QUANTITIES
39-45, ~~46~~	DRAINAGE AND UTILITY SCHEDULES
47-58	ALIGNMENT, TIES, AND BENCHMARKS
59	ROADWAY KEY PLAN
60-65	EXISTING AND PROPOSED PLAN - RAMP NW
66-69	ROADWAY PROFILE - RAMP NW
70	ROADWAY PLAN & PROFILE - INTERIM RAMP SW TIE IN AT WB I-290
71-73, ~~74~~	ROADWAY IMPROVEMENT PLANS
75-79	SUPERELEVATION TRANSITION DETAILS
80-81	GORE GRADING DETAILS
82-85C	JOINTING AND PCC PAVEMENT DETAIL PLANS
86-90J	DETOUR PLANS
91-92G	DETOUR PLAN - TEMPORARY INFORMATION SIGNING
93	SUGGESTED STAGES OF CONSTRUCTION AND TRAFFIC CONTROL PLAN - GENERAL NOTES
94-96A	SUGGESTED STAGES OF CONSTRUCTION AND TRAFFIC CONTROL PLAN - NARRATIVE
97-98	SUGGESTED STAGES OF CONSTRUCTION AND TRAFFIC CONTROL PLAN - SCHEDULES
98AA-98BY	MAINLINE AND RAMPS - SPECIAL CLOSURES
99-103	SUGGESTED STAGES OF CONSTRUCTION AND TRAFFIC CONTROL PLAN - TYPICAL SECTIONS
104-105	SUGGESTED STAGES OF CONSTRUCTION AND TRAFFIC CONTROL PLAN - TEMPORARY ALIGNMENTS
106-109	PROPOSED AND PROFILE PLAN - TEMPORARY RAMPS
110-194	SUGGESTED STAGES OF CONSTRUCTION AND TRAFFIC CONTROL PLAN - MAINLINE STAGES 1 - 4
197	EROSION CONTROL GENERAL NOTES
198-199	EROSION CONTROL SCHEDULES
200-215	EROSION AND SEDIMENTATION CONTROL PLAN - STAGE 1 - 4
216-219	PERMANENT EROSION AND SEDIMENTATION CONTROL PLAN
220-225	DRAINAGE AND UTILITY PLAN
226-229	DRAINAGE AND UTILITY PROFILE
~~230,~~ 231, ~~232~~	DRAINAGE AND UTILITY PLAN AND PROFILE
233-237	GRADING PLAN
238-241	WATER MAIN RELOCATION PLANS
242-245	WATER MAIN RELOCATION DETAILS
246	WATER MAIN RELOCATION - RISER SHAFTS
247-248	WATER MAIN RELOCATION EXISTING INFORMATION
249-256	UTILITY LOCATION PLANS
257-268	PAVEMENT MARKING PLAN
269-276	SIGNING PLAN
~~277,~~ 278-280	SIGNING DETAILS
281-281A	OVERHEAD SIGN PANEL PLACEMENT
282-290A	OVERHEAD SIGN STRUCTURE DETAILS
291-307	LIGHTING PLANS AND DETAILS
308-316E	ITS PLANS AND DETAILS
317-469L	FAI 90/94 NB TO FAI 290 WB (RAMP NW) BRIDGE PLANS (SN 016-1705)
470	STRUCTURAL REMOVAL PLAN
471-518	EXISTING FAI 90/94 NB TO FAI 290 WB (RAMP NW & RAMP NE) BRIDGE PLANS
519-532C	RETAINING WALL PLANS (RW 1) SN 016-1720
533-544	EXISTING RETAINING WALL REHABILITATION PLANS (EXIST RW 2) SN 016-1721
545-554B	RETAINING WALL PLANS (RW 3) SN 016-1722
555-567B	RETAINING WALL PLANS (RW 4) SN 016-1723
568-578A	RETAINING WALL PLANS (RW 40) SN 016-1809
579-584B	NOISE ABATEMENT WALL DETAILS
584C, 585-620	DISTRICT 1 DETAILS
621-636	IDOT TRAFFIC SYSTEMS CENTER STANDARD DRAWINGS
637-644	CHICAGO DEPARTMENT OF WATER MANAGEMENT - STANDARD DETAILS
644A-644T	ROADWAY DETAILS
645-645A	DRAINAGE DETAILS
646-696	CROSS SECTIONS - RAMP NW
697-704	CROSS SECTIONS - RAMP NW (NB TEMP)
705-712	CROSS SECTIONS - RAMP NW (WB TEMP)
713-731	CROSS SECTIONS - RAMP SW (TEMP)
732-746	CROSS SECTIONS - RETAINING WALL 016-1809
746A-746F	CROSS SECTIONS - RAMP SW (INTERIM)
747-747A	CROSS SECTIONS - SB I-90/94 - HIGH MAST LIGHT TOWER

HIGHWAY STANDARDS

000001-06	STANDARD SYMBOLS, ABBREVIATIONS AND PATTERNS
001001-02	AREAS OF REINFORCEMENT BARS
001006	DECIMAL OF AN INCH AND OF A FOOT
280001-07	TEMPORARY EROSION CONTROL SYSTEMS
420001-07	PAVEMENT JOINTS
420101-04	24' (7.2m) JOINTED PCC PAVEMENT
420106-04	36' (10.8m) JOINTED PCC PAVEMENT
420111-03	PCC PAVEMENT ROUNDOUTS
420201-08	ENTRANCE RAMP TERMINAL (JOINTED PCC RAMP PAVEMENT ADJACENT TO JOINTED PCC MAINLINE PAVEMENT)
420301-05	EXIT RAMP TERMINAL (JOINTED PCC RAMP PAVEMENT ADJACENT TO JOINTED PCC MAINLINE PAVEMENT)
420401-10	BRIDGE APPROACH PAVEMENT CONNECTOR
420701-02	PAVEMENT FABRIC
424001-07	PERPENDICULAR CURB RAMPS FOR SIDEWALKS
424026-01	ENTRANCE / ALLEY PEDESTRIAN CROSSINGS
442001-04	CLASS A PATCHES
442201-03	CLASS C and D PATCHES
483001-04	PCC SHOULDER
515001-03	NAME PLATE FOR BRIDGES
602001-02	CATCH BASIN TYPE A
602011-02	CATCH BASIN TYPE C
602301-04	INLET - TYPE A
602401-03	MANHOLE TYPE A
602406-06	MANHOLE TYPE A 6' (1.8 m) DIAMETER
602421-04	MANHOLE TYPE A 9' (2.7m) DIAMETER
602601-03	PRECAST REINFORCED CONCRETE FLAT SLAB TOP
602701-02	MANHOLE STEPS
630001-10	STEEL PLATE BEAM GUARDRAIL
604001-03	FRAME AND LIDS TYPE 1
604036-02	GRATE TYPE 8
604071-04	FRAME AND GRATE TYPE 20
606001-05	CONCRETE CURB TYPE B AND COMBINATION CONCRETE CURB AND GUTTER
606201-02	TYPE B GUTTER (INLET, OUTLET & ENTRANCE)
635001-01	DELINEATORS
635006-03	REFLECTOR AND TERMINAL MARKER PLACEMENT
635011-02	REFLECTOR MARKER AND MOUNTING DETAILS
637001-05	CONCRETE BARRIER, DOUBLE FACE, 32in. (815mm) HEIGHT
637006-03	CONCRETE BARRIER, DOUBLE FACE, 42in. (1065mm) HEIGHT
642001-02	SHOULDER RUMBLE STRIPS, 16in.
664001-02	CHAIN LINK FENCE
701101-04	OFF-RD OPERATIONS, MULTILANE, 15' (4.5 m) TO 24" (600 mm) FROM PAVEMENT EDGE
701106-02	OFF-RD OPERATIONS, MULTILANE, MORE THAN 15' (4.5 m) AWAY
701301-04	LANE CLOSURE, 2L, 2W, SHORT TIME OPERATIONS
701311-03	LANE CLOSURE 2L, 2W MOVING OPERATIONS - DAY ONLY
701400-07	APPROACH TO LANE CLOSURE, FREEWAY/EXPRESSWAY
701401-08	LANE CLOSURE, FREEWAY / EXPRESSWAY
701406-08	LANE CLOSURE, FREEWAY/EXPRESSWAY, DAY OPERATIONS ONLY
701411-08	LANE CLOSURE, MULTILANE, AT ENTRANCE OR EXIT RAMP, FOR SPEEDS GREATER THAN OR EQUAL TO 45 MPH
701421-06	LANE CLOSURE, MULTILANE, DAY OPERATIONS ONLY, FOR SPEEDS GREATER THAN OR EQUAL TO 45 MPH TO 55 MPH
701422-06	LANE CLOSURE, MULTILANE, FOR SPEEDS GREATER THAN OR EQUAL TO 45 MPH TO 55 MPH
701423-07	LANE CLOSURE, MULTILANE, WITH BARRIER, FOR SPEEDS GREATER THAN OR EQUAL TO 45 MPH TO 55 MPH
701426-06	LANE CLOSURE, MULTILANE, INTERMITTENT OR MOVING OPERATIONS FOR SPEEDS GREATER THAN OR EQUAL TO 45 MPH
701427-02	LANE CLOSURE, MULTILANE, INTERMITTENT OR MOVING OPERATIONS FOR SPEEDS LESS THAN OR EQUAL TO 40 MPH
701428	TRAFFIC CONTROL SETUP AND REMOVAL, FREEWAY / EXPRESSWAY
701446-05	TWO LANE CLOSURE, FREEWAY / EXPRESSWAY
701501-06	URBAN LANE CLOSURE, 2L, 2W, UNDIVIDED
701601-09	URBAN LANE CLOSURE, MULTILANE, 1W OR 2W WITH NONTRAVERSABLE MEDIAN
701901-03	TRAFFIC CONTROL DEVICES
704001-07	TEMPORARY CONCRETE BARRIER
720001-01	SIGN PANEL MOUNTING DETAILS
720006-04	SIGN PANEL ERECTION DETAILS
728001-01	TELESCOPING STEEL SIGN SUPPORT
729001-01	APPLICATIONS OF TYPES A & B METAL POSTS (FOR SIGNS & MARKERS)
780001-04	TYPICAL PAVEMENT MARKINGS
781001-03	TYPICAL APPLICATIONS RAISED REFLECTIVE PAVEMENT MARKERS
814001-02	HANDHOLES
880001-01	SPAN WIRE MOUNTED SIGNALS AND FLASHING BEACON INSTALLATION

FILE PATH = D:\60W28-sht-Gennote-01

AECOM
303 EAST WACKER DRIVE, SUITE 1400
CHICAGO, IL 60601-1276
PHONE: (312) 373-7900 FAX: (312) 373-6800

USER NAME = aayeungh	DESIGNED - OPS	REVISED - ⚠ 05/27/2014	
PLOT SCALE = 100.0000 ' / in.	DRAWN - OPS	REVISED -	
PLOT DATE = 5/27/2014	CHECKED - DBM	REVISED -	
	DATE - 04/28/14	REVISED -	

STATE OF ILLINOIS
DEPARTMENT OF TRANSPORTATION

INDEX OF DRAWINGS AND HIGHWAY STANDARDS

SCALE: NONE | SHEET 1 OF 1 SHEETS | STA. | TO STA.

F.A.I. RTE.	SECTION	COUNTY	TOTAL SHEETS	SHEET NO.
90/94/290	2013-010R	COOK	747	2
		CONTRACT NO. 60W28		
		ILLINOIS	FED. AID PROJECT	

A

FILE NAME: pw:\\AECOM-NA-AWS1.aecomonline.local:AECOM_DS02_NA\Documents\01 Americas\Transportation\60269938 Circle\Phase_II\000_CAD\008_Structural\Structural\Structure_EXRW-34\Structure_EXRW-35\Final Plans\EXRW35-62A76-SHT-003

HBM ENGINEERING GROUP, LLC

USER NAME = hassan.issa	DESIGNED - JJS, JMI	REVISED -			
	CHECKED - MI, MAI	REVISED -			
PLOT SCALE = N.T.S	DRAWN - JMI	REVISED -			
PLOT DATE = 1/24/2020	CHECKED - MI, MAI	REVISED -			

STATE OF ILLINOIS
DEPARTMENT OF TRANSPORTATION

EXISTING RECORD DRAWINGS

SHEET NO. AS11-18 OF AS11-23 SHEETS

F.A.I. RTE.	SECTION	COUNTY	TOTAL SHEETS	SHEET NO.
90/94/290	2015-019R	COOK	2155	1420
		CONTRACT NO. 62A76		
		ILLINOIS	FED. AID PROJECT	

11:42:17 AM

FOR INFORMATION ONLY

Bench Mark: Cut square at center of door entrance to 707 W. Harrison St; South side of Harrison St. ±90' west of west line of Des Plaines. Elevation 597.47.
A "t" cut in the SE anchor bolt at the 11th street light N. of Roosevelt on the W. side of Halsted. Elev. = 594.06

Existing Structure: None.

Traffic Control: Traffic to be maintained on existing SN 016-2449 (NB I-90/94 to WB I-290) during construction.

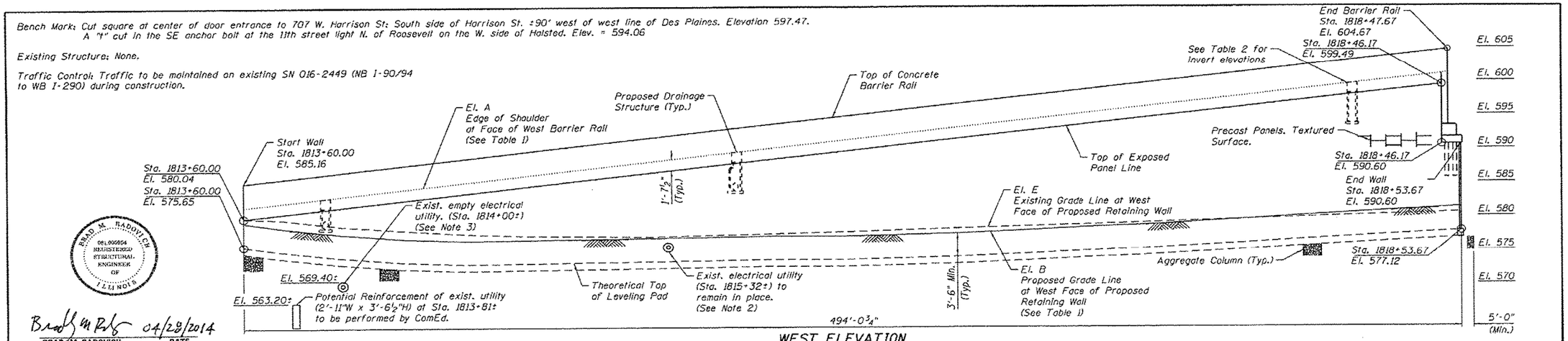

WEST ELEVATION

BRAD M. RADOVICH
061.005854
REGISTERED
STRUCTURAL
ENGINEER
OF
ILLINOIS

Brad M Rad 04/23/2014
BRAD M. RADOVICH DATE
LICENSE EXPIRES 11/30/2014

APPROVED
For Structural Adequacy Only
D. Carl Peterzey
Engineer of Bridges & Structures

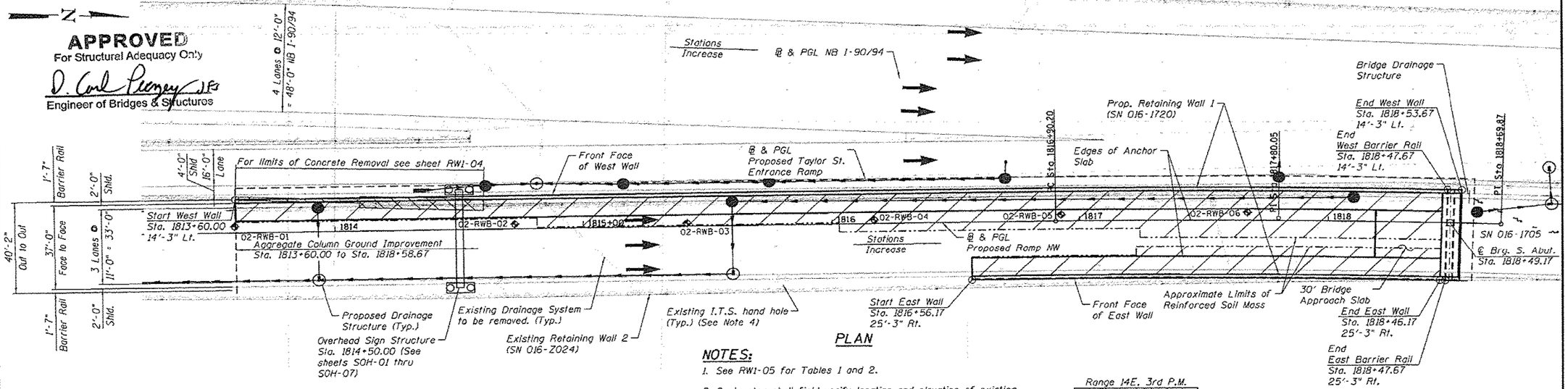

PLAN

NOTES:

1. See RW1-05 for Tables 1 and 2.
2. Contractor shall field verify location and elevation of existing utility. If utility passes through proposed MSE panels or leveling pad, wall supplier shall design break in wall and/or leveling pad to accommodate. See details, RW1-09.
3. Existing 15" ComEd pipe is empty. Contractor shall coordinate removal with ComEd.
4. Existing I.T.S. hand hole to be abandoned in place. See I.T.S. plans for details.

LEGEND:

Combined Sewer	Gas Line —G—	Limits of Soil Reinforcement	
Electric —E—	Fire Hydrant	Limits of Ground Improvement	
Fiber Optic —FO—	Light Pole		
Ex. Storm Sewer	Soil Boring Location	Limits of Concrete Removal	
Water Line —W—	Prop. Storm Sewer		

DESIGN STRESSES

FIELD UNITS
f'c = 3,500 psi (Cast-In-Place)
fy = 60,000 psi (Reinforcement)

PRECAST UNITS
f'c = 4,500 psi (Precast Panels)
fy = 60,000 psi (Reinforcement)

DESIGN SPECIFICATIONS

2012 AASHTO LRFD Bridge Design Specifications
6th Edition with 2013 Interim Revisions

Range 14E. 3rd P.M.

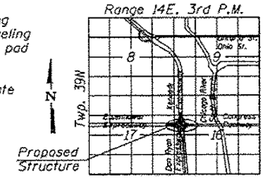

LOCATION SKETCH

GENERAL PLAN & ELEVATION
RETAINING WALL 1
F.A.I. RTE. 90/94/290 - SECTION 2013-010R
COOK COUNTY
STATION 1813+60.00 TO 1818+53.67
STRUCTURE NO. 016-1720

USER NAME = dunkerleyb	DESIGNED - DEV	REVISED	
	CHECKED - ATB	REVISED	
PLOT SCALE = N.T.S.	DRAWN - BRD	REVISED	
PLOT DATE = 4/28/2014	CHECKED - EJO	REVISED	

AECOM

STATE OF ILLINOIS
DEPARTMENT OF TRANSPORTATION

SHEET NO. RW1-01 OF RW1-17 SHEETS

F.A.I. RTE.	SECTION	COUNTY	TOTAL SHEETS	SHEET NO.
90/94/290	2013-010R	COOK	747	519
		CONTRACT NO. 60W28		
		ILLINOIS FED. AID PROJECT -NUMBER-		

0161720-60W28-SOI-GPE

FILE NAME: pw:\AECOM-NA-AWS1.aecomonline.local:AECOM_DS02_NA\Documents\01 Americas\Transportation\60269938 Circle\Phase_II\000_CADD\008_StructuralStructure_EXRW-34\Structure_EXRW-35\Final Plans\EXRW35-62A76-SHT-003

11:42:48 AM

HBM ENGINEERING GROUP, LLC

USER NAME = hassan.issa	DESIGNED - JJS, JMI	REVISED -	
	CHECKED - MI, MAI	REVISED -	
PLOT SCALE = N.T.S	DRAWN - JMI	REVISED -	
PLOT DATE = 1/24/2020	CHECKED - MI, MAI	REVISED -	

STATE OF ILLINOIS
DEPARTMENT OF TRANSPORTATION

EXISTING RECORD DRAWINGS

SHEET NO. AS11-19 OF AS11-23 SHEETS

F.A.I. RTE.	SECTION	COUNTY	TOTAL SHEETS	SHEET NO.
90/94/290	2015-019R	COOK	2155	1421
		CONTRACT NO. 62A76		
		ILLINOIS FED. AID PROJECT		

FOR INFORMATION ONLY

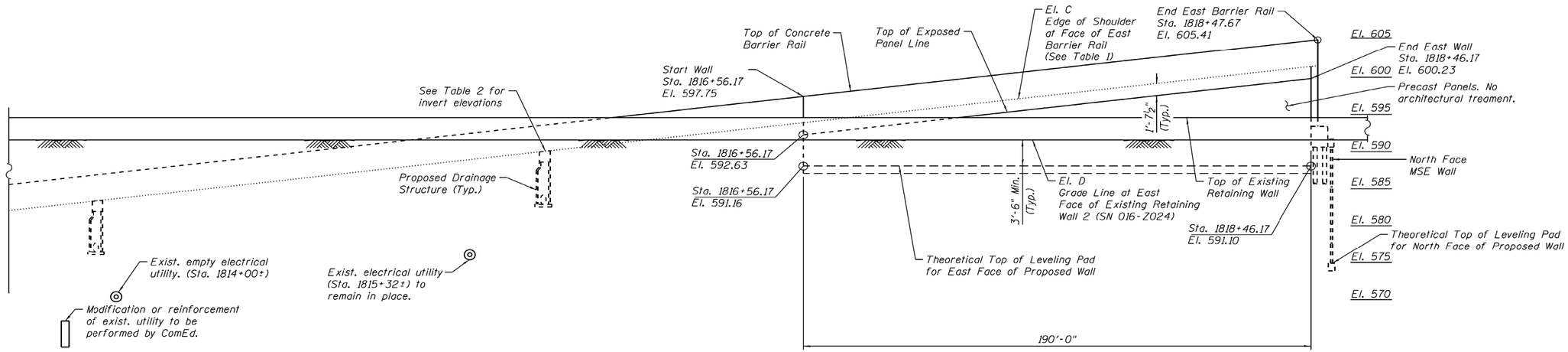

EAST ELEVATION

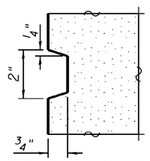

REVEAL DETAIL

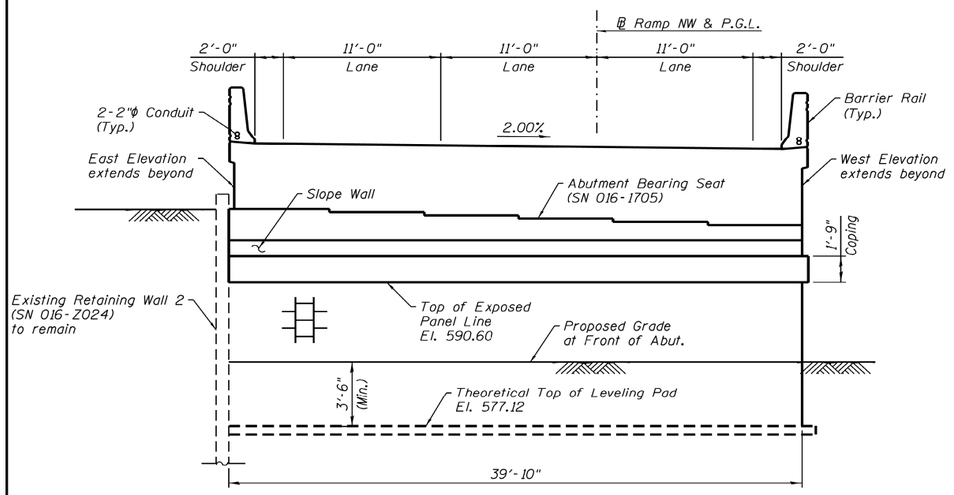

NORTH FACE ELEVATION

(Facing South)

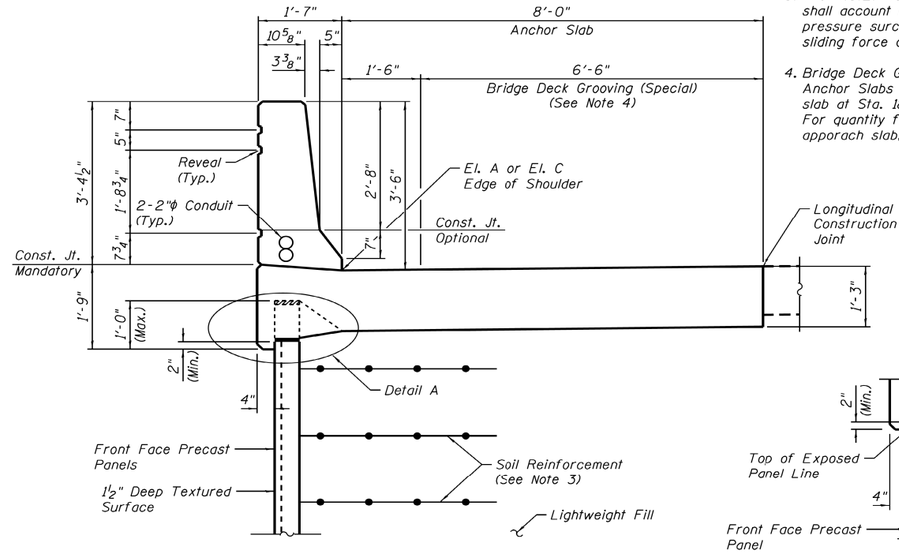

TYPICAL MSE BARRIER RAIL SECTION

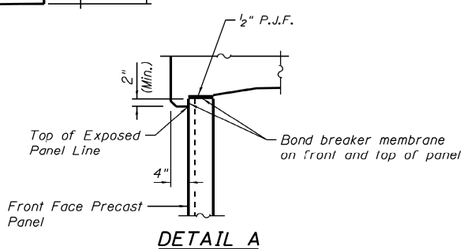

DETAIL A

NOTES:

1. See Sheet RW1-05 for Tables 1 & 2.
2. Anchor Slabs on West and East sides of Ramp NW end at Sta. 1818+46.17 where they overlap the abutment backwall by 6". 30' Bridge Approach Slab lays between the anchor slabs.
3. The M.S.E. wall supplier's internal stability design shall account for the anchor slab's bearing pressure surcharge of 1.0 ksf and horizontal sliding force of 0.67 kips/ft of wall.
4. Bridge Deck Grooving (Special) extends from start of Anchor Slabs at Sta. 1818+46.17 to end of approach slab at Sta. 1818+16.17 on both east and west sides. For quantity for Bridge Deck Grooving (Special) on the apporach slab, see NW Flyover plans. (SN 016-1705)

0161720-60W28-S02-GenNote

AECOM	USER NAME = dunkerleyb	DESIGNED - DEV	REVISED	
		CHECKED - ATB	REVISED	
	PLOT SCALE = N.T.S.	DRAWN - BRD	REVISED	
	PLOT DATE = 4/28/2014	CHECKED - EJO	REVISED	

STATE OF ILLINOIS
DEPARTMENT OF TRANSPORTATION

NORTH & EAST ELEVATIONS
STRUCTURE NO. 016-1720
SHEET NO. RW1-02 OF RW1-17 SHEETS

F.A.I. RTE.	SECTION	COUNTY	TOTAL SHEETS	SHEET NO.
90/94/290	2013-010R	COOK	747	520
		CONTRACT NO. 60W28		
	ILLINOIS FED. AID PROJECT -NUMBER-			

HBM ENGINEERING GROUP, LLC	USER NAME = hassan.issa	DESIGNED - JJS, JMI	REVISED -	
		CHECKED - MI, MAI	REVISED -	
	PLOT SCALE = N.T.S	DRAWN - JMI	REVISED -	
	PLOT DATE = 1/24/2020	CHECKED - MI, MAI	REVISED -	

STATE OF ILLINOIS
DEPARTMENT OF TRANSPORTATION

EXISTING RECORD DRAWINGS
SHEET NO. AS11-200FAS11-23 SHEETS

F.A.I. RTE.	SECTION	COUNTY	TOTAL SHEETS	SHEET NO.
90/94/290	2015-019R	COOK	2155	1422
		CONTRACT NO. 62A76		
	ILLINOIS FED. AID PROJECT			

FILE NAME: pw:\\AECOM-NA-AWS1.aecomonline.local:AECOM_DS02_NA\Documents\01 Americas\Transportation\60269938 Circle\Phase_1\000_CAD\008_Structural\Structure_EXRW-34\Structure_EXRW-35\Final Plans\EXRW35-62A76-SHT-003
11:43:19 AM

FOR INFORMATION ONLY

GENERAL NOTES:

1. Reinforcement bars designated (E) shall be epoxy coated.
2. Slip forming of the barrier rails is not allowed.
3. The Contractor shall exercise extreme caution during construction to make certain that construction activities, live load surcharge and other loads applied to the structures will not have detrimental effects on the adjacent building and retaining wall foundations. See Special Provision for Construction Vibration Monitoring.
4. Protective Coat shall be applied to the designated areas of Anchor Slabs, Barrier Rails, and MSE Coping.
5. Stations and Offsets are measured from the Baseline of Ramp NW to the Front Face of MSE wall panels.
6. MSE Supplier to design load transfer systems within reinforced soil mass to accommodate drainage structures and abutment foundations.
7. MSE Wall lengths measured along front face of precast panels unless noted otherwise.
8. Contractor shall field verify location of existing footings and underground utilities and shall take all precautions to protect them during ground improvement, construction of the wall, and final condition of the ramp. Any damages to the existing structures shall be the responsibility of the Contractor.
9. Quantity for Lightweight Cellular Concrete Fill includes reinforced soil mass and fill area beneath roadway. Type is specified as Class II Lightweight Fill.
10. See Special Provision for Mechanically Stabilized Earth Retaining Wall, Special for design and construction requirements.
11. Anchor Slabs and Barrier Rails shall be paid for as Concrete Superstructure.
12. For drainage structure location, type, and size, see Drainage Sheets.
13. Repairs to existing Retaining Wall 2 (SN 016-2024) shall be completed prior to installation of MSE fill ramp.

TOTAL BILL OF MATERIAL:

	DESCRIPTION	UNIT	TOTAL
	CONCRETE REMOVAL	CU. YD.	53
	STRUCTURE EXCAVATION	CU. YD.	1,108
	CONCRETE SUPERSTRUCTURE	CU. YD.	402
	BRIDGE DECK GROOVING (SPECIAL)	SQ. YD.	44
	PROTECTIVE COAT	SQ. YD.	960
	REINFORCEMENT BARS, EPOXY COATED	POUND	60,520
	SLOPE WALL 4"	SQ. YD.	39
	NAME PLATES	EACH	1
C	LIGHTWEIGHT CELLULAR CONCRETE FILL	CU. YD.	9,460
	AGGREGATE COLUMN GROUND IMPROVEMENT	L. SUM	0.58
	MECHANICALLY STABILIZED EARTH RETAINING WALL, SPECIAL	SQ. FT.	8,279

SUGGESTED SEQUENCE OF CONSTRUCTION:

1. Modify existing Retaining Wall 2 (SN 016-2024) foundation as directed.
2. Install piles for South Abutment of NW Flyover (SN 016-1705).
3. Repair front face of existing Retaining Wall 2 (SN 016-2024) as required on plans.
4. Excavate for construction of proposed Retaining Wall 1 (SN 016-1720).
5. Remove portions of existing Taylor St. Exit Ramp wall as directed.
6. Install Aggregate Column Ground Improvement.
7. Begin installing and filling West and North Elevations of Retaining Wall 1 (SN 016-1720) up to elevation of leveling pad of East Elevation. Backfill and replace roadway of Taylor St. Exit Ramp.
8. Complete South Abutment of NW Flyover (SN 016-1705).
9. Complete West Elevation and install East Elevation of Retaining Wall 1 (SN 016-1720) simultaneously. Fill between wall faces.
10. Install Anchor Slabs and Barrier Rails on West and East faces.
11. Complete roadway on NW Flyover Ramp (SN 016-1705).

INDEX OF SHEETS:

RW1-01 General Plan and Elevation
RW1-02 North and East Elevations
RW1-03 Total Bill of Material, Index of Sheets and General Notes
RW1-04 Existing Structural Removal
RW1-05 Typical Sections
RW1-06 West Barrier Rail and Anchor Slab
RW1-07 East Barrier Rail and Anchor Slab
RW1-08 MSE Wrap Around Details
RW1-09 Details
RW1-10 Architectural Details - I
RW1-11 Architectural Details - II
RW1-12 Aggregate Column Ground Improvement Details
RW1-13 Boring Logs - I
RW1-14 Boring Logs - II
RW1-15 Boring Logs - III
RW1-16 Boring Logs - IV
RW1-17 Boring Logs - V

CURVE DATA

(Ramp NW)

Prop. Curve P-CIR-NW-4
P.I. Sta. 1817+80.05
Δ = 2°30'39" (Rt.)
D = 1°23'51"
R = 4,100.00'
T = 89.85'
L = 179.68'
E = 0.98'
e = -2.00%
P.C. Sta. = 1816+90.20
P.T. Sta. = 1818+69.87

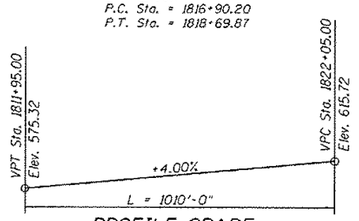

PROFILE GRADE
(along ℄ Ramp NW)

STATION 1813+60.00
BUILT BY
STATE OF ILLINOIS
F.A.I. RTE. 90/94/290-SEC. 2013-010R
LOADING HL-93
STRUCTURE NO. 016-1720

NAME PLATE
See Std. 515001

0161720-60W28-503-GenNote

AECOM	USER NAME = dobozied	DESIGNED - DEV	REVISED C 6/24/2014 DD	STATE OF ILLINOIS DEPARTMENT OF TRANSPORTATION	TOTAL BILL OF MATERIAL, INDEX OF SHEETS & GENERAL NOTES STRUCTURE NO. 016-1720
		CHECKED - ATB	REVISED		
	PLOT SCALE = N.T.S.	DRAWN - BRD	REVISED		SHEET NO. RW1-03 OF RW1-17 SHEETS
	PLOT DATE = 4/28/2014	CHECKED - EJO	REVISED		

F.A.I. RTE.	SECTION	COUNTY	TOTAL SHEETS	SHEET NO.
90/94/290	2013-010R	COOK	747	521
		CONTRACT NO. 60W28		
		ILLINOIS FED. AID PROJECT -NUMBER-		

HBM ENGINEERING GROUP, LLC	USER NAME = hassan.issa	DESIGNED - JJS, JMI	REVISED -	STATE OF ILLINOIS DEPARTMENT OF TRANSPORTATION	EXISTING RECORD DRAWINGS
		CHECKED - MI, MAI	REVISED -		
	PLOT SCALE = N.T.S	DRAWN - JMI	REVISED -		
	PLOT DATE = 1/24/2020	CHECKED - MI, MAI	REVISED -		SHEET NO. AS11-21 OF AS11-23 SHEETS

F.A.I. RTE.	SECTION	COUNTY	TOTAL SHEETS	SHEET NO.
90/94/290	2015-019R	COOK	2155	1423
		CONTRACT NO. 62A76		
		ILLINOIS FED. AID PROJECT		

FILE NAME: pw:\\AECOM-NA-AWS1.aecomonline.local:AECOM_D502_NA\Documents\01 Americas\Transportation\60269938 Circle\Phase_II\000_CAD\008_Structural\Structural\Structure_EXRW-34\Structure_EXRW-35\Final Plans\EXRW35-62A76-SHT-003
11:43:52 AM

FOR INFORMATION ONLY

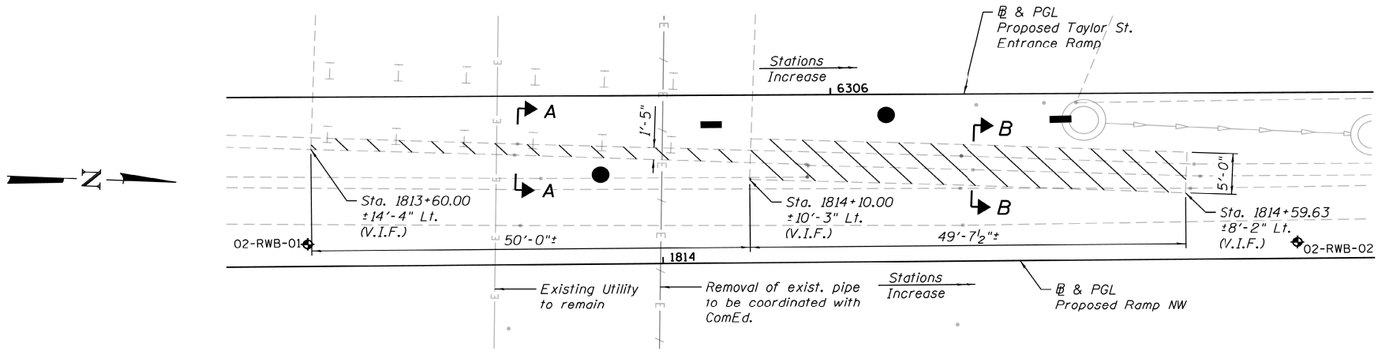

REMOVAL PLAN

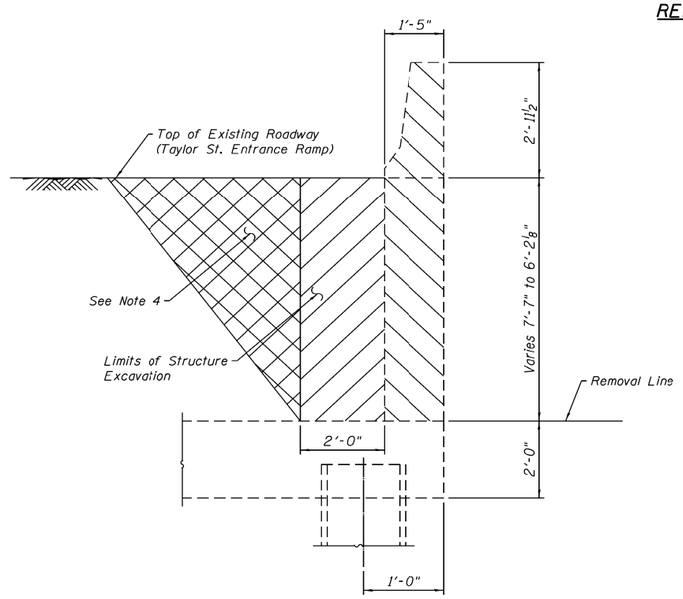

SECTION A-A

Sta. 1813+60.00 to Sta. 1814+10.00
(Facing North)

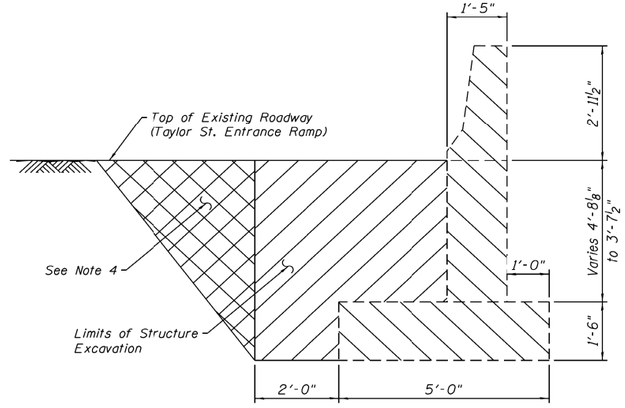

SECTION B-B

Sta. 1814+10.00 to Sta. 1814+59.63
(Facing North)

LEGEND:

Concrete Removal

Structure Excavation

NOTES:

1. Excavation area shall be backfilled to pre-excavation elevation upon installation of west face of proposed wall. Cost of backfill is included in cost of Structure Excavation.
2. See civil plans for replacement of Taylor St. entrance ramp pavement.
3. Stations and offsets are given with respect to baseline of Ramp NW.
4. Overexcavation beyond limits of Structure Excavation not measured for payment.
5. V.I.F. = "Verify in Field"

BILL OF MATERIAL

Item	Unit	Quantity
Concrete Removal	Cu. Yd.	53
Structure Excavation	Cu. Yd.	66

0161720-60W28-S04-GenNote

AECOM

USER NAME = dunkerleyb	DESIGNED - DEV	REVISED	
	CHECKED - ATB	REVISED	
PLOT SCALE = N.T.S.	DRAWN - BRD	REVISED	
PLOT DATE = 4/28/2014	CHECKED - EJO	REVISED	

STATE OF ILLINOIS
DEPARTMENT OF TRANSPORTATION

EXISTING STRUCTURAL REMOVAL
STRUCTURE NO. 016-1720
SHEET NO. RW1-04 OF RW1-17 SHEETS

F.A.I. RTE.	SECTION	COUNTY	TOTAL SHEETS	SHEET NO.
90/94/290	2013-010R	COOK	747	522
		CONTRACT NO. 60W28		
		ILLINOIS	FED. AID PROJECT -NUMBER-	

HBM ENGINEERING GROUP, LLC

USER NAME = hassan.issa	DESIGNED - JJS, JMI	REVISED -	
	CHECKED - MI, MAI	REVISED -	
PLOT SCALE = N.T.S	DRAWN - JMI	REVISED -	
PLOT DATE = 1/24/2020	CHECKED - MI, MAI	REVISED -	

STATE OF ILLINOIS
DEPARTMENT OF TRANSPORTATION

EXISTING RECORD DRAWINGS

SHEET NO. AS11-22OFAS11-23 SHEETS

F.A.I. RTE.	SECTION	COUNTY	TOTAL SHEETS	SHEET NO.
90/94/290	2015-019R	COOK	2155	1424
		CONTRACT NO. 62A76		
		ILLINOIS	FED. AID PROJECT	

FILE NAME: pw:\AECOM-NA-AWS1.aecomonline.local:AECOM_DS02_NA\Documents\01 Americas\Transportation\60269938 Circle\Phase_II\000_CAD\008_Structural\Structure_EXRW-34\Structure_EXRW-35\Final Plans\EXRW35-62A76-SHT-003
11:44:23 AM

FOR INFORMATION ONLY

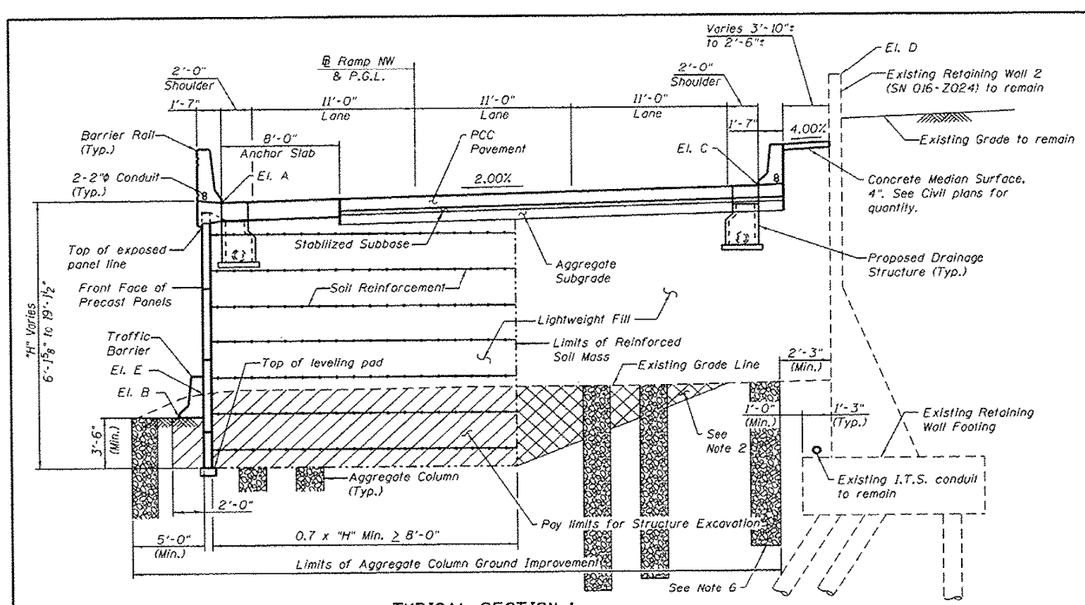

TYPICAL SECTION 1
Sta. 1813+60.00 to Sta. 1816+56.17
(Facing North)

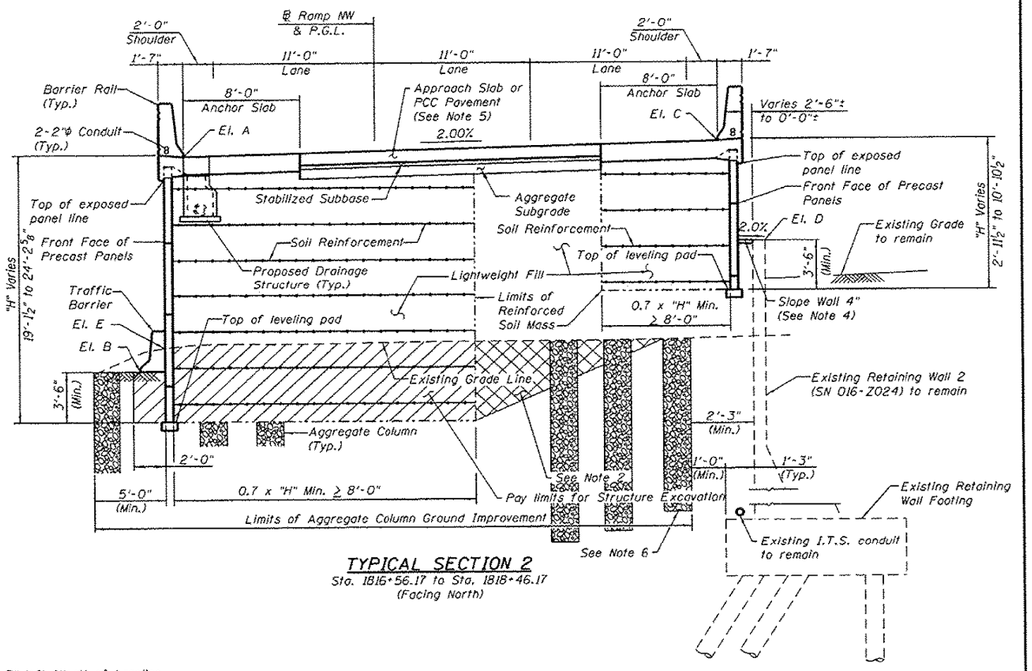

TYPICAL SECTION 2
Sta. 1816+56.17 to Sta. 1818+46.17
(Facing North)

TABLE 1

Station	Elevation A	Elevation B	Elevation C	Elevation D	Elevation E
1813+60.00	581.66	579.15	582.40	594.77	580.00
1813+75.00	582.26	578.40	583.00	594.77	579.49
1814+00.00	583.26	577.42	584.00	594.78	578.78
1814+25.00	584.26	576.78	585.00	594.78	578.19
1814+50.00	585.26	576.47	586.00	594.76	577.66
1814+75.00	586.26	576.49	587.00	594.72	577.36
1815+00.00	587.26	576.67	588.00	594.72	577.25
1815+25.00	588.26	576.80	589.00	594.75	577.18
1815+50.00	589.26	576.94	590.00	594.74	577.37
1815+75.00	590.26	577.09	591.00	594.72	577.59
1816+00.00	591.26	577.28	592.00	594.70	577.83
1816+25.00	592.26	577.49	593.00	594.68	578.10
1816+50.00	593.26	577.76	594.00	594.67	578.37
1816+56.17	593.51	577.82	594.25	594.66	578.44
1816+75.00	594.26	578.02	595.00	594.63	578.64
1817+00.00	595.26	578.42	596.00	594.64	578.90
1817+25.00	596.26	578.82	597.00	594.68	579.15
1817+50.00	597.26	579.33	598.00	594.69	579.45
1817+75.00	598.26	579.75	599.00	594.68	579.75
1818+00.00	599.26	580.03	600.00	594.63	580.03
1818+25.00	600.26	580.29	601.00	594.58	580.29
1818+46.17	601.11	580.52	601.85	594.60	580.52
1818+53.67	601.41	580.62	602.15	594.61	580.62

NOTES:

1. Front of West Face of Wall is offset 14'-3" left (West) of baseline.
   Front of East Face of Wall is offset 25'-3" right (East) of baseline.
2. If contractor elects to overexcavate beyond limits of Structure Excavation, this area shall be backfilled with Lightweight Fill. Overexcavation, additional Lightweight Fill or Aggregate Column Ground Improvement placed in the overexcavation area will not be measured for payment. ℄C
3. Contractor shall verify in field location of Existing Retaining Wall footing and existing utilities prior to placement of Aggregate Column Ground Improvement.
4. Fill void between proposed wall and existing wall with Lightweight Fill. Cap with Slope Wall and Seal with ½" Preformed Joint Filler per Section 1051.09, cost included in Slope Wall 4" pay item. This applies to Typical Section 2 only.
5. Approach Slab for NW Flyover (SN 016-1705) is between Anchor Slabs from Sta. 1818+16.17 to Sta. 1818+46.17. See bridge plans.
6. Contractor's design of aggregate columns shall shorten columns and vary spacing and/or diameter to avoid conflict with existing wall's battered pile foundation. Piles shall not be damaged.

Elevation A - Edge of Shoulder at Face of West Barrier Rail

Elevation B - Proposed Grade Line at West Face of Proposed Retaining Wall

Elevation C - Edge of Shoulder at Face of East Barrier Rail

Elevation D - Top of Existing Retaining Wall

Elevation E - Existing Grade Line at West Face of Proposed Retaining Wall

TABLE 2

Station	Offset	Downstream Elevation
1813+93.00	13'-0" Lt.	577.02
1813+93.00	21'-6" Rt.	576.38
1815+60.00	13'-0" Lt.	583.70
1815+60.00	21'-6" Rt.	583.06
1818+10.00	13'-0" Lt.	593.70

BILL OF MATERIAL

Item	Unit	Quantity
Structure Excavation	Cu. Yd.	1,042
Bridge Deck Grooving (Special)	Sq. Yd.	44
Slope Wall 4"	Sq. Yd.	30
℄C Lightweight Cellular Concrete Fill	Cu. Yd.	9,460
Mechanically Stabilized Earth Retaining Wall, Special	Sq. Ft.	8,279

0161720-60W28-505-Contsht

AECOM	USER NAME = dabezicd	DESIGNED - DEV	REVISED ℄C 6/24/2014 DD	STATE OF ILLINOIS DEPARTMENT OF TRANSPORTATION
		CHECKED - ATB	REVISED	
	PLOT SCALE = N.T.S.	DRAWN - BRD	REVISED	
	PLOT DATE = 4/28/2014	CHECKED - EJO	REVISED	

TYPICAL SECTIONS
STRUCTURE NO. 016-1720
SHEET NO. RW1-05 OF RW1-17 SHEETS

F.A.I. RTE.	SECTION	COUNTY	TOTAL SHEETS	SHEET NO.
90/94/290	2013-010R	COOK	747	523
		CONTRACT NO. 60W28		
		ILLINOIS FED. AID PROJECT -NUMBER-		

HBM ENGINEERING GROUP, LLC	USER NAME = hassan.issa	DESIGNED - JJS, JMI	REVISED -	STATE OF ILLINOIS DEPARTMENT OF TRANSPORTATION
		CHECKED - MI, MAI	REVISED -	
	PLOT SCALE = N.T.S	DRAWN - JMI	REVISED -	
	PLOT DATE = 1/24/2020	CHECKED - MI, MAI	REVISED -	

EXISTING RECORD DRAWINGS
SHEET NO. AS11-230FAS11-23 SHEETS

F.A.I. RTE.	SECTION	COUNTY	TOTAL SHEETS	SHEET NO.
90/94/290	2015-019R	COOK	2155	1425
		CONTRACT NO. 62A76		
		ILLINOIS FED. AID PROJECT		

FILE NAME: pw:\\AECOM-NA-AWS1.aecomonline.local:AECOM_DS02_NA\Documents\01 Americas\Transportation\60269938 CirclePhase_II\000_CAD\008_StructuralStructure_EXRW-34\Structure_EXRW-35\Final Plans\EXRW35-62A76-SHT-003
11:44:56 AM

Benchmark: T.B.M. #49 North NE Flange bolt on hydrant on NW corner of 21st St. and Emerald St. Elev. 593.47

Existing Structure: Existing S.N. 016-1111 is a part of the Dan Ryan Expressway Viaduct. The superstructure consists of a reinforced concrete deck supported on steel plate girders with both simple and continuous spans. The substructure consists of multiple column concrete piers supported on concrete caissons. The structure was built in 1961 and opened to traffic in 1962. Bridge deck reconstruction and widening were performed in 1988. The structure has an overall length of 942'-1¼" (℄ Pier to ℄ Pier) and an out-to-out deck width which varies from 71'-2¼" (south end) to 67'-2" (℄ Pier 3 to north end).

Traffic Control: Traffic will be maintained utilizing staged construction.

Salvage: No salvage.

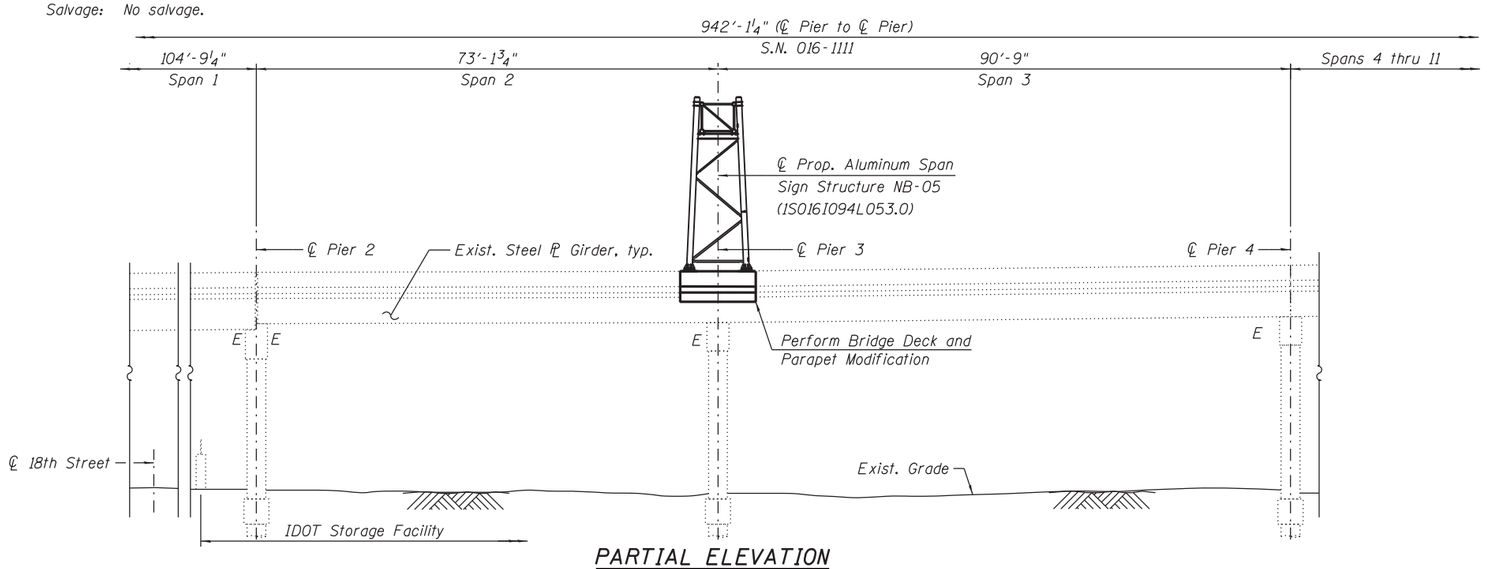

PARTIAL ELEVATION

(Exist. Overhead Span Sign Structure, above Span 2 SB roadway, not shown for clarity)

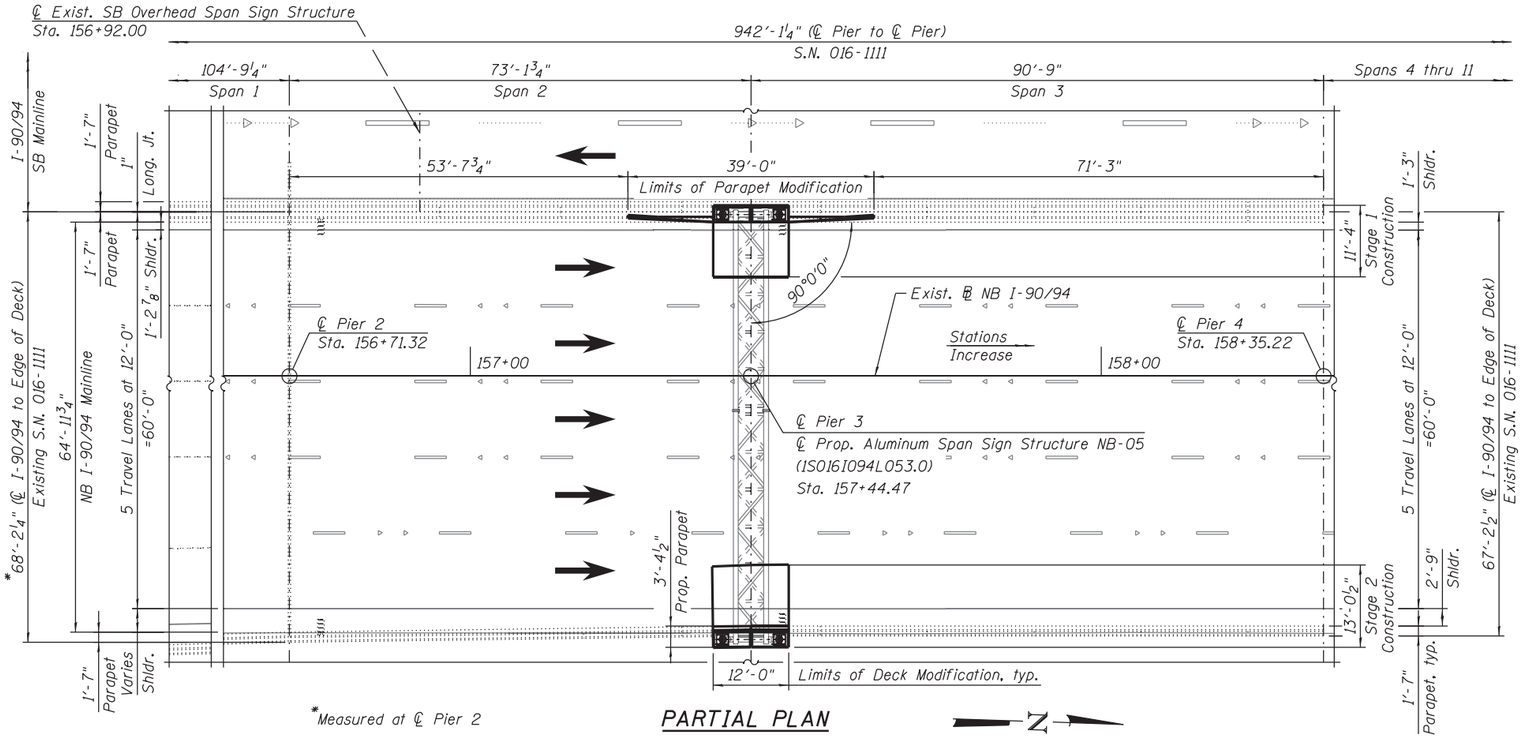

*Measured at ℄ Pier 2

PARTIAL PLAN

DESIGN SPECIFICATIONS

2002 AASHTO Standard Specifications
for Highway Bridges

SCOPE OF WORK

1. Provide protective shield within limits indicated on the plans.
2. Remove portions of bridge deck and parapets at the locations indicated, and per the details shown, in the plans.
3. Remove and replace scupper within the limits of bridge modification.
4. Install anchor bolts for proposed sign structure support, reconstruct bridge deck and parapets per the details shown in the plans, perform bridge deck grooving and apply protective coat to new concrete as required.
5. Repaint lane markings as required.

NOTES:

1. For General Notes, Index of Sheets, Total Bill of Material and Profile Grade Lines, see Sheet S12-02
2. For additional details, see Roadway and/or Maintenance of Traffic Plans.

STATE OF ILLINOIS
MOUSSA A. ISSA
081-005738
CHICAGO, ILLINOIS
LICENSED STRUCTURAL ENGINEER

SIGNED Moussa A. Issa
DR. MOUSSA A. ISSA, S.E., IL. LIC. NO. 081-005738
EXPIRES 11-30-2020
DATE 1/29/2020 FOR SHEETS S12-01 THRU S12-09
AND AS12-01 THRU AS12-49
(TOTAL OF 58 SHEETS)

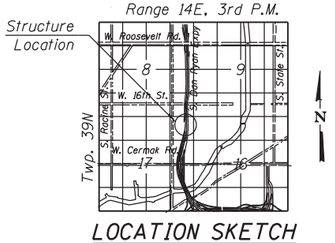

LOCATION SKETCH

GENERAL PLAN AND ELEVATION
NB & SB I-90/94 - FROM 16TH ST. TO 18TH ST.
F.A.I. RTE. 90/94- SECTION 2015-019R
COOK COUNTY
STA. 157+44.47
STRUCTURE NO. 016-1111

HBM ENGINEERING GROUP, LLC

USER NAME = elizabath.kurian	DESIGNED - WM	REVISED -	STATE OF ILLINOIS DEPARTMENT OF TRANSPORTATION	
	CHECKED - MAI, JJS	REVISED -		
PLOT SCALE = N.T.S	DRAWN - WM	REVISED -		
PLOT DATE = 1/29/2020	CHECKED - MAI, JJS	REVISED -		SHEET NO. S12-01 OF S12-12 SHEETS

F.A.I. RTE.	SECTION	COUNTY	TOTAL SHEETS	SHEET NO.
90/94/290	2015-019R	COOK	2155	1426
		CONTRACT NO. 62A76		
	ILLINOIS	FED. AID PROJECT		

FILE NAME: pw:\\AECOM-NA-AWS1.aecomonline.local:AECOM_D502_NAIDocuments\01 Americas\Transportation\60269938 Circle\Phase_II\000_CAD\008_Structural\Sign Structures\62A76 Sign Structure\62A76-Span-55320-GPE.dgn
4:46:01 PM

GENERAL NOTES:

1. No field welding is permitted except as specified in the contract documents.

2. Reinforcement bars designated (E) shall be epoxy-coated.

3. Prior to pouring the new concrete deck, all heavy or loose rust, loose mill scale, and other loose or potentially detrimental foreign material shall be removed from the surfaces in contact with concrete. Tightly adhered Paint may remain unless otherwise noted. Removal shall be accomplished by methods that will not damage the steel and the cost will be included in the pay item covering removal of the existing concrete.

   As directed by the Engineer, existing construction accessories welded to the top flange of beams and girders shall be removed. The weld areas shall be ground flush and inspected for cracks using magnetic particle testing (MT) or dye penetrant testing (PT) by qualified personnel approved by the Engineer. Any cracks that cannot be removed by grinding $\frac{1}{4}$ in. deep shall be identified and reported to the Bureau of Bridges and Structures for further disposition. The cost of removing welded accessories, grinding and inspecting weld areas and grinding cracks will be paid for according to Article 109.04 of the Standard Specifications.

4. If the Contractor elects to use cantilever forming brackets on the exterior beams or girders, the brackets shall be placed at the same locations as required for the hardwood blocks in Article 503.06(b) of the Standard Specifications. If additional cantilever forming brackets are required, hardwood blocking shall be wedged between the exterior and first interior beam at each of these additional bracket locations.

5. Plan dimensions and details relative to existing plans are subject to nominal construction variations. The Contractor shall field-verify existing dimensions and details affecting new construction and make necessary approved adjustments prior to construction or ordering of materials. Such variations shall not be cause for additional compensation for a change in scope of the work; however, the Contractor will be paid for the quantity actually furnished at the unit price bid for the work.

6. The existing structural steel coating contains lead. The Contractor shall take appropriate precautions to deal with the presence of lead on this project.

7. Existing structural steel shall only be cleaned and painted as required by the Special Provision "Cleaning and Painting Contact Surface Areas of Existing Steel Structures".

8. The Contractor shall take all necessary precautions for the protection of passing vehicles, parked vehicles, equipment and pedestrians from falling objects and/or materials until completion of the work.

9. All of the construction work shown for this bridge will be completed utilizing temporary lane closures in accordance with the Maintenance of Traffic Special Provision and the provided details. It shall be the Contractor's responsibility to ensure that, before such temporary work areas are open to traffic, all loose items are removed or secured and the area is safe for opening to traffic. See Maintenance of Traffic Special Provision for additional information.

10. No concrete cutting shall be permitted until the cutting limits have been outlined by the Contractor and approved by the Engineer.

11. Existing reinforcement which is to be incorporated into the new construction shall be blast-cleaned to gray metal, straightened (without heating), and cut to fit. Cost shall be included with "Concrete Removal."

12. All exposed concrete edges shall have a $\frac{3}{4}$" x 45° chamfer, except where shown otherwise.

INDEX OF SHEETS

S12-01	General Plan and Elevation
S12-02	Total Bill of Material, Index of Sheets and General Notes
S12-03	Stage Construction (Sheet 1 of 2)
S12-04	Stage Construction (Sheet 2 of 2)
S12-05	Deck Partial Removal Plan and Sections
S12-06	Deck Partial Reconstruction Plans
S12-07	East and West Parapet - Partial Plan and Elevation
S12-08	Deck Reconstruction Sections and Details
S12-09	Existing Parapet Modification Details
S12-10	Drainage Scupper (Special) (Sheet 1 of 2)
S12-11	Drainage Scupper (Special) (Sheet 2 of 2)
S12-12	Drainage System Partial Modification Details
AS12-01 thru AS12-49	Existing Record Drawings

TOTAL BILL OF MATERIAL

ITEM	UNIT	TOTAL
CONCRETE REMOVAL	CU YD	12.1
PROTECTIVE SHIELD	SQ YD	72
CONCRETE SUPERSTRUCTURE	CU YD	23.4
BRIDGE DECK GROOVING	SQ YD	23
PROTECTIVE COAT	SQ YD	73
REINFORCEMENT BARS, EPOXY COATED	POUND	5,120
DRAINAGE SCUPPERS (SPECIAL)	EACH	1
DRAINAGE SYSTEM MODIFICATION	L SUM	1.0

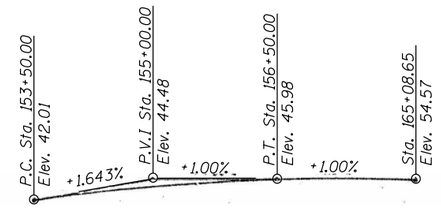

EXISTING PROFILE GRADE

(Along ℄ Exist. NB I-90/94)

FILE NAME: pw:\\AECOM-NA-AWS1.aecomonline.local:AECOM_DS02_NAIDocuments\01 Americas\Transportation\60269938 CirclePhase_II\000_CAD\009_StructuralSign Structures\62A76 Sign Structure\62A76-Span-55321-GenNotes.dgn
4:46:09 PM

HBM ENGINEERING GROUP, LLC

USER NAME = elizabath.kurian		DESIGNED - MAA	REVISED -	
		CHECKED - MAI, JJS	REVISED -	
PLOT SCALE = N.T.S		DRAWN - MAA	REVISED -	
PLOT DATE = 1/29/2020		CHECKED - MAI, JJS	REVISED -	

STATE OF ILLINOIS
DEPARTMENT OF TRANSPORTATION

TOTAL BILL OF MATERIAL, INDEX OF SHEETS AND GENERAL NOTES
STRUCTURE NO. 016-1111
SHEET NO. S12-02 OF S12-12 SHEETS

F.A.I. RTE.	SECTION	COUNTY	TOTAL SHEETS	SHEET NO.
90/94/290	2015-019R	COOK	2155	1427
		CONTRACT NO. 62A76		
	ILLINOIS	FED. AID PROJECT		

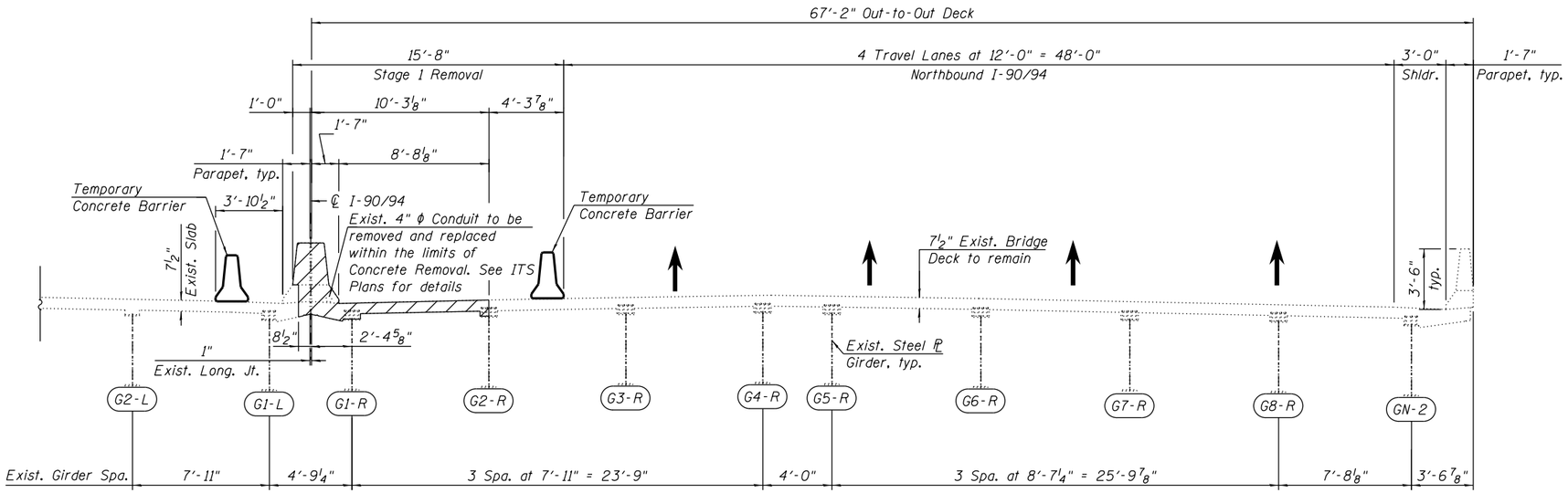

STAGE 1 REMOVAL

(Looking Upstation)
(Section shown at ℄ Pier 3)

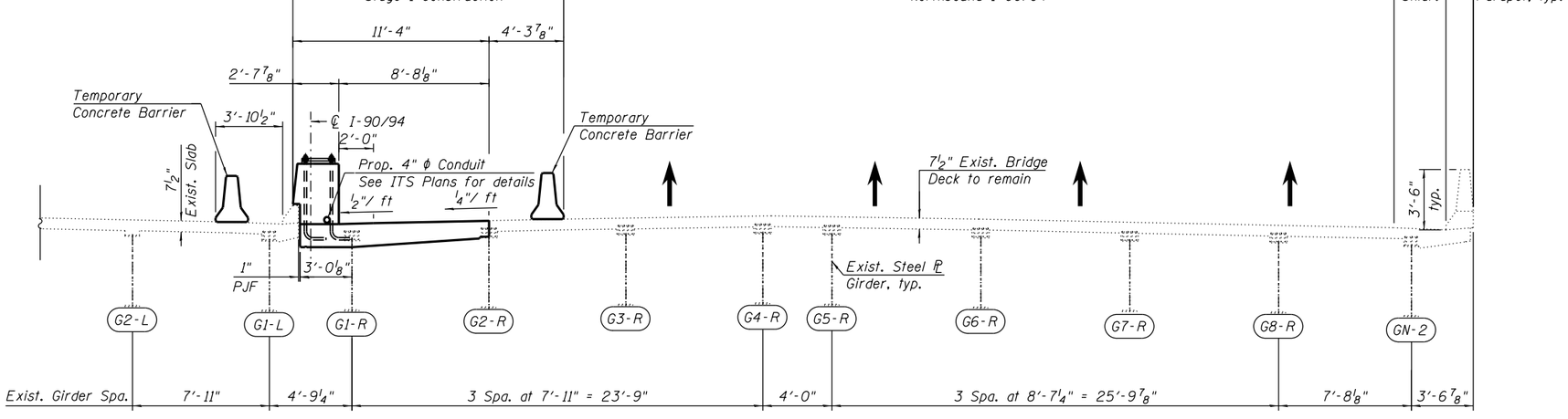

STAGE 1 CONSTRUCTION

(Looking Upstation)
(Section shown at ℄ Pier 3)

STAGE 1 REMOVAL

1. Install temporary concrete barrier as shown to locate construction work area on the west side of the existing northbound structure and the east side of the existing southbound structure.
2. Install protective shield as required.
3. Remove portions of existing bridge deck and parapet within limits, and per the details, shown in the plans.
4. Remove existing scupper within Stage Removal Limits.

STAGE 1 CONSTRUCTION

1. Clean and paint existing structural steel as required by the Special Provision "Cleaning and Painting Contact Surface Areas of Existing Steel Structures".
2. Modify Existing Drainage System as required and install new bridge deck scupper (special).
3. Install anchor bolts for proposed sign structure support.
4. Reconstruct bridge deck and parapets per the details shown on the plans, perform bridge deck grooving and apply protective coat to new concrete as required.
5. Repaint lane marking as required.

NOTE:

1. See Maintenance of Traffic (MOT) Plans for more details.

LEGEND

Concrete Removal

HBM ENGINEERING GROUP, LLC	USER NAME = elizabath.kurian	DESIGNED - MAA,EBK	REVISED -	STATE OF ILLINOIS DEPARTMENT OF TRANSPORTATION	STAGE CONSTRUCTION (SHEET 1 OF 2) STRUCTURE NO. 016-1111
		CHECKED - MAI, JJS	REVISED -		
	PLOT SCALE = N.T.S	DRAWN - EBK	REVISED -		
	PLOT DATE = 1/29/2020	CHECKED - MAI, JJS	REVISED -		SHEET NO. S12-03 OF S12-12 SHEETS

F.A.I. RTE.	SECTION	COUNTY	TOTAL SHEETS	SHEET NO.
90/94/290	2015-019R	COOK	2155	1428
		CONTRACT NO. 62A76		
	ILLINOIS	FED. AID PROJECT		

FILE NAME: pw:\AECOM-NA-AWS1.aecomonline.local:AECOM_DS02_NAIDocuments\01 Americas\Transportation\60269938 Circle\Phase_II\000_CAD\008_Structural\Sign Structures\62A76 Sign Structure\62A76-Span-55322-Stage1.dgn
4:46:19 PM

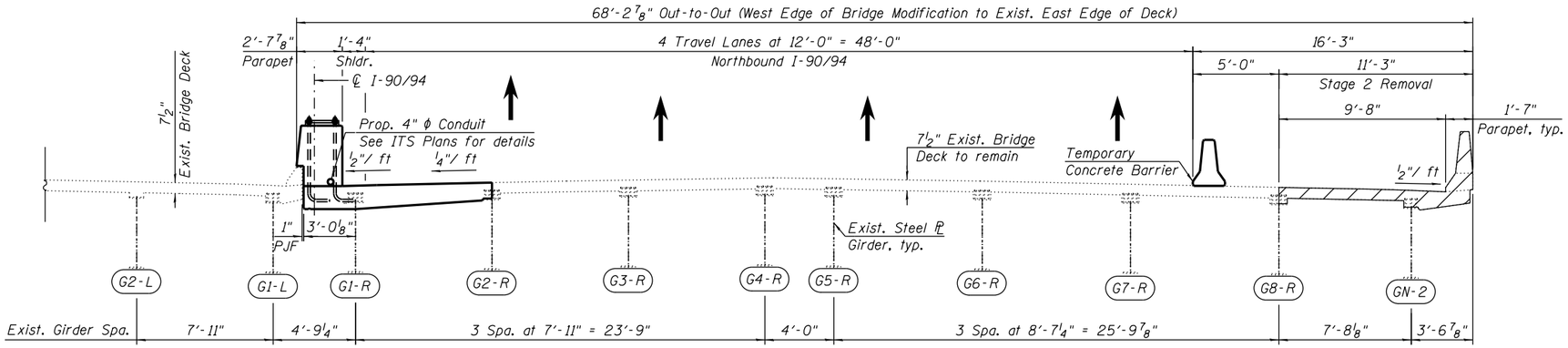

STAGE 2 REMOVAL

(Looking Upstation)
(Section shown at ℄ Pier 3)

STAGE 2 REMOVAL

1. Install temporary concrete barrier as shown to locate construction work area on the east side of the existing northbound structure.
2. Install protective shield as required.
3. Remove portions of existing bridge deck and parapet within limits, and per the details, shown in the plans.

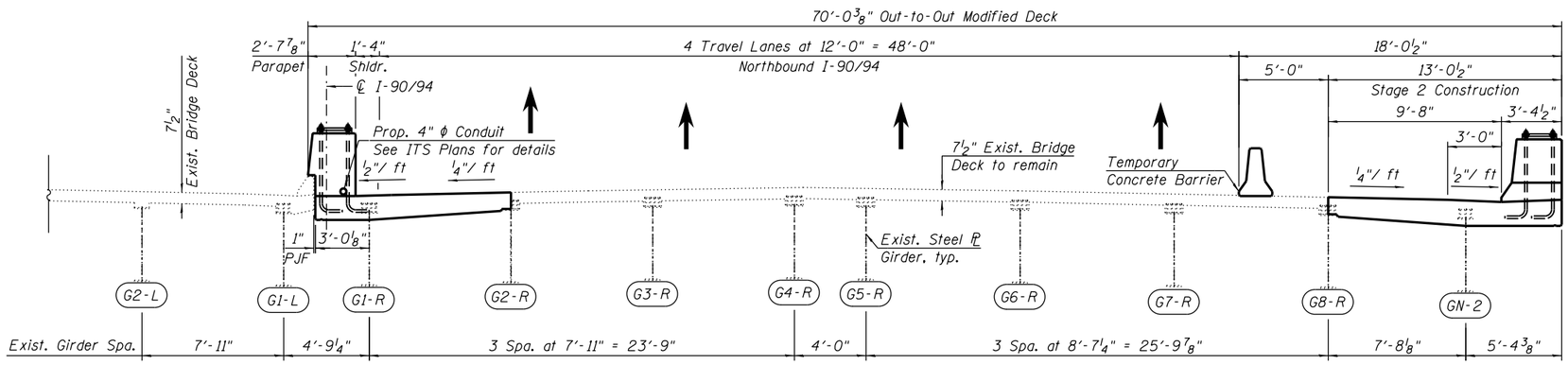

STAGE 2 CONSTRUCTION

(Looking Upstation)
(Section shown at ℄ Pier 3)

STAGE 2 CONSTRUCTION

1. Clean and paint existing structural steel as required by the Special Provision "Cleaning and Painting Contract Surface Areas of Existing Steel Structures".
2. Install anchor bolts for proposed sign structure support.
3. Reconstruct bridge deck and parapets per the details shown on the plans. perform bridge deck grooving and apply protective coat to new concrete as required.
4. Repaint lane markings as required.

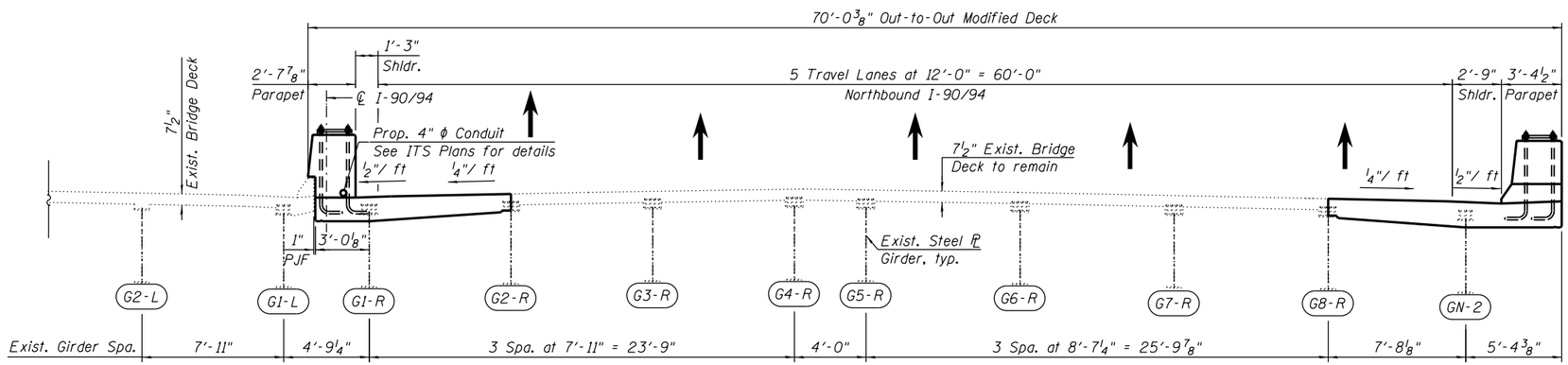

FINAL DECK CROSS-SECTION

(Looking Upstation)
(Section shown at ℄ Pier 3)

NOTE:

1. See Maintenance of Traffic (MOT) Plans for more details.

LEGEND

Concrete Removal

HBM ENGINEERING GROUP, LLC	USER NAME = elizabath.kurian	DESIGNED - MAA,EBK	REVISED -	STATE OF ILLINOIS DEPARTMENT OF TRANSPORTATION	STAGE CONSTRUCTION (SHEET 2 OF 2) STRUCTURE NO. 016-1111
		CHECKED - MAI, JJS	REVISED -		
	PLOT SCALE = N.T.S	DRAWN - MAA,EBK	REVISED -		SHEET NO. S12-04 OF S12-12 SHEETS
	PLOT DATE = 1/29/2020	CHECKED - MAI, JJS	REVISED -		

F.A.I. RTE.	SECTION	COUNTY	TOTAL SHEETS	SHEET NO.
90/94/290	2015-019R	COOK	2155	1429
		CONTRACT NO. 62A76		
		ILLINOIS	FED. AID PROJECT	

FILE NAME: pw:\AECOM-NA-AWS1.aecomonline.local:AECOM_DS02_NA\Documents\01 Americas\Transportation\60269938 Circle\Phase_II\0000_CAD\0008_Structural\Sign Structures\62A76 Sign Structure\62A76-Span-55323-Stage2.dgn
4:46:27 PM

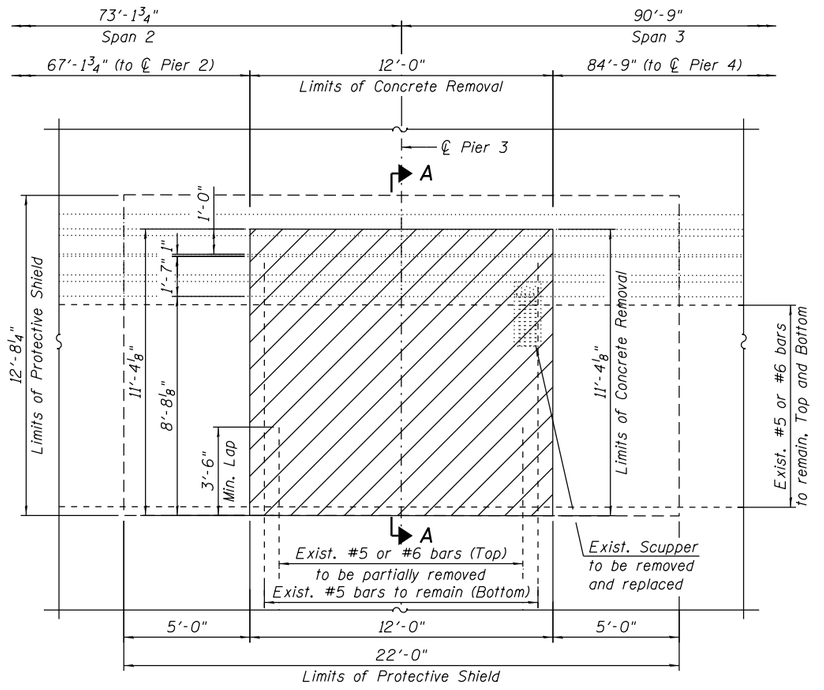

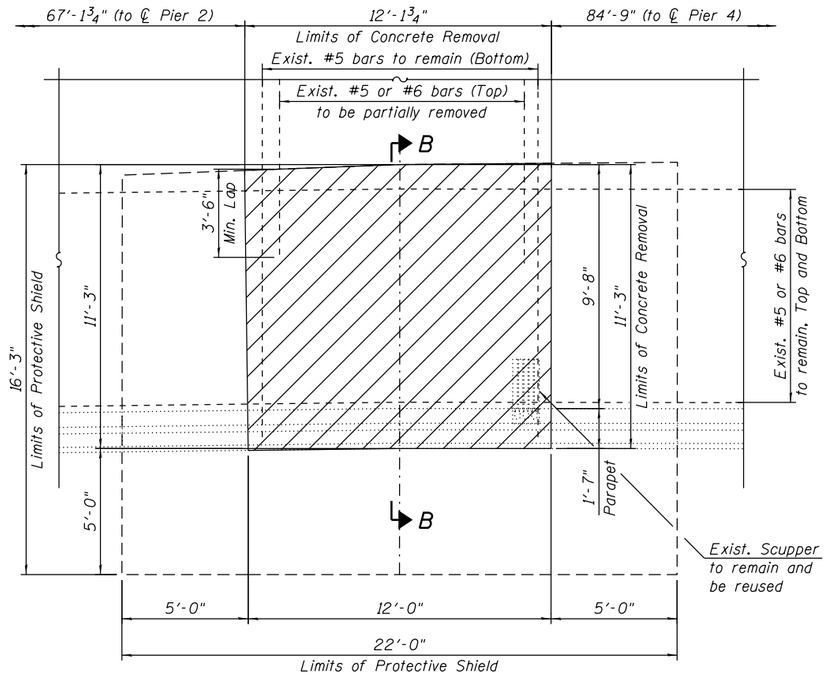

PARTIAL REMOVAL PLAN

(Exist. 4" ϕ ITS conduit not shown for clarity)

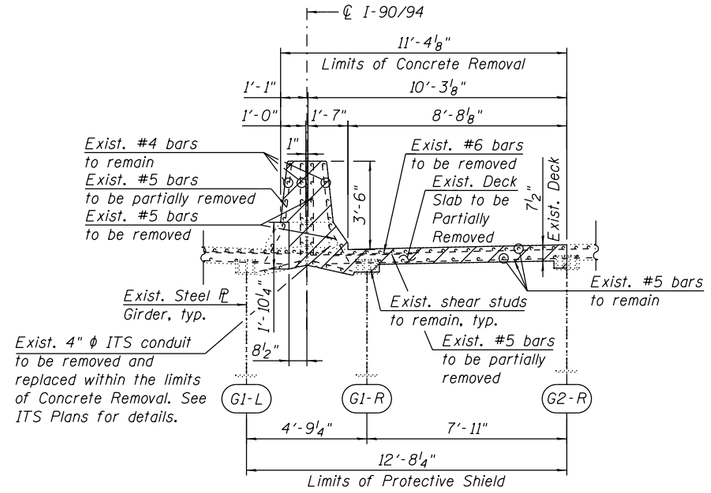

SECTION A-A

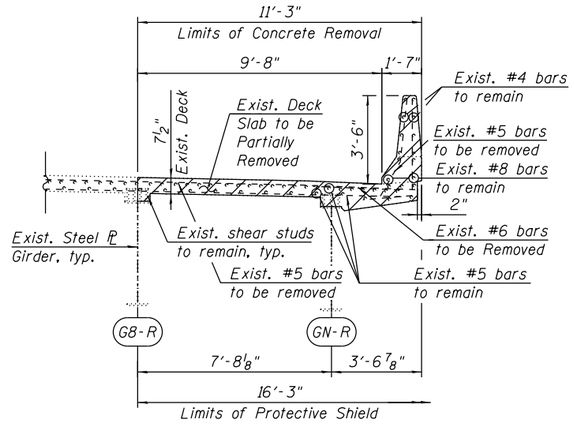

SECTION B-B

BILL OF MATERIAL

ITEM	UNIT	QUANTITY
Concrete Removal	CU YD	11.9
Protective Shield	SQ YD	72

NOTES:

1. Existing reinforcement shall be cleaned and incorporated into the new construction. Cost included with Concrete Removal.
2. For additional removal details, see Sheet S12-09.
3. The Contractor shall exercise extreme caution during concrete removal activities to avoid damage to the existing drainage scuppers to remain. Any damage to the existing drainage scuppers to remain (including anchor studs and other connections to the drainage system or structure) shall be repaired by the Contractor, to the satisfaction of the Engineer, at no cost to the Department.

LEGEND

Concrete Removal

Limits of Protective Shield

FILE NAME: pw:\AECOM-NA-AWS1.aecomonline.local:AECOM_DS02_NA\Documents\01 Americas\Transportation\60269938 Circle\Phase_II\000_CAD\008_Structural\Sign Structures\62A76 Sign Structure\62A76-Span-55324-Removal Plan.dgn
6:14:12 PM

HBM ENGINEERING GROUP, LLC

USER NAME = marlan.agamy	DESIGNED - MAA	REVISED -	STATE OF ILLINOIS DEPARTMENT OF TRANSPORTATION	DECK PARTIAL REMOVAL PLAN AND SECTIONS STRUCTURE NO. 016-1111
	CHECKED - MAI, JJS	REVISED -		
PLOT SCALE = N.T.S	DRAWN - MAA, AMS	REVISED -		SHEET NO. S12-05 OF S12-12 SHEETS
PLOT DATE = 1/29/2020	CHECKED - MAI, JJS	REVISED -		

F.A.I. RTE.	SECTION	COUNTY	TOTAL SHEETS	SHEET NO.
90/94/290	2015-019R	COOK	2155	1430
		CONTRACT NO. 62A76		
		ILLINOIS	FED. AID PROJECT	

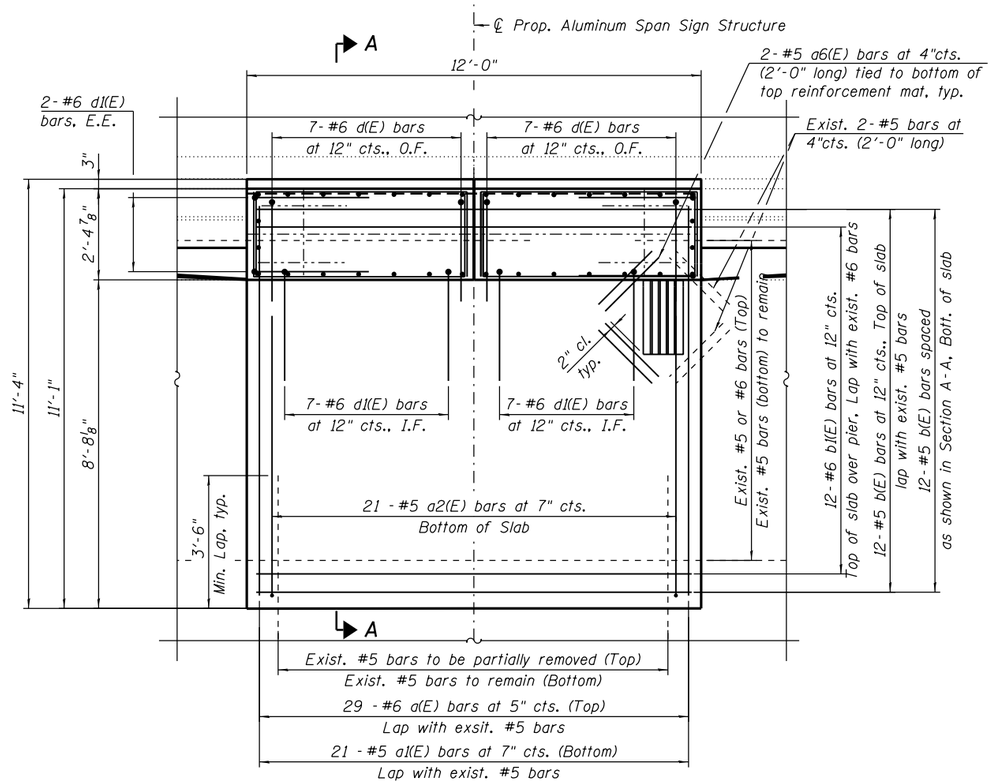

PARTIAL WEST DECK PLAN

(Parapet Reinforcement and 4" ϕ ITS Conduit not shown for clarity)

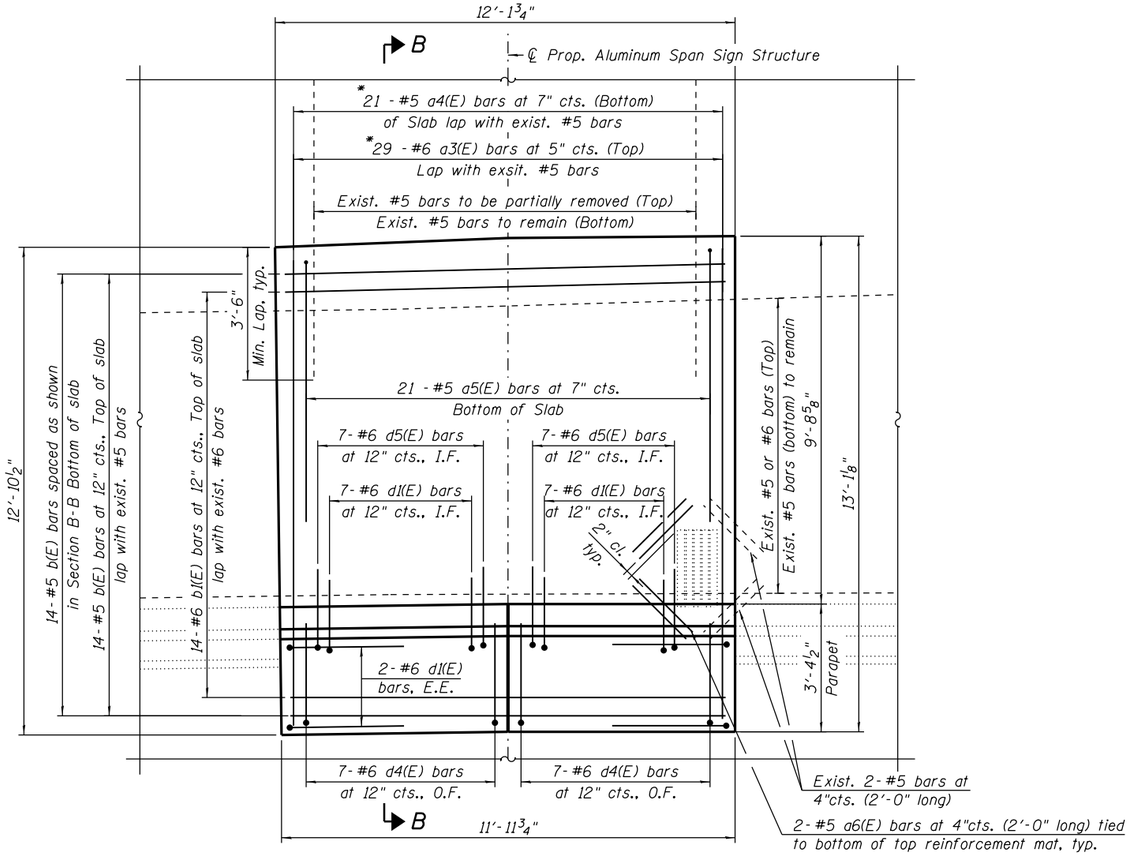

PARTIAL EAST DECK PLAN

(Parapet Reinforcement not shown for clarity)

NOTES:

1. For Total Bill of Materials, see Sheet S12-02.
2. Existing reinforcement which is to be incorporated into the new construction shall be blast cleaned to gray metal, straightened (without heating), and cut to fit. Cost of which shall be included with "Concrete Removal".
3. For Parapet Partial Plan and Elevation, see Sheet S12-07.
4. For Sections A-A and B-B, Details and Bill of Material, see Sheet S12-08.
5. For Parapet Modification Details, see Sheet S12-09.

* Cut bars in field to fit

LEGEND:

O.F. Outside Face

I.F. Inside Face

E.F. Each Face

HBM ENGINEERING GROUP, LLC

USER NAME = elizabath.kurian	DESIGNED - MAA, EBK	REVISED -
	CHECKED - MAI, JJS	REVISED -
PLOT SCALE = N.T.S	DRAWN - MAA,EBK	REVISED -
PLOT DATE = 1/29/2020	CHECKED - MAI, JJS	REVISED -

STATE OF ILLINOIS
DEPARTMENT OF TRANSPORTATION

DECK PARTIAL RECONSTRUCTION PLANS
STRUCTURE NO. 016-1111

SHEET NO. S12-06 OF S12-12 SHEETS

F.A.I. RTE.	SECTION	COUNTY	TOTAL SHEETS	SHEET NO.
90/94/290	2015-019R	COOK	2155	1431
		CONTRACT NO. 62A76		
	ILLINOIS	FED. AID PROJECT		

FILE NAME: pw:\\AECOM-NA-AWS1.aecomonline.local:AECOM_DS02_NADocuments\01 Americas\Transportation\60269938 Circle\Phase_II\000_CAD\008_Structural\Sign Structures\62A76 Sign Structure\62A76-Span-55325-DeckPlan.dgn
4:46:47 PM

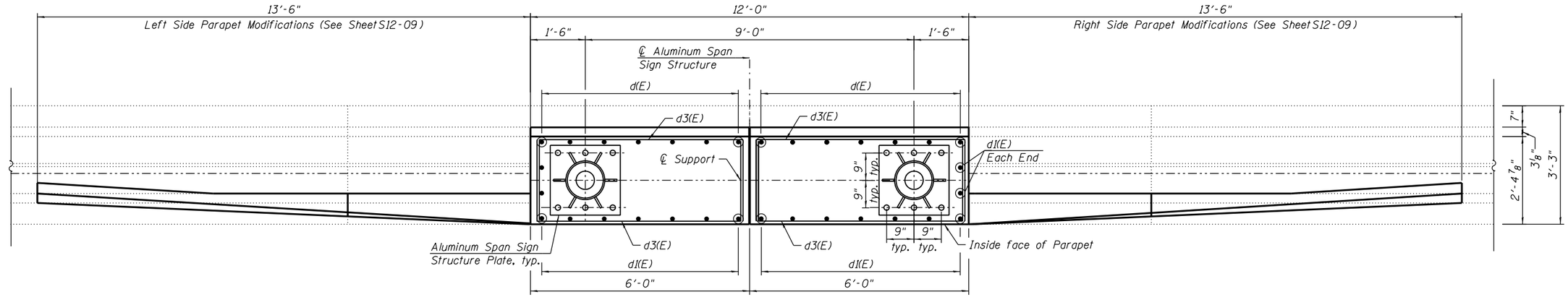

WEST PARAPET PLAN

(4" ϕ ITS Conduit not shown for clarity)

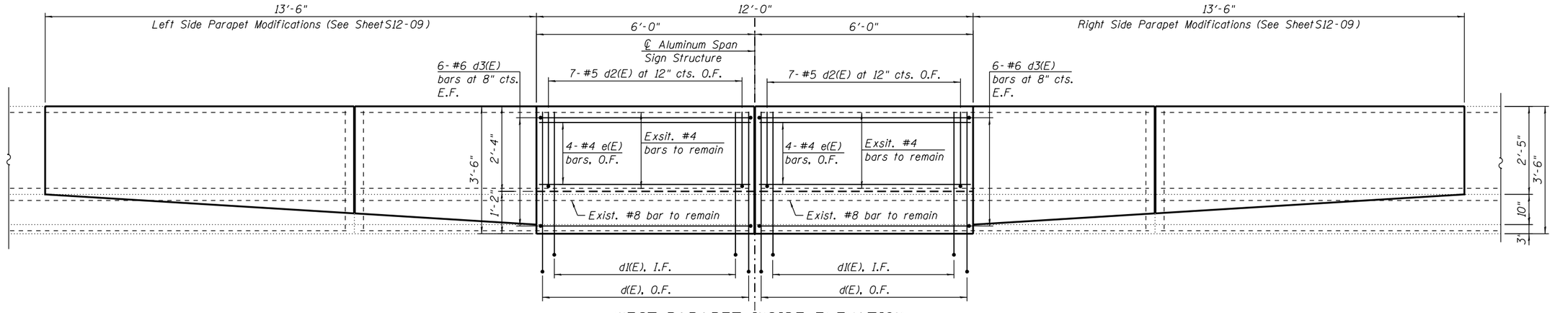

WEST PARAPET INSIDE ELEVATION

(4" ϕ ITS Conduit not shown for clarity)

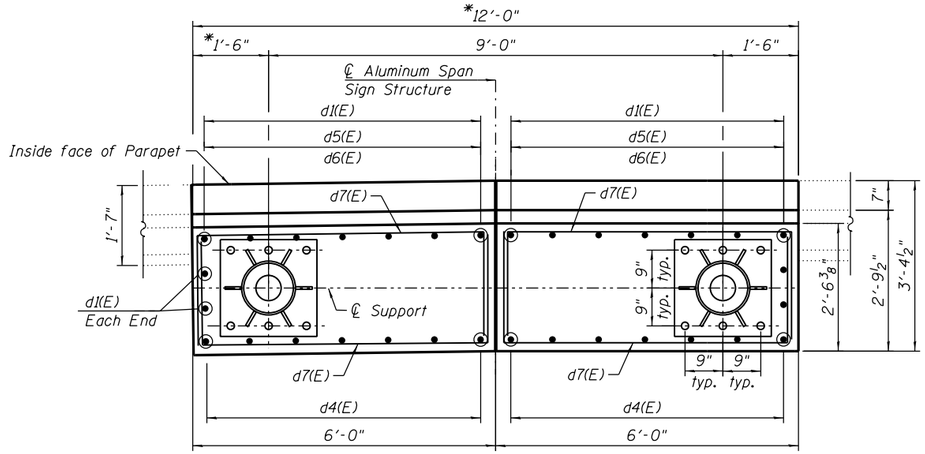

EAST PARAPET PLAN

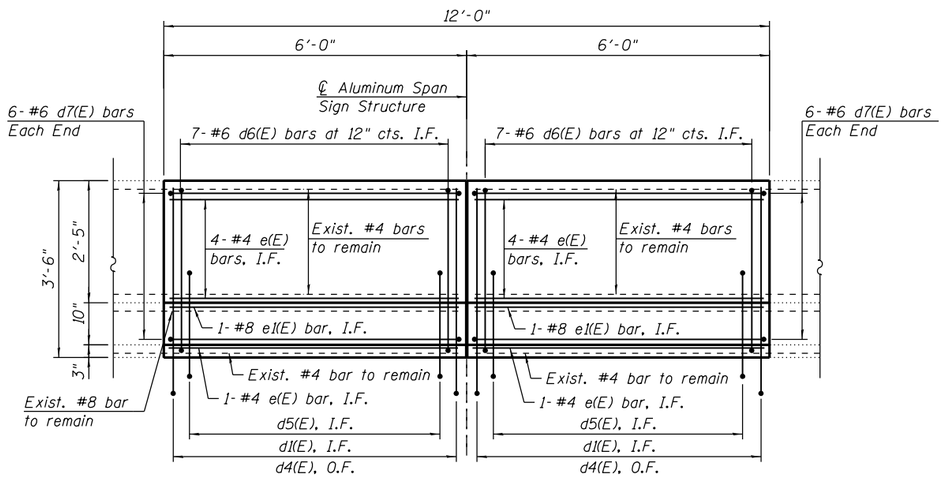

EAST PARAPET INSIDE ELEVATION

NOTE:

1. For Notes, see Sheet S12-06.

*Measured along ℄ of Overhead Sign Structure Support

LEGEND

O.F. Outside Face

I.F. Inside Face

E.F. Each Face

FILE NAME: pw:\\AECOM-NA-AWS1.aecomonline.local:AECOM_DS02_NA\Documents\01 Americas\Transportation\60269938 Circle\Phase_II\000_CAD\008_Structural\Sign Structures\62A76 Sign Structure\62A76-Span-SS326-ParapetDet.dgn

4:46:55 PM

HBM ENGINEERING GROUP, LLC	USER NAME = elizabath.kurian	DESIGNED - MAA, EBK	REVISED -	STATE OF ILLINOIS DEPARTMENT OF TRANSPORTATION	EAST AND WEST PARAPET - PARTIAL PLAN AND ELEVATION STRUCTURE NO. 016-1111
		CHECKED - MAI, JJS	REVISED -		
	PLOT SCALE = N.T.S	DRAWN - MAA,EBK	REVISED -		
	PLOT DATE = 1/29/2020	CHECKED - MAI, JJS	REVISED -		SHEET NO. S12-07 OF S12-12 SHEETS

F.A.I. RTE.	SECTION	COUNTY	TOTAL SHEETS	SHEET NO.
90/94/290	2015-019R	COOK	2155	1432
		CONTRACT NO. 62A76		
		ILLINOIS	FED. AID PROJECT	

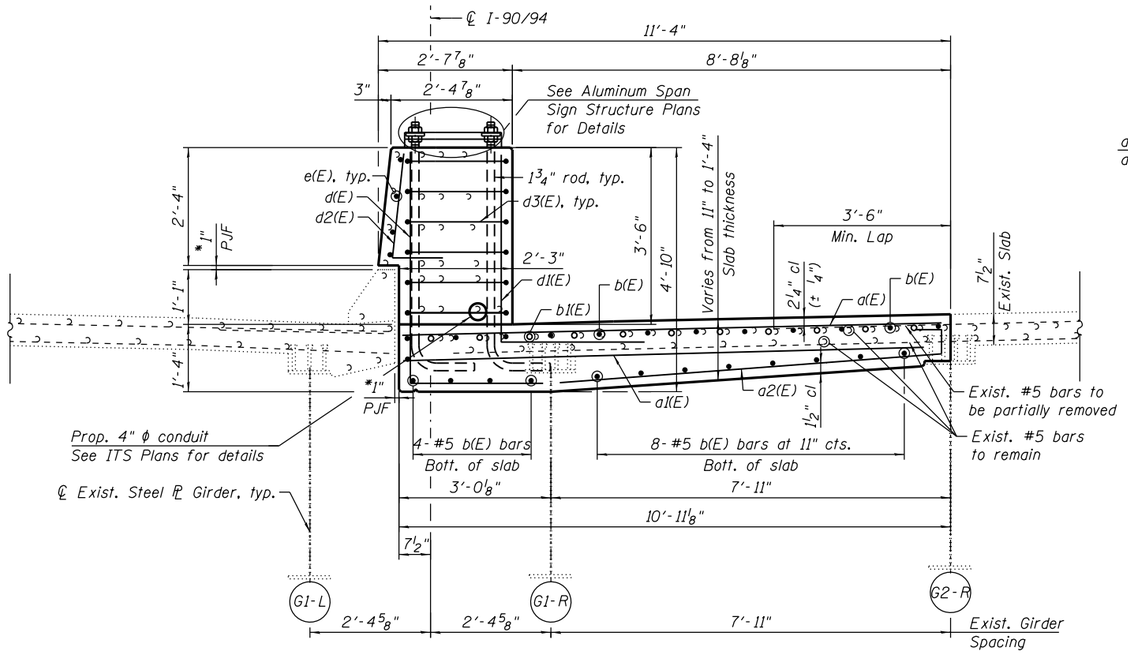

SECTION A-A

(Section at ℄ Pier 3)

* Cost includes with Concrete Superstructure

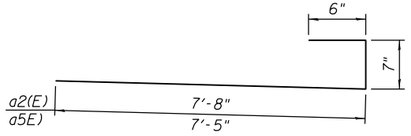

BARS a2(E) AND a5(E)

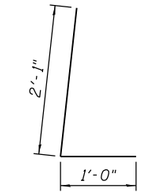

BAR d2(E)

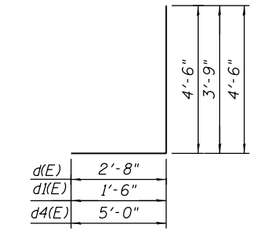

BARS d(E), d1(E) AND d4(E)

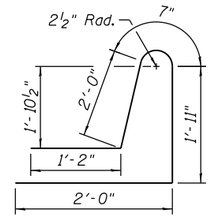

BAR d5(E)

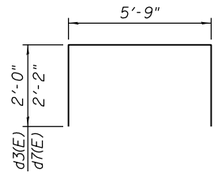

BARS d3(E) and d7(E)

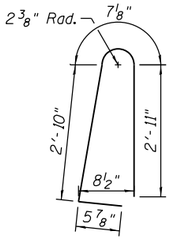

BAR d6(E)

BILL OF MATERIAL

BAR	NO.	Size	Length	Shape
a(E)	29	#6	10'-7"	
a1(E)	21	#5	10'-7"	
a2(E)	21	#5	8'-10"	
a3(E)	29	#6	12'-9"	
a4(E)	21	#5	12'-9"	
a5(E)	21	#5	8'-4"	
a6(E)	8	#5	2'-0"	
b(E)	52	#5	11'-8"	
b1(E)	26	#6	11'-8"	
d(E)	14	#6	7'-2"	
d1(E)	36	#6	5'-3"	
d2(E)	14	#5	3'-1"	
d3(E)	24	#6	9'-9"	
d4(E)	14	#5	8'-10"	
d5(E)	14	#6	7'-8"	
d6(E)	14	#6	6'-10"	
d7(E)	24	#6	10'-1"	
e(E)	18	#4	5'-9"	
e1(E)	2	#8	5'-9"	
CONCRETE SUPERSTRUCTURE		CU YD	21.8	
BRIDGE DECK GROOVING		SQ YD	23	
PROTECTIVE COAT		SQ YD	52	
REINFORCEMENT BARS, EPOXY COATED		POUND	4,810	

MIN. BAR LAPS

#5	3'-6"
#6	4'-10"

ANCHOR ROD DETAIL

Cost included in Concrete Superstructure. Anchor rods shall conform to ASTM F1554 Grade 105. Galvanize upper 12" minimum per AASHTO M232. No welding shall be permitted on rods.

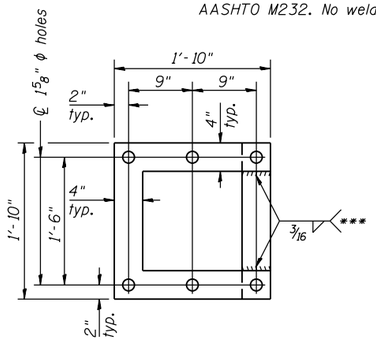

POSITIONING PLATE(S)

***Optionally may use four (4) separate bars. Weld to maintain perpendicularity.

NOTES:

1. For Notes, see Sheet S12-06

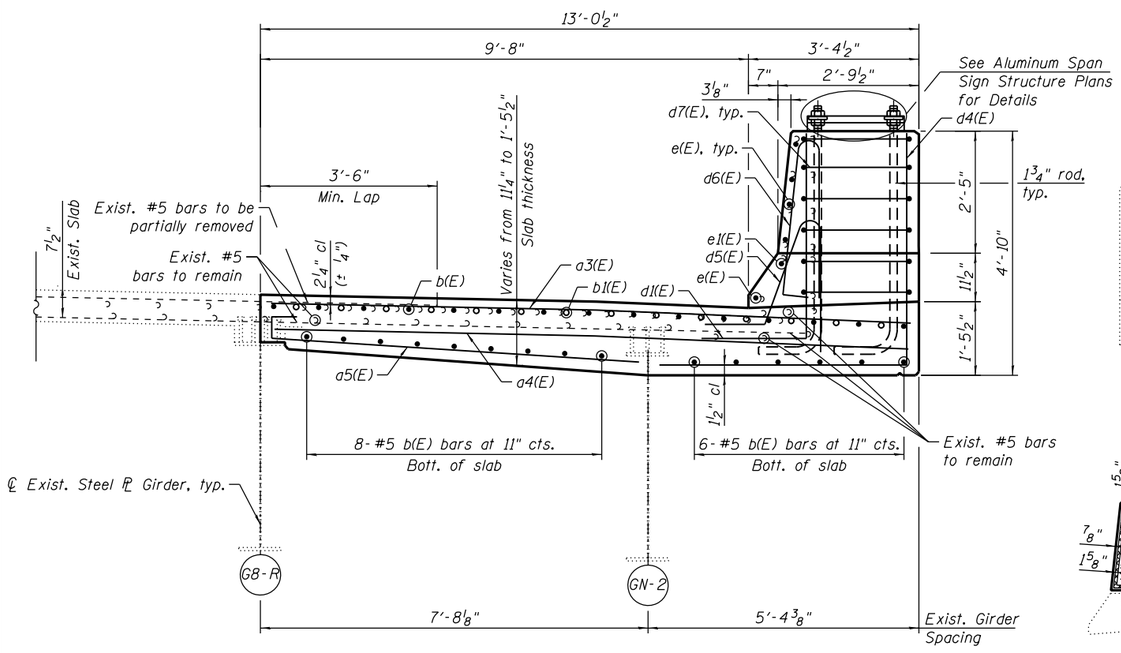

SECTION B-B

(Section at ℄ Pier 3)

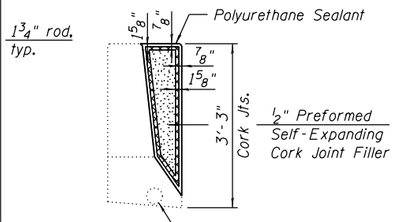

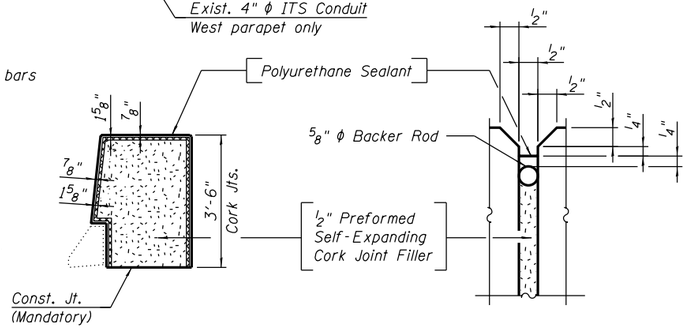

PARAPET JOINT DETAILS

USER NAME = elizabath.kurian	DESIGNED - MAA, EBK	REVISED -	STATE OF ILLINOIS DEPARTMENT OF TRANSPORTATION	DECK RECONSTRUCTION SECTIONS AND DETAILS STRUCTURE NO. 016-1111
	CHECKED - MAI, JJS	REVISED -		
PLOT SCALE = N.T.S	DRAWN - EBK	REVISED -		SHEET NO. S12-08 OF S12-12 SHEETS
PLOT DATE = 1/29/2020	CHECKED - MAI, JJS	REVISED -		

HBM ENGINEERING GROUP, LLC

F.A.I. RTE.	SECTION	COUNTY	TOTAL SHEETS	SHEET NO.
90/94/290	2015-019R	COOK	2155	1433
		CONTRACT NO. 62A76		
	ILLINOIS	FED. AID PROJECT		

FILE NAME: pw:\\AECOM-NA-AWS1.aecomonline.local:AECOM_D502_NA\Documents\01 Americas\Transportation\60269938 Circle\Phase_II\000_CAD\008_Structural\Sign Structures\62A76 Sign Structure\62A76-Span-55327-DeckDetails.dgn

4:48:32 PM

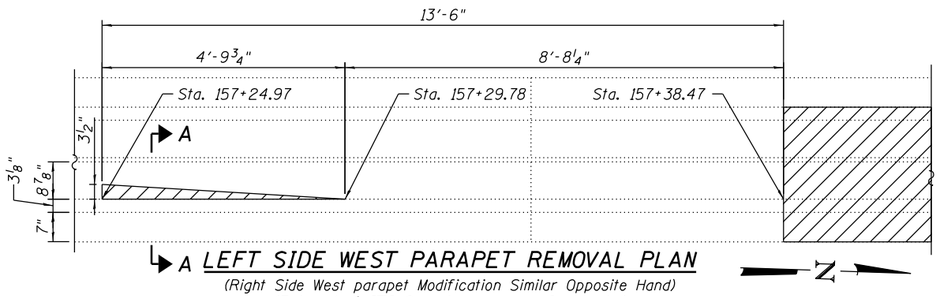

A LEFT SIDE WEST PARAPET REMOVAL PLAN

(Right Side West parapet Modification Similar Opposite Hand)
(Exist. 4" ϕ ITS Conduit not shown for clarity)

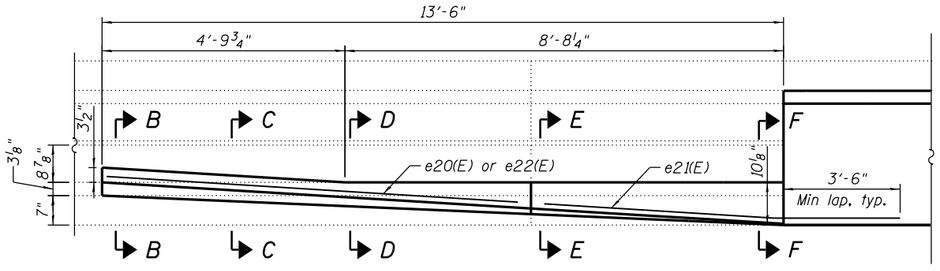

LEFT SIDE WEST PARAPET MODIFICATION PLAN

(Right Side West Parapet Modification Similar Opposite Hand)
(Exist. 4" ϕ ITS Conduit not shown for clarity)

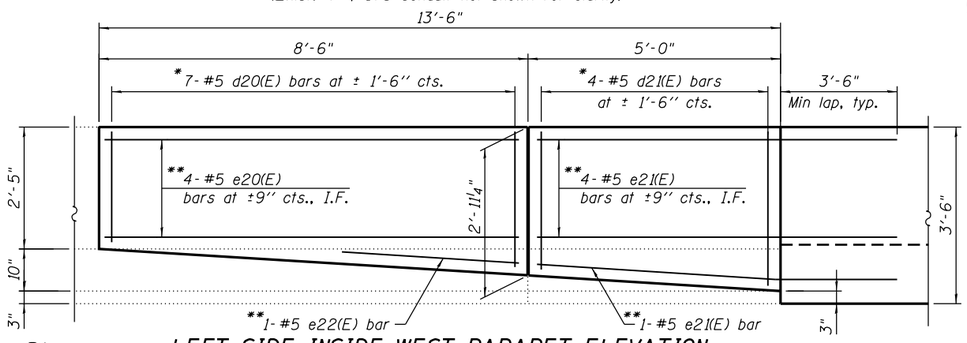

LEFT SIDE INSIDE WEST PARAPET ELEVATION

(Right Side West Parapet Modification Similar Opposite Hand)
(Exist. 4" ϕ ITS Conduit not shown for clarity)

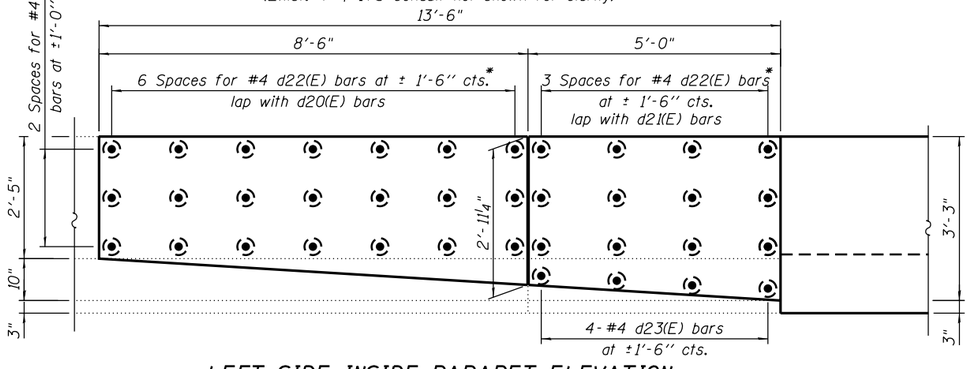

LEFT SIDE INSIDE PARAPET ELEVATION

(Right Side Parapet Modification Similar Opposite Hand)
(Showing Dowel Bars)
(Exist. 4" ϕ ITS Conduit not shown for clarity)

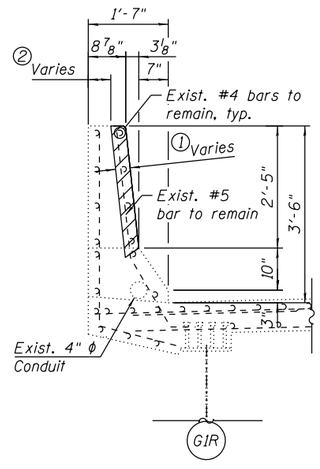

SECTION A-A

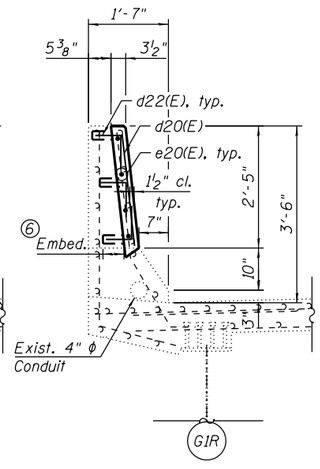

SECTION B-B
(Section at Sta. 157+24.97)

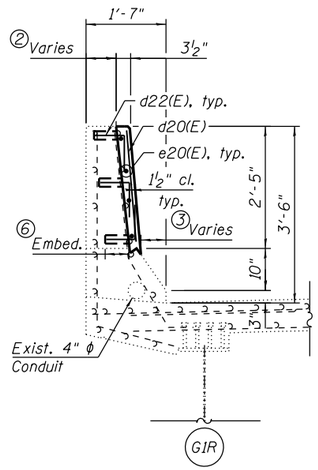

SECTION C-C

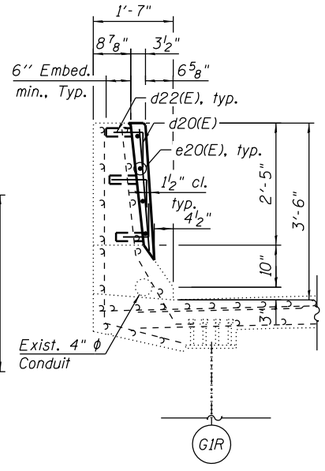

SECTION D-D
(Section at Sta. 157+29.78)

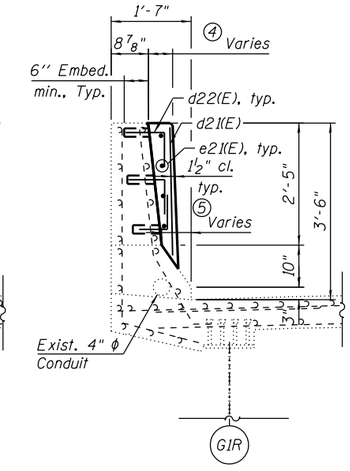

SECTION E-E

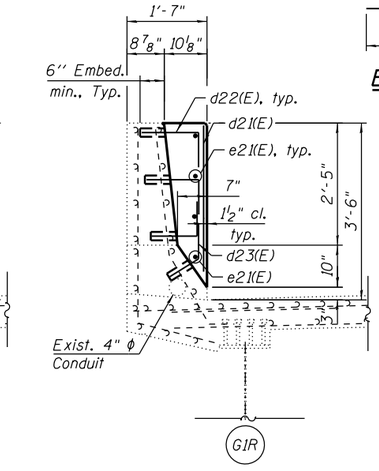

SECTION F-F

BILL OF MATERIAL

Bar	No.	Size	Length	Shape
d20(E)	14	#5	2'-7"	
d21(E)	8	#5	2'-11"	
d22(E)	66	#4	1'-9"	
d23(E)	8	#4	1'-4"	
**e20(E)	8	#5	8'-2"	
**e21(E)	10	#5	8'-4"	
**e22(E)	2	#5	3'-6"	
CONCRETE REMOVAL			CU YD	0.2
CONCRETE SUPERSTRUCTURE			CU YD	1.6
PROTECTIVE COAT			SQ YD	21
REINFORCEMENT BARS, EPOXY COATED			POUND	310

* Cut in field to fit
** Bend in field to fit

MIN. BAR LAPS

#4	2'-5"
#5	3'-6"

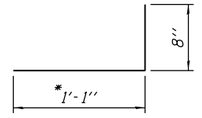

BAR d22(E)

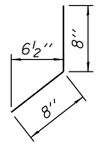

BAR d23(E)

1 3 1/2" at Sta. 157+24.97
0" at Sta. 157+29.78

2 5 3/8" at Sta. 157+24.97
8 7/8" at Sta. 157+29.78

3 7" at Sta. 157+24.97
4 1/2" at Sta. 157+29.78

4 3 1/2" at Sta. 157+24.97
10 1/8" at Sta. 157+38.47

5 4 5/8" at Sta. 157+24.97
0" at Sta. 157+38.47

6 Varies from 4" to 6" to maintain 1 1/2" min clearance

NOTES:

1. Existing reinforcement shall remain during concrete removal.
2. Existing reinforcement bars extending into the removal area shall be cleaned, straightened and incorporated into the new construction. Any reinforcement bars that are damaged during concrete removal shall be replaced with an approved bar splicer or anchorage system. Cost included with Concrete Removal.
3. Epoxy grout d22(E) and d23(E) bars according to Article 584 of the Standard Specifications. Drill to miss existing reinforcement.
4. Prior to drilling for proposed dowel bars, the Contractor shall locate the existing 4" ϕ ITS conduit within the parapet. All drilling shall be performed to miss the existing 4" ϕ ITS conduit to remain. Any damage to the existing conduit caused by the Contractor in the performance of his/her work shall be repaired by the Contractor, to the satisfaction of the Engineer, at no cost to the Department.

LEGEND:

	Concrete Removal
O.F.	Outside Face
I.F.	Inside Face

FILE NAME: pw:\\AECOM-NA-AWS1.aecomnt.ln.local:AECOM_DS02_NA\Documents\01 Americas\Transportation\60269938 Circle\Phase_II\000_CAD\008_Structural\Sign Structures\62A76 Sign Structure\62A76-Span-55328-ParapetMod
4:49:10 PM

HBM ENGINEERING GROUP, LLC

USER NAME = elizabath.kurian		DESIGNED - MAA, AMS		REVISED -	
		CHECKED - MAI, JJS		REVISED -	
PLOT SCALE = N.T.S		DRAWN - MAA, AMS		REVISED -	
PLOT DATE = 1/29/2020		CHECKED - MAI, JJS		REVISED -	

STATE OF ILLINOIS
DEPARTMENT OF TRANSPORTATION

EXISTING PARAPET MODIFICATION DETAILS
STRUCTURE NO. 016-1111
SHEET NO. S12-09 OF S12-12 SHEETS

F.A.I. RTE.	SECTION	COUNTY	TOTAL SHEETS	SHEET NO.
90/94/290	2015-019R	COOK	2155	1434
		CONTRACT NO. 62A76		
		ILLINOIS	FED. AID PROJECT	

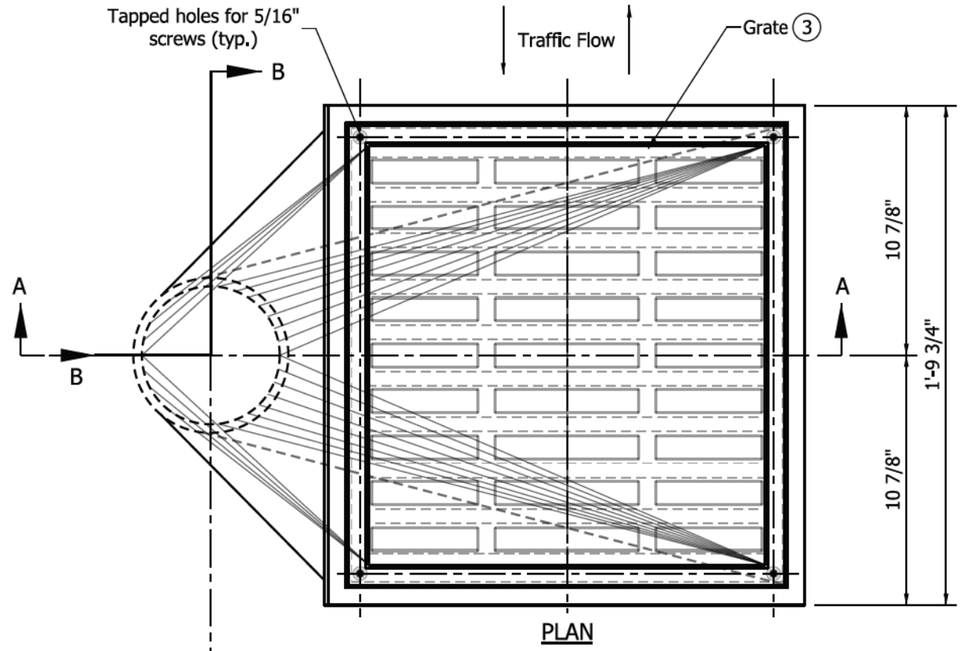

PLAN

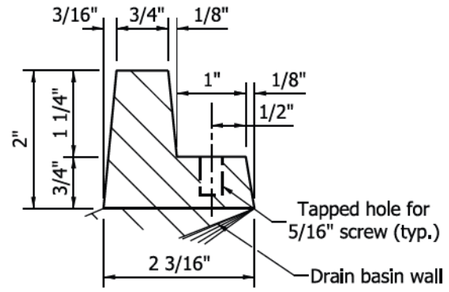

TYPICAL GRATE SHELF PROFILE A
(OUTLET SIDE OF BASIN)

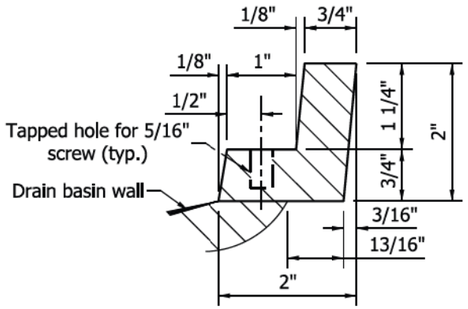

TYPICAL GRATE SHELF PROFILE B
(NON-OUTLET SIDE OF BASIN)

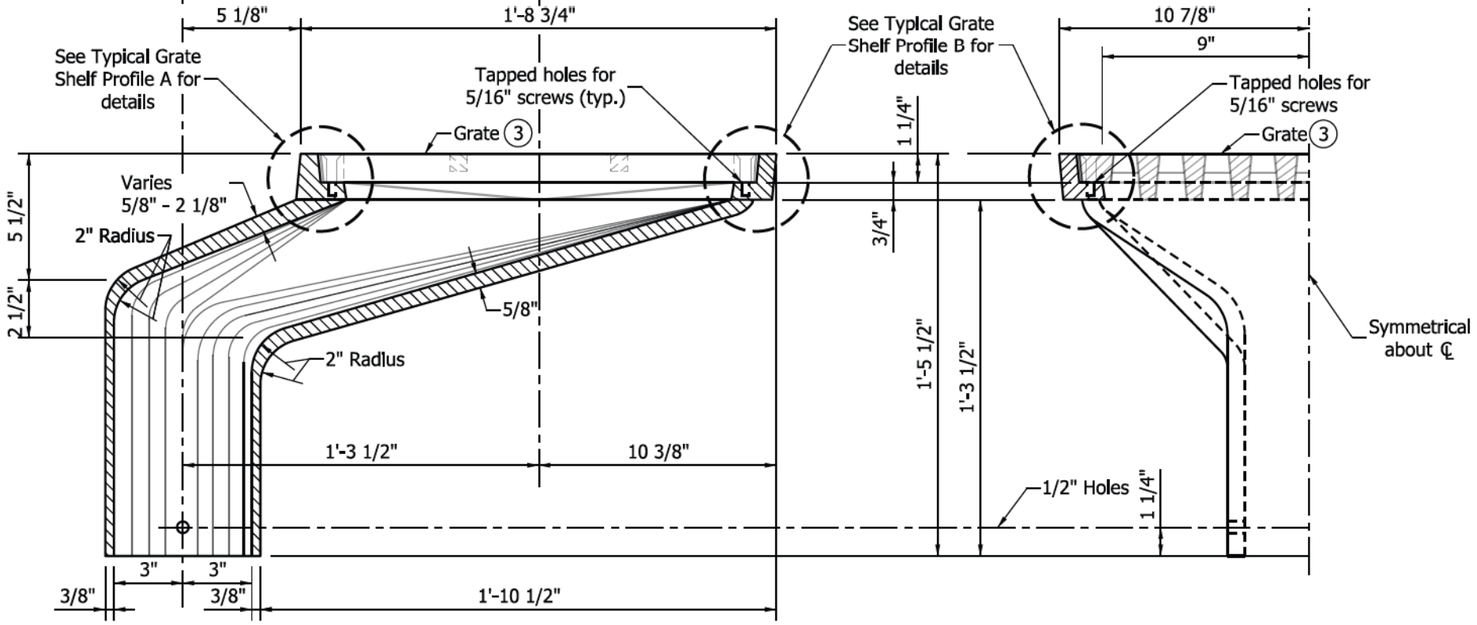

SECTION A-A

HALF SECTION B-B

NOTES:
1. SEE SHEET 1436 FOR GRATE DETAILS.

FILE PATH = pw:\\AECOM-NA-AWS1.aecomonline.local\aECOM_DS02_NA\Documents\01 Americas\Transportation\60269938 Circle\Phase_II\000_CAD\006_Roadway\Sheets\62A76 Contract\D162A76-Sht-Drain-Detail-02.dgn

TranSystems

D162A76-Sht-Drain-Detail-02.dgn	DESIGNED - JLV	REVISED -
USER NAME = mlroe	DRAWN - MRC	REVISED -
PLOT SCALE = 10.0000 ' / in.	CHECKED - JMG	REVISED -
PLOT DATE = 1/30/2020	DATE - 1/29/20	REVISED -

STATE OF ILLINOIS
DEPARTMENT OF TRANSPORTATION

DRAINAGE DETAIL
DRAINAGE SCUPPER (SPECIAL)

SCALE: | SHEET S12-10 OF S12-12 SHEETS | STA. | TO STA.

F.A.I. RTE.	SECTION	COUNTY	TOTAL SHEETS	SHEET NO.
90/94/290	2015-019R	COOK	2155	1435
		CONTRACT NO. 62A76		
	ILLINOIS	FED. AID PROJECT		

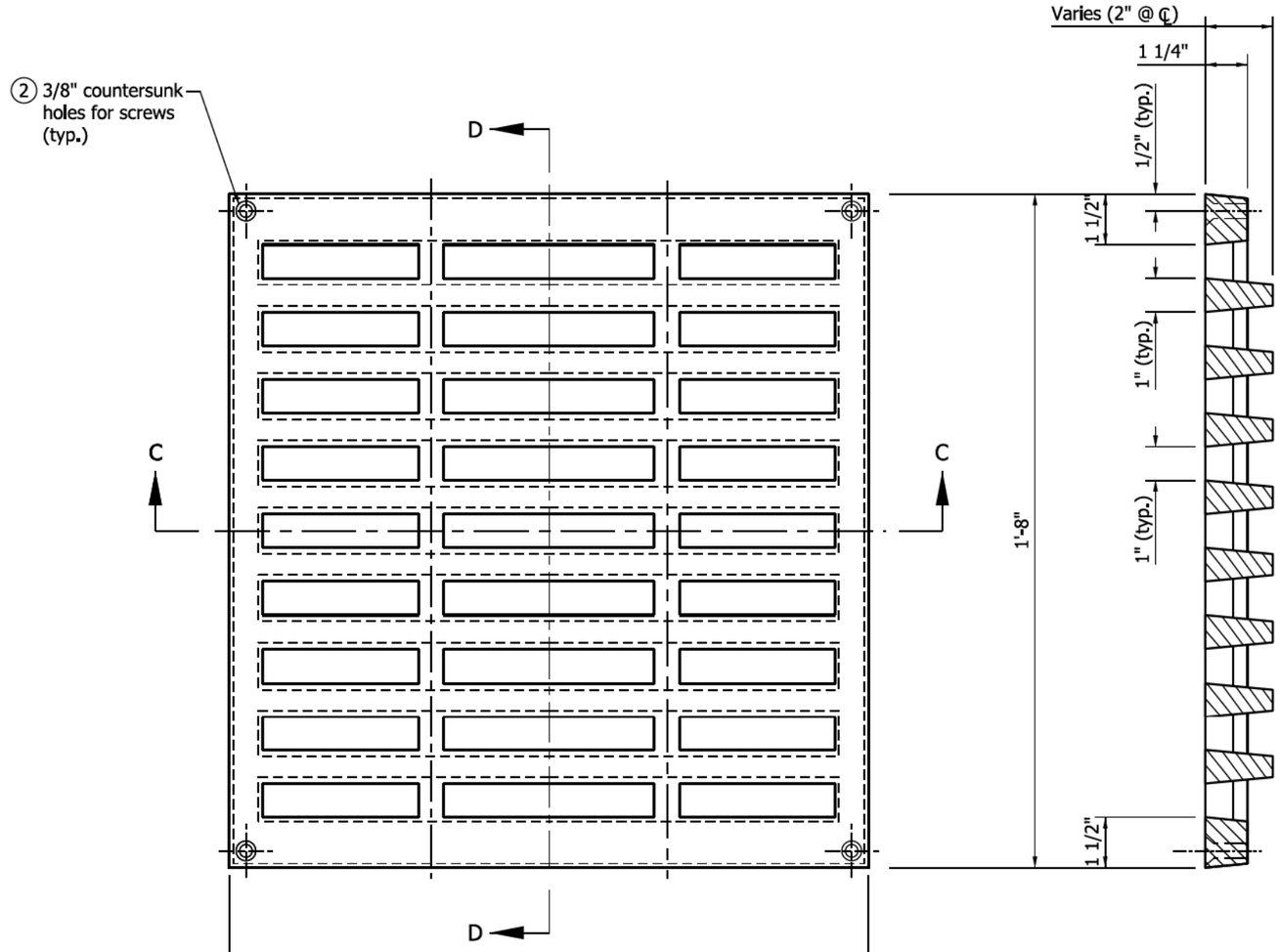

PLAN

SECTION D-D

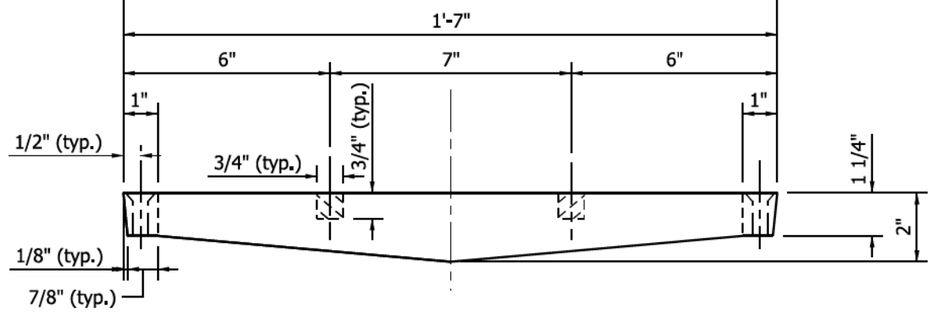

SECTION C-C

NOTES:
1. SEE SHEET 1435 FOR DECK DRAIN DETAILS.
2. 4-5/16" x 1 3/4" FLAT-HEAD STAINLESS STEEL SCREWS REQUIRED FOR EACH GRATE.

FILE PATH = pw:\AECOM-NA-AWS.aecomonline.local:AECOM_DS02_NA\Documents\01 Americas\Transportation\60269938 Circle\Phase II\000_CAD\006-Roadway\Sheets\62A76 Contract\D162A76-Sht-Drain-Detail-02.dgn

D162A76-Sht-Drain-Detail-02.dgn	DESIGNED - JLV	REVISED -	
USER NAME = mlroe	DRAWN - MRC	REVISED -	
PLOT SCALE = 10.0000 ' / in.	CHECKED - JMG	REVISED -	
PLOT DATE = 1/30/2020	DATE - 1/29/20	REVISED -	

STATE OF ILLINOIS
DEPARTMENT OF TRANSPORTATION

DRAINAGE DETAIL
DRAINAGE SCUPPER (SPECIAL)

SCALE: | SHEET S12-11 OF S12-12 SHEETS | STA. | TO STA.

F.A.I. RTE.	SECTION	COUNTY	TOTAL SHEETS	SHEET NO.
90/94/290	2015-019R	COOK	2155	1436
		CONTRACT NO. 62A76		
		ILLINOIS FED. AID PROJECT		

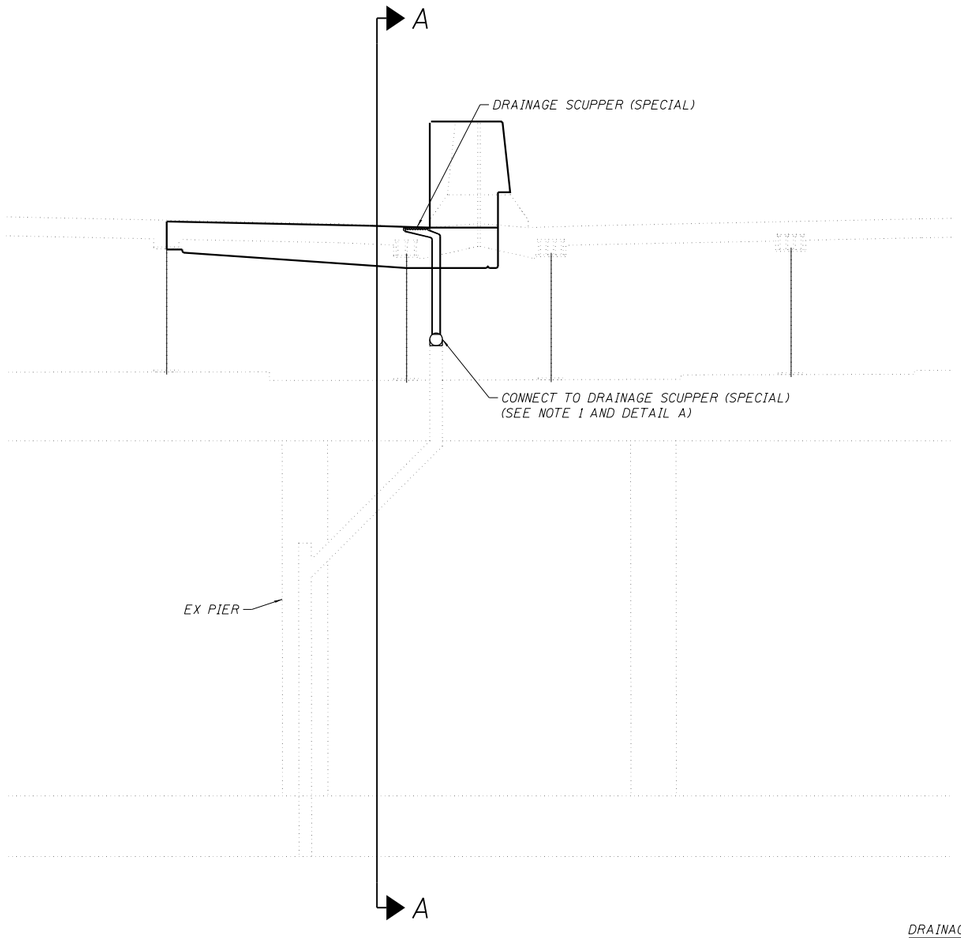

ELEVATION
N.T.S.
(LOOKING SOUTH)

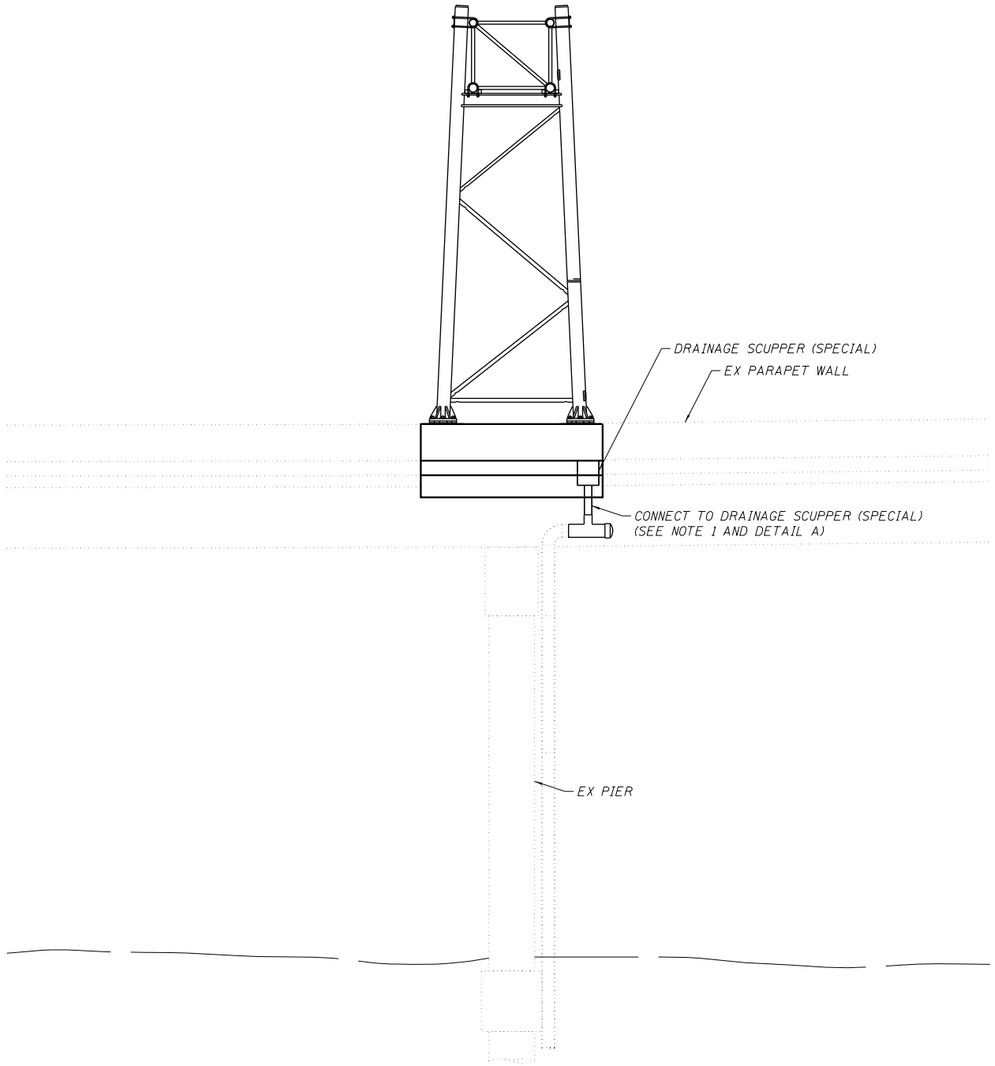

SECTION A-A
N.T.S.
(LOOKING WEST)

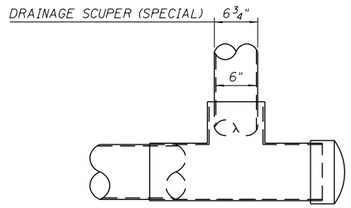

DETAIL A

NOTES:
1. ALL PIPING, FITTINGS, SUPPORT BRACKETS, INSERTS, AND BOLTS SHALL BE INCLUDED IN THE COST OF DRAINAGE SYSTEM MODIFICATIONS.

FILE PATH = pw:\AECOM-NA-AWS1.aecomonline.local:AECOM_DS02_NA\Documents\01 Americas\Transportation\60269938 Circle\Phase II\002.CAD\006.Roadway\Sheets\62A76 Contract\D162A76-Sht-Drain-Detail-02.dgn

TranSystems

D162A76-Sht-Drain-Detail-02.dgn	DESIGNED - JLV	REVISED -
USER NAME = mrciss	DRAWN - MRC	REVISED -
PLOT SCALE = 10.0000 ' / in.	CHECKED - JMG	REVISED -
PLOT DATE = 1/29/2020	DATE - 1/29/20	REVISED -

STATE OF ILLINOIS
DEPARTMENT OF TRANSPORTATION

DRAINAGE DETAIL
DRAINAGE SCUPPER (SPECIAL)

SCALE: | SHEET S12-12 OF S12-12 SHEETS | STA. | TO STA.

F.A.I. RTE.	SECTION	COUNTY	TOTAL SHEETS	SHEET NO.
90/94/290	2015-019R	COOK	2155	1437
		CONTRACT NO. 62A76		
	ILLINOIS	FED. AID PROJECT		

FOR INFORMATION ONLY

INDEX OF VOLUMES

VOL. NO	DESCRIPTION	NO. OF SHEETS
	CIVIL	
1.	ROADWAY PLANS & GENERAL SHEETS	127
2.	MAINTENANCE OF TRAFFIC & ROADWAY CROSS SECTIONS	45
	STRUCTURAL	
3.	STRUCTURE NO. 016-0137 (MAXWELL ST. TO 15TH ST.)	65
4.	STRUCTURE NO. 016-1110 (15TH ST. TO 16TH ST.)	33
5.	STRUCTURE NO. 016-1111 (16TH ST. TO 18TH ST.)	51
6.	STRUCTURE NO. 016-1112 (18TH ST. TO CERMAK RD.)	91
7.	STRUCTURE NO. 016-1113 (CERMAK RD. TO CHICAGO RIVER)	88
8.	STRUCTURE NO. 016-1114 & 1070 (CHICAGO RIVER BRIDGE)	16
9.	STRUCTURE NO. 016-1115 (I-55 INTERCHANGE - MAINLINE)	101
10.	STRUCTURE NO. 016-1047 & 1140 (I-55 INTERCHANGE-RAMPS)	53
11.	STRUCTURE NO. 016-1115 (CANAL ST. TO STEWART AVE.)	21
12.	STRUCTURE NO. 016-1117 & 1118 (STEWART AVE. TO 28TH PL.)	98
13.	MISCELLANEOUS VIADUCT DETAILS AND SOUTH TERMINUS RETAINING WALLS	88
	ELECTRICAL	
14	ROADWAY LIGHTING & SURVEILLANCE	49
	TOTAL	926

DESIGN DESIGNATION

100' 200' 300' 1" = 100'
0 10' 20' 30' 1" = 10'
0 50' 100' 1" = 50'
0 50' 100' 1" = 40'
0 50' 100' 1" = 30'
0 100' 1" = 20'

FULL SIZE PLANS HAVE BEEN PREPARED USING STANDARD ENGINEERING SCALES, REDUCED SIZED PLANS WILL NOT CONFORM TO STANDARD SCALES, IN MAKING MEASUREMENTS ON REDUCED PLANS, THE ABOVE SCALES MAY BE USED.

CONTRACT NO. 80065

CONSULTANT SECTION ENGINEER: R. NEWSTREET / J. ROS 312 705-4269

STATE OF ILLINOIS
DEPARTMENT OF TRANSPORTATION
DIVISION OF HIGHWAYS

PLANS FOR PROPOSED FEDERAL AID INTERSTATE HIGHWAY

SCALES		
PLAN	1 INCH = * FEET	
PROFILE HORIZ.	1 INCH = * FEET	
PROFILE VERT.	1 INCH = * FEET	* SEE PLANS
CROSS SECTIONS	1 INCH = * FEET HORIZONTAL	
	1 INCH = * FEET VERTICAL	

VOLUME NO. 5

F.A.I. ROUTE 90/94 (DAN RYAN EXPRESSWAY)

SECTION 1985-077 R

~~PROJECT~~

COOK COUNTY

~~C-91-430-85~~

NORTHBOUND MAINLINE RECONSTRUCTION
28TH PL. TO MAXWELL ST.

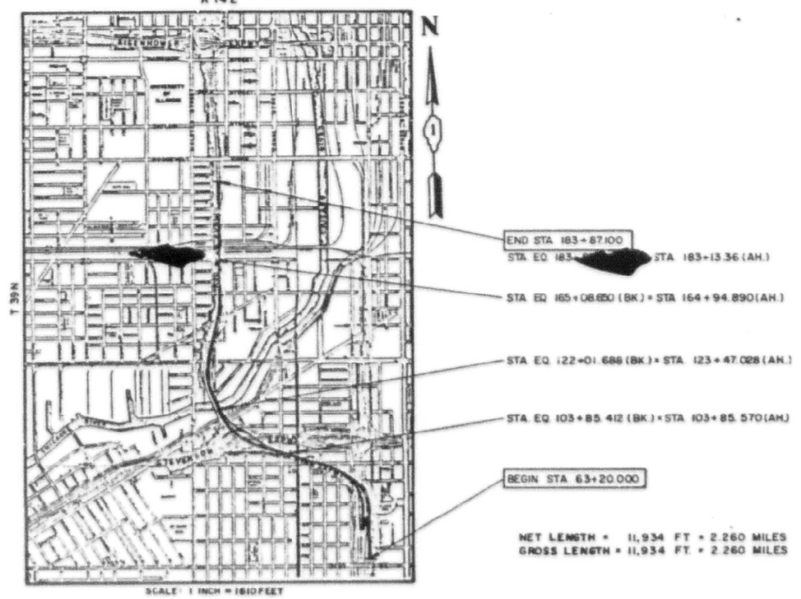

END STA. 183+87.100
STA. EQ. 183+ = STA. 183+13.36 (AH.)
STA. EQ. 165+08.650 (BK.) = STA. 164+94.890 (AH.)
STA. EQ. 122+01.686 (BK.) = STA. 123+47.028 (AH.)
STA. EQ. 103+85.412 (BK.) = STA. 103+85.570 (AH.)
BEGIN STA. 63+20.000

NET LENGTH = 11,934 FT. = 2.260 MILES
GROSS LENGTH = 11,934 FT. = 2.260 MILES

△ 12-1-1988

F.A. RTE.	SECTION	COUNTY	TOTAL SHEETS	SHEET NO.
90/94	*	COOK	51	1
F.A.U.R. RTE.	BEARING	PROJECT		

*1985-077 BR
P-91-170-84



LOCATION OF SECTION INDICATED THUS: —

STATE OF ILLINOIS
DEPARTMENT OF TRANSPORTATION
DIVISION OF HIGHWAYS

SUBMITTED _____ 19__
EXAMINED _____ 19__ DISTRICT ENGINEER
PASSED _____ 19__ ENGINEER OF PLANS AND CONTRACTS
APPROVED _____ 19__ ENGINEER OF DESIGN
DIRECTOR, DIVISION OF HIGHWAYS

DEPARTMENT OF TRANSPORTATION
FEDERAL HIGHWAY ADMINISTRATION
DIVISION ENGINEER _____ DATE _____

COUNTY COOK SECTION 1985-077 BR ROUTE I-90/94 (DAN RYAN EXPRESSWAY)

HBM ENGINEERING GROUP, LLC	USER NAME = francisco.lopez	DESIGNED - JMI	REVISED -	STATE OF ILLINOIS DEPARTMENT OF TRANSPORTATION	EXISTING RECORD DRAWINGS STRUCTURE NO. 016-1111
		CHECKED - MAI, JJS	REVISED -		
	PLOT SCALE = N.T.S	DRAWN - JMI	REVISED -		
	PLOT DATE = 1/24/2020	CHECKED - MAI, JJS	REVISED -		SHEET NO.AS12-01 OF AS12-49SHEETS

F.A.I. RTE.	SECTION	COUNTY	TOTAL SHEETS	SHEET NO.
90/94/290	2015-019R	COOK	2155	1438
		CONTRACT NO. 62A76		
		ILLINOIS	FED. AID PROJECT	

FILE NAME: pw:\AECOM-NA-AWS1.aecomonline.local\AECOM_DS02_NA\Documents\01 Americas\Transportation\60269938 Circle\Phase_II\000_CAD\008_Structural\Sign Structures\62A76 Sign Structure\62A76-Span-55329-Exist Plans
12:38:14 PM

FOR INFORMATION ONLY

PLAN DIMENSIONS AND DETAILS RELATIVE TO EXISTING STRUCTURE WERE OBTAINED FROM EXISTING PLANS AND ARE SUBJECT TO NORMAL CONSTRUCTION VARIATIONS. IT SHALL BE THE CONTRACTOR'S RESPONSIBILITY TO VERIFY SUCH DIMENSIONS AND DETAILS IN THE FIELD AND MAKE NECESSARY APPROVED ADJUSTMENTS PRIOR TO CONSTRUCTION OR ORDERING OF MATERIALS. SUCH VARIATION SHALL NOT BE CAUSE FOR ADDITIONAL COMPENSATION OR A CHANGE IN THE SCOPE OF WORK, HOWEVER, THE CONTRACTOR WILL BE PAID FOR THE QUANTITY ACTUALLY FURNISHED AT THE UNIT PRICE BID FOR THE WORK.

CALCULATED WEIGHT OF STRUCTURAL STEEL = M-183 = 337,260 LBS. (TO BE ERECTED)

CALCULATED WEIGHT OF STRUCTURAL STEEL REMOVAL = 90,648 LBS. (TO BE REMOVED)

THE MAIN LOAD CARRYING MEMBER COMPONENTS SUBJECT TO TENSILE STRESSES SHALL CONFORM TO THE SUPPLEMENTAL REQUIREMENTS FOR NOTCH TOUGHNESS ZONE 2. THESE COMPONENTS INCLUDE TENSION FLANGES AND WEBS OF PLATE GIRDERS, WIDE FLANGE BEAMS AND ALL SPLICE PLATES MATERIAL OF THE WELDED PLATE GIRDERS AND ARE DESIGNATED ON THE PLANS BY "N.T.R.".

REINFORCEMENT BARS SHALL CONFORM TO THE REQUIREMENTS OF AASHTO M-31, M-42 OR M-53 GRADE 60.

REINFORCEMENT BARS NOTED (E) SHALL BE EPOXY COATED.

FIELD WELDING OF CONSTRUCTION ACCESSORIES WILL NOT BE PERMITTED TO THE BOTTOM FLANGE OF PLATE OR GIRDERS NOR TO THE TOP FLANGE FOR A DISTANCE EQUAL TO ONE-FOURTH THE SPAN LENGTH EACH WAY FROM THE PIER SUPPORTS. FIELD WELDING IN OTHER AREAS WILL BE PERMITTED ONLY WHEN APPROVED BY THE ENGINEER.

ANCHOR BOLTS SHALL BE SET BEFORE DIAPHRAGMS OR CROSS FRAMES OVER SUPPORTS.

FASTENERS SHALL CONFORM TO THE REQUIREMENT OF AASHTO M164 TYPE I (ASTM A325). ALL FASTENERS SHALL BE 7/8" DIAMETER UNLESS OTHERWISE NOTED WITH 15/16" DIAMETER BOLT HOLES. BOLT HOLES SHALL BE DRILLED 1-1/16" DIAMETER FOR 7/8" DIAMETER BOLTS AT CROSS FRAME CONNECTIONS. DIAPHRAGMS SHALL BE CONNECTED WITH 3/4" DIAMETER BOLTS AND BOLT HOLES SHALL BE PREDRILLED TO 15/16" DIAMETER. HARDENED WASHERS SHALL BE USED FOR ALL CROSS FRAME AND DIAPHRAGM CONNECTION.

EXPANSION BOLTS SHALL CONSIST OF APPROVED EXPANSION ANCHORS, PROVIDING MINIMUM CERTIFIED PROOF LOAD = 4,080 LBS. FOR 3/4" DIAMETER X 16" HOOKED BOLTS AND 2000LBS FOR 1"Ø X 10" HOOKED BOLTS

ROADWAY EXPANSION GUARDS SHALL BE ASSEMBLED IN THE PROPER POSITION WITH THE ENDS IN PLACE AND SHALL BE LEFT ASSEMBLED FOR SHOP INSPECTION.

THE ROADWAY EXPANSION PLATES SHALL BE FLAME CUT AS PROVIDED IN ARTICLE 507.04(1) OF THE STANDARD SPECIFICATIONS.

BEARING SEAT SURFACES SHALL BE CONSTRUCTED OR ADJUSTED TO THE DESIGNATED ELEVATIONS WITHIN A TOLERANCE OF 1/8 INCH. ADJUSTMENT SHALL BE MADE EITHER BY GRINDING THE SURFACE OR BY SHIMMING THE BEARINGS. TWO 1/8" ADJUSTING SHIMS, OF THE DIMENSIONS OF THE BOTTOM LEAPING PLATE, SHALL BE PROVIDED FOR EACH BEARING IN ADDITION TO ALL OTHER PLATES OR SHIMS. (FOR TYPE I ELASTOMERIC BEARINGS, SHIMS OF THE DIMENSIONS OF TOP PLATE BE PROVIDED AND PLACED AS DETAILED).

STUD SHEAR CONNECTORS

STUD SHEAR CONNECTORS SHALL CONFORM TO THE REQUIREMENTS OF AASHTO M169 COLD DRAWN BARS, GRADES 1015, 1018 OR 1020 EITHER SEMI-OR FULLY-KILLED, GRANULAR OR SOLID FLUX FILLED HEADED STUDS AUTOMATICALLY END WELDED. STUD SHEAR CONNECTORS SHALL BE INSTALLED IN ACCORDANCE WITH ARTICLE 507.08(a). MATERIAL SHALL CONFORM TO ARTICLE 7.0.38 OF STD. SPECS.

NOTES FOR NEW CONCRETE PIERS

A) THE CONTRACTOR SHALL SPACE REINFORCEMENT BARS IN PIER CAP TO MISS ANCHOR BOLTS.

B) ALL EXPOSED EDGES SHALL HAVE STANDARD 3/4 INCH CHAMFERS, EXCEPT NOTED OTHERWISE.

FIELD CLEANING AND PAINTING

1) EXISTING STRUCTURAL STEEL SURFACES IN CONTACT WITH NEW STRUCTURAL STEEL SHALL BE FIELD CLEANED IN ACCORDANCE WITH ARTICLE 509.06(b) METHOD II. SURFACES BLAST CLEANED TO RECEIVE NEW STRUCTURAL STEEL SHALL BE PAINTED WITH ONE COAT LEAD AND CHROMATE FREE ALKYD PAINT PRIMER. CONTACT SURFACES SHALL NOT BE PAINTED.

2) EXISTING TOP FLANGE SURFACES IN CONTACT WITH NEW CONCRETE SHALL BE CLEANED IN ACCORDANCE WITH ARTICLE 509.06(b), METHOD III.

3) SURFACES TO RECEIVE STUD SHEAR CONNECTORS SHALL BE CLEANED IN ACCORDANCE WITH ARTICLE 509.06(b), METHOD II AND ARTICLE 507.08(a)(2).

4) NEW STRUCTURAL STEEL SHALL BE SPOT PAINTED WITH ZINC SILICATE PRIMER APPLIED ON HEADS OF FIELD BOLTS, FIELD WELDS, AND ALL AREAS WHERE PAINT HAS BEEN REMOVED OR DAMAGED.

STATION 155+66.55
REBUILT 198 BY
STATE OF ILLINOIS
F.A. PROJ. ACIR-94 5(170)
LOADING HS20
STR. NO. 016-1111

NAME PLATE
(See Std. 2113)

LOAD FOR TEMPORARY SUPPORT		
BEARING LINE	D.L. REACTION	L.L. REACTION
4	120**	
5	120**	
6	119**	
7S	34**	
7N	5*	
8	18*	
9	19*	
10	19*	
11	18*	
EB S	20*	
EB N	20*	

Note
D.L. Reaction includes the weight of steel beams only
* Includes weight of concrete deck.

SHEET No.	INDEX	
1	C1	TITLE SHEET
2	C2	GENERAL NOTES, INDEX & BILL OF MATERIAL
3	C3	GENERAL PLAN
4	C4	CAISSON LOCATION PLAN
5	C5	CAISSON DETAILS
6	C6	PIER REMOVAL
7-10	C7-C10	PIER REPLACEMENT DETAILS
11	C11	ABUTMENT DETAILS
12-15	C12-C15	RETAINING WALL DETAILS
16-17	C16-C17	SUBSTRUCTURE BAR SCHEDULE
18-19	C18-C19	FRAMING PLANS
20	C20	STRESS TABLE
21-25	C21-C25	STRUCTURAL STEEL DETAILS
26-27	C26-C27	FATIGUE RETROFIT REPAIR DETAILS
28	C28	TRANSVERSE DECK JOINT ELEVATIONS
29-33	C29-C33	TOP OF SLAB ELEVATIONS
34-43	C34-C43	DECK PLAN, CROSS SECTION & PARAPET DETAILS
44	C44	DECK BAR SCHEDULE
45-51	C45-C51	SUBSTRUCTURE WIDENING, REHABILITION & REPLACEMENT

FEDERAL AID ROUTE NO.	SECTION	COUNTY	TOTAL SHEETS	SHEET NO.
90/94	*	COOK	51	2
STA.		TO STA.		
FED. RD. DIST. NO.	ILLINOIS	FED. AID PROJECT		

*1985-077BR

TOTAL BILL OF MATERIAL

ITEM	UNIT	TOTAL
*DRILL AND GROUT DOWELS	EACH	154
*STRUCTURE EXCAVATION	CU.YD.	232.8
*ROCK EXCAVATION FOR STRUCTURES	CU.YD.	5.8
*CONCRETE REMOVAL	CU.YD.	2050
*CONCRETE REMOVAL (SPECIAL)	CU.YD.	4.5
*REMOVAL OF EXISTING CONCRETE DECK	L.SUM	.079
*EXPANSION BOLTS 3/4 INCH DIA.	EACH	24
*EXPANSION BOLTS 1/2 INCH DIA.	EACH	72
*PROTECTIVE SHIELD	SQ.YD.	815
*CAISSON SHAFT 30"DIAMETER	CU.FT.	1988
*CAISSON SHAFT 36"DIAMETER	CU.FT.	3468
*CAISSON SHAFT 42"DIAMETER	CU.FT.	118
*CAISSON SHAFT 48"DIAMETER	CU.FT.	1478
*CLASS "X" CONCRETE	CU.YD.	173.4
*CLASS "X" CONCRETE SUPERSTRUCTURE	CU.YD.	2346.8
PREFORMED JOINT SEAL 2 1/2 INCH	LIN.FT.	77.2
*NEOPRENE EXPANSION JOINT 2 INCH	LIN.FT.	25.2
*NEOPRENE EXPANSION JOINT 2 1/2 INCH	LIN.FT.	25.2
** PROTECTIVE COAT	SQ.YD.	1812.3
EPOXY CRACK SEALING	LIN.FT.	31
*FORMED CONCRETE REPAIR(4.5"depth)	SQ.FT.	722
*FORMED CONCRETE REPAIR(>5" depth)	SQ.FT.	1082
*PROTECTIVE SURFACE TREATMENT	SQ.FT.	29,388
*MECHANICAL SPLICERS	EACH	34
*TEMPORARY THRUSTS AND CROSSOVERS	LIN.FT.	285
*REINFORCEMENT BARS (EPOXY COATED)	POUND	814490
*ERECTING STRUCTURAL STEEL	L.SUM	0.045
STUD SHEAR CONNECTORS	EACH	24,268
*STRUCTURAL STEEL REPAIR	POUND	5400
*STRUCTURAL STEEL REMOVAL	L.SUM	0.07
*RELOCATING EXISTING STEEL STRINGERS	POUND	77,958
*STRUCT. FIELD INSPECTIONS-TYPE I CONNECTION	EACH	21
*FIELD DRILL 1"DIA. HOLES IN EXIST. GIRD. WEB	EACH	20
*REINFORCED NEOPRENE EXPANSION JT. TREATMENT	LIN.FT.	133.4
*INSTALLING BRIDGE SCUPPERS	EACH	28
*INSTALLING BRIDGE SCUPPERS-SPECIAL	EACH	3
*INSTALLING SB BRIDGE SCUPPERS-SPECIAL	EACH	4
*DOWNSPOUT DRAINAGE SYSTEM	LIN.FT.	1882
*NAME PLATES	EACH	1
*TEMPORARY SUPPORT SYSTEM (HEIGHT ≤ 38 FT.)	EACH	3
*TEMPORARY SUPPORT SYSTEM (HEIGHT > 38 FT.)	EACH	4
*REMOVAL OF EXISTING FOUNDATIONS	CU.YD.	90
*CLASS "X" CONCRETE RETAINING WALL	CU.YD.	183.5
*GEOCOMPOSITE WALL DRAIN	SQ.YD.	320.0

* SPECIAL PROVISIONS
** Quantity Does Not Include Bridge Surface.

NOTE: FINGER JOINTS INCLUDED IN "ERECTING STRUCTURAL STEEL".

12-1-88

SHEET C2 OF C51

REVISIONS	
Name	Date

STATE OF ILLINOIS
DEPARTMENT OF TRANSPORTATION
F.A.I. ROUTE 90/94 (DAN RYAN EXPRESSWAY)
SECTION 1985-077BR COOK COUNTY
N.B. MAINLINE RECONSTRUCTION
STRUCTURE 016-1111
GENERAL NOTES, INDEX & BILL OF MATERIAL

Scale : NONE
Date : AUGUST 1988
Drawn By: AV
Checked By: M.E.M.

ENVIRODYNE ENGINEERS INC.
Chicago, Illinois

HBM ENGINEERING GROUP, LLC

USER NAME = francisco.lopez		DESIGNED - JMI		REVISED -	
		CHECKED - MAI, JJS		REVISED -	
PLOT SCALE = N.T.S		DRAWN - JMI		REVISED -	
PLOT DATE = 1/24/2020		CHECKED - MAI, JJS		REVISED -	

STATE OF ILLINOIS
DEPARTMENT OF TRANSPORTATION

EXISTING RECORD DRAWINGS
STRCUTURE NO. 016-1111
SHEET NO.AS12-02 OF AS12-49SHEETS

F.A.I. RTE.	SECTION	COUNTY	TOTAL SHEETS	SHEET NO.
90/94/290	2015-019R	COOK	2155	1439
		CONTRACT NO. 62A76		
	ILLINOIS	FED. AID PROJECT		

FILE NAME: pw:\AECOM-NA-AWS1.aecomonline.local\AECOM_DS02_NA\Documents\01 Americas\Transportation\60269938 Circle\Phase_II\000_CAD\008_Structural\Sign Structures\62A76 Sign Structure\62A76-Span-55329-Exist Plans
12:38:19 PM

FOR INFORMATION ONLY

BENCH MARK:
TBM #49 North NE flange bolt on hydrant on NW corner of 21st St. and Emerald St. Elev. 13.59

EXISTING STRUCTURE
Structure No. 016-1111 is a part of the Dan Ryan Expressway Viaduct. The superstructure is concrete deck supported on steel plate girders. The Mainline structure is three unit, first unit having simple span and units two and three having five continuous spans. The Entrance RampE Structure consists of two units of three and four continuous spans, whereas Exit Ramp D structure has one unit of five continuous spans. The substructure consists of multiple column concrete piers and the ramp abutments supported on concrete caissons. The structure was built in 1961 and opened to traffic in 1962.

Design Stresses
New Construction
f'c = 3500 PSI
fc = 1400 PSI
fy = 60,000 PSI (Reinforcement)
fs = 20,000 PSI
Working Stress Design Method
Allowable Bearing Pressure on Rock = 60 Tons/Sq. Ft.

Loading HS20-44 + Alt.
Design Specifications: AASHTO (1983) And Applicable Interims (1984, 1985 Thru 1987)

Existing Construction
f'c = 3500
fc = 1400 W/o Earth Pressure
fc = 1,000 PSI W/Earth Pressure
V = 75 PSI Max. Shear In Footings
fs = 18,000 PSI
Bedrock Bearing For Drilled Sub-Piers = 60 Tons/Sq. Ft.

FEDERAL AID ROUTE NO.	SECTION	COUNTY	TOTAL SHEETS	SHEET NO.
90/94	*	COOK	51	3
STA.		TO STA.		
FED. RD. DIST. NO.	ILLINOIS	FED. AID PROJECT		

* 1985-077 BR

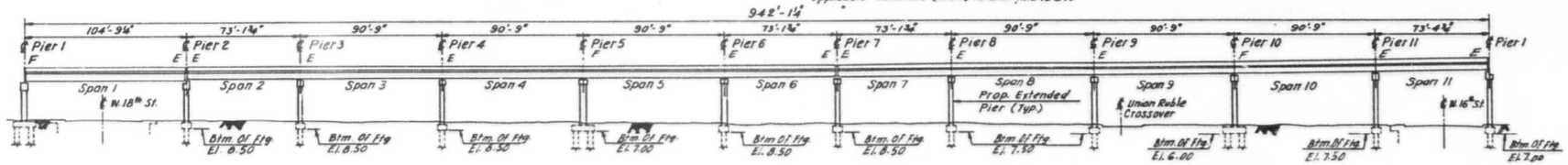

ELEVATION

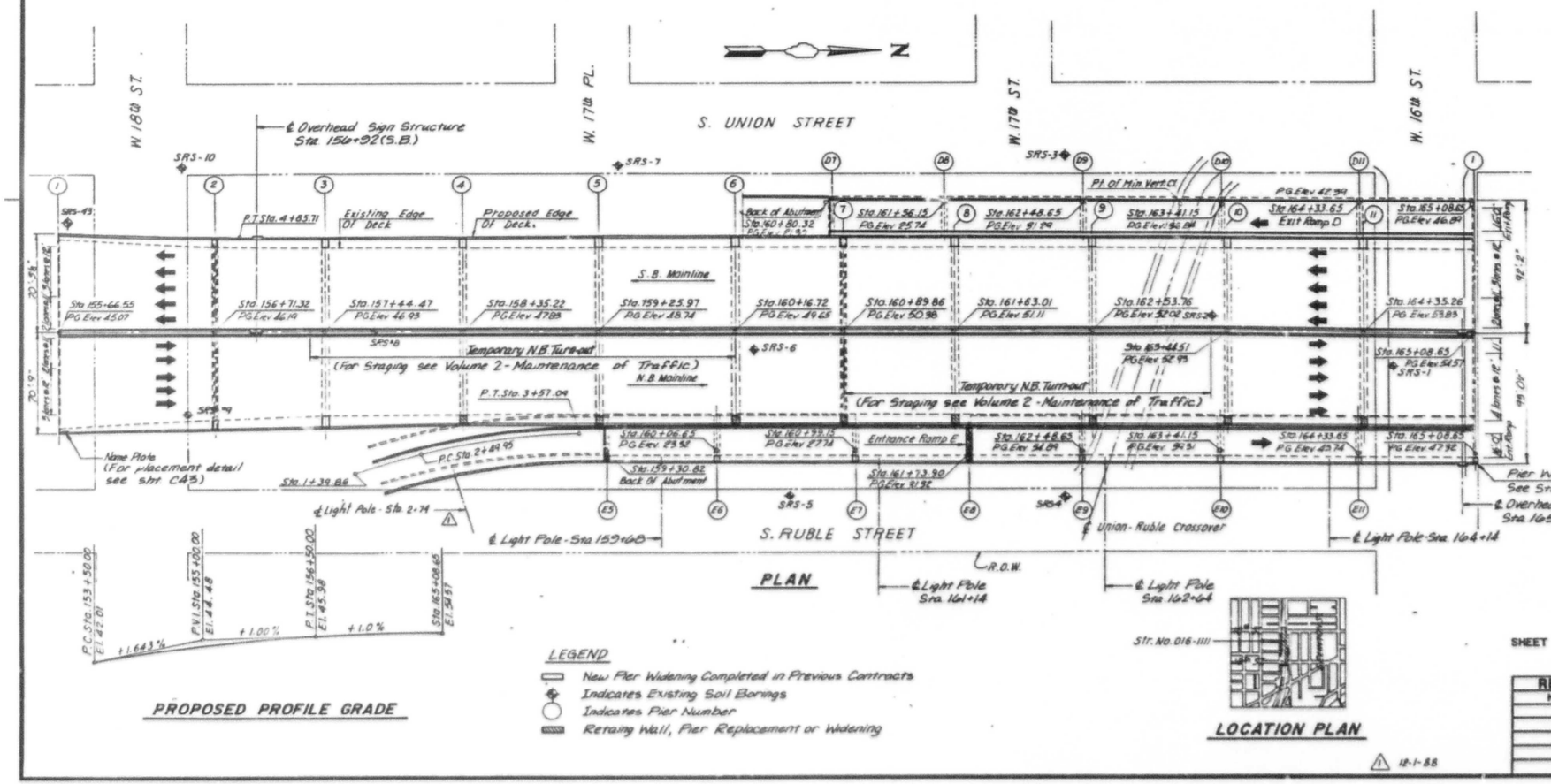

PLAN

PROPOSED PROFILE GRADE

LEGEND
- New Pier Widening Completed in Previous Contracts
- Indicates Existing Soil Borings
- Indicates Pier Number
- Retaining Wall, Pier Replacement or Widening

LOCATION PLAN

12-1-88

APPROVED
FOR STRUCTURAL ADEQUACY ONLY
James J. Zeyhersd

SHEET C3 OF C51

REVISIONS	
Name	Date

STATE OF ILLINOIS
DEPARTMENT OF TRANSPORTATION
F.A.I. ROUTE 90/94 (DAN RYAN EXPRESSWAY)
SECTION 1985 - 077BR - COOK COUNTY
N.B. MAINLINE RECONSTRUCTION
STRUCTURE 016 - 1111
GENERAL PLAN
Scale: NONE
Date: AUG., 1988
Drawn By: M.N.S.
Checked By: H.E.H.
ENVIRODYNE ENGINEERS INC.
Chicago, Illinois

FILE NAME: pw:\AECOM-NA-AWS1.aecomonline.local:AECOM_DS02_NAIDocuments\01 Americas\Transportation\60269938 Circle\Phase_II\000_CAD\008_Structural\Sign Structures\62A76 Sign Structure\62A76-Span-SS329-Exist Plans
12:38:24 PM

HBM ENGINEERING GROUP, LLC	USER NAME = francisco.lopez	DESIGNED - JMI	REVISED -	STATE OF ILLINOIS DEPARTMENT OF TRANSPORTATION	EXISTING RECORD DRAWINGS STRUCTURE NO. 016-1111
		CHECKED - MAI, JJS	REVISED -		SHEET NO.AS12-03 OF AS12-49SHEETS
	PLOT SCALE = N.T.S	DRAWN - JMI	REVISED -		
	PLOT DATE = 1/24/2020	CHECKED - MAI, JJS	REVISED -		

F.A.I. RTE.	SECTION	COUNTY	TOTAL SHEETS	SHEET NO.
90/94/290	2015-019R	COOK	2155	1440
			CONTRACT NO. 62A76	
		ILLINOIS	FED. AID PROJECT	

FOR INFORMATION ONLY

FEDERAL AID ROUTE NO.	SECTION	COUNTY	TOTAL SHEETS	SHEET NO.
90/94	*	COOK	51	
STA.	TO STA.			
FED. RD. DIST. NO.	ILLINOIS	FED. AID PROJECT		

*SECTION 1985-077BR

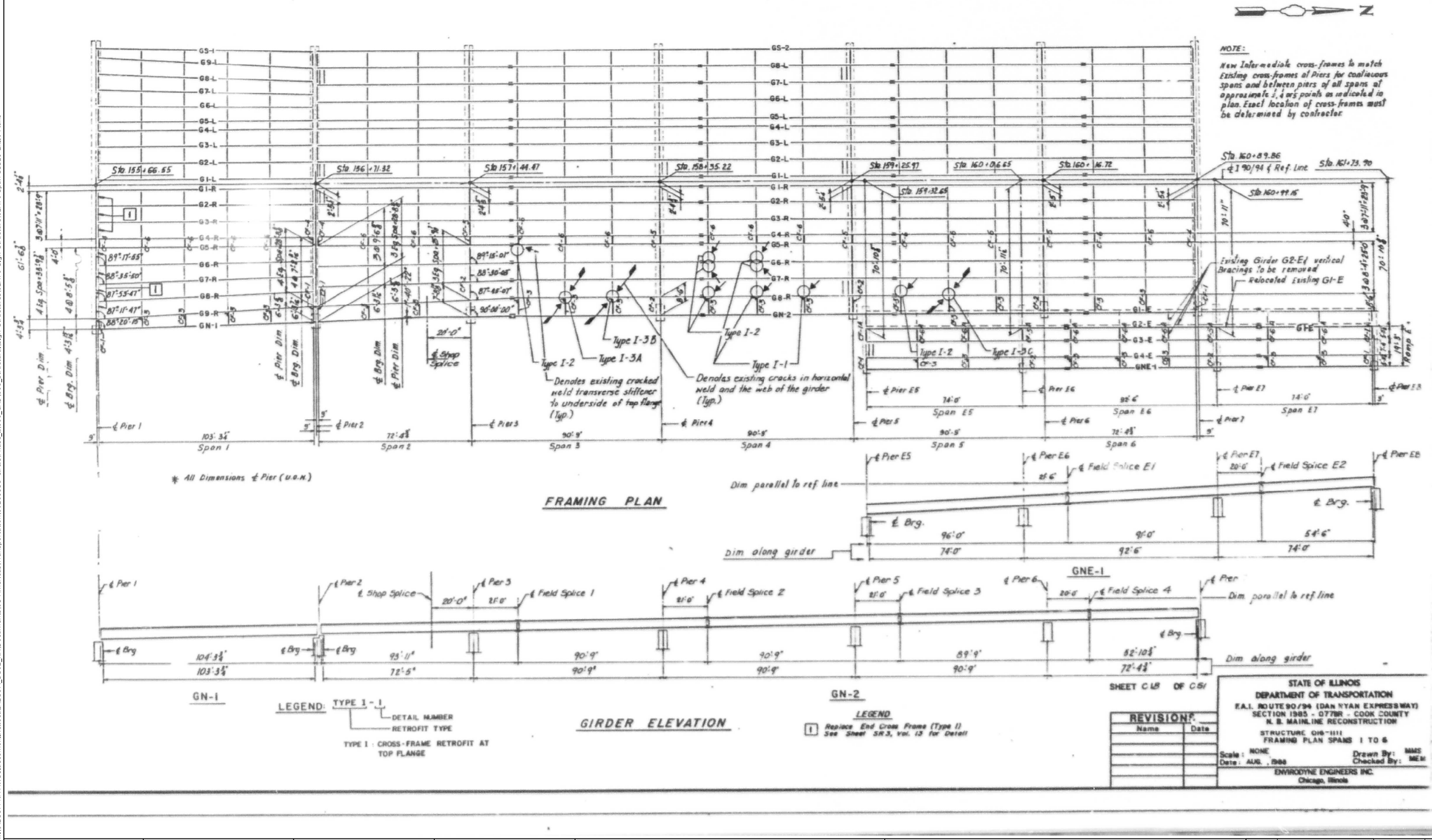

SHEET C 18 OF C 51

REVISIONS	
Name	Date

STATE OF ILLINOIS
DEPARTMENT OF TRANSPORTATION
F.A.I. ROUTE 90/94 (DAN RYAN EXPRESSWAY)
SECTION 1985 - 077BR - COOK COUNTY
N. B. MAINLINE RECONSTRUCTION
STRUCTURE 016-1111
FRAMING PLAN SPANS 1 TO 6

Scale: NONE
Date: AUG., 1988
Drawn By: MMS
Checked By: MEM

ENVIRODYNE ENGINEERS INC.
Chicago, Illinois

FILE NAME: pw:\AECOM-NA-AWS1.aecomonline.local\AECOM_DS02_NA\Documents\01 Americas\Transportation\60269938 Circle\Phase_II\000_CADD\008_Structural\Sign Structures\62A76 Sign Structure\62A76-Span-SS329-Exist Plans
12:38:29 PM

HBM ENGINEERING GROUP, LLC

USER NAME = francisco.lopez		DESIGNED - JMI		REVISED -	
		CHECKED - MAI, JJS		REVISED -	
PLOT SCALE = N.T.S		DRAWN - JMI		REVISED -	
PLOT DATE = 1/24/2020		CHECKED - MAI, JJS		REVISED -	

STATE OF ILLINOIS
DEPARTMENT OF TRANSPORTATION

EXISTING RECORD DRAWINGS
STRUCTURE NO. 016-1111
SHEET NO.AS12-04 OF AS12-49SHEETS

F.A.I. RTE.	SECTION	COUNTY	TOTAL SHEETS	SHEET NO.
90/94/290	2015-019R	COOK	2155	1441
		CONTRACT NO. 62A76		
	ILLINOIS	FED. AID PROJECT		

FOR INFORMATION ONLY

FEDERAL AID ROUTE NO.	SECTION	COUNTY	TOTAL SHEETS	SHEET NO.
90/94	6	COOK	51	19
STA.	TO STA.			
FED. RD. DIST. NO.	ILLINOIS	FED. AID PROJECT		

SECTION 1985-077BR

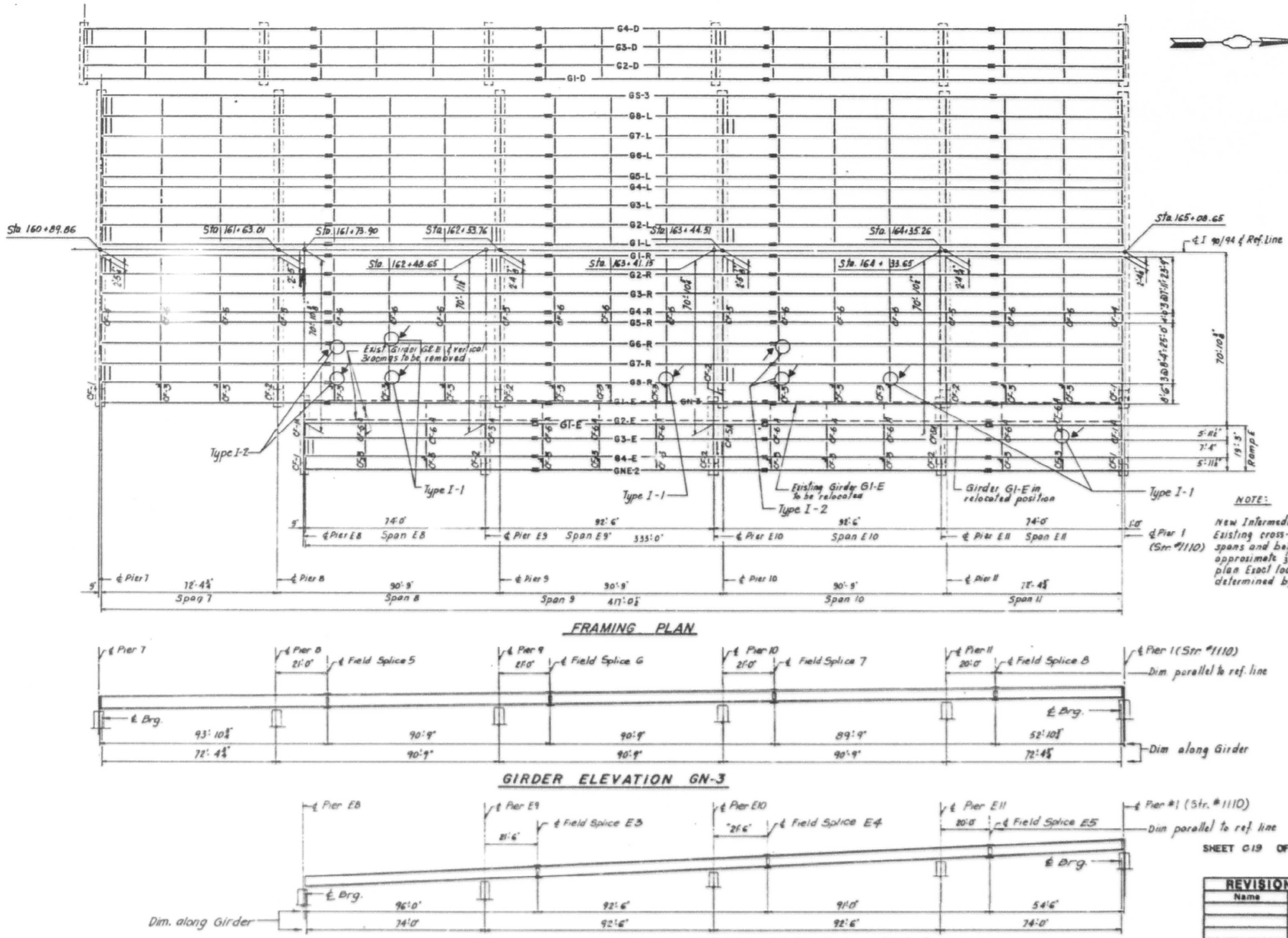

NOTE:

New Intermediate cross-frames to match Existing cross-frames at Piers for continuous spans and between piers of all spans at approximate $\frac{1}{3}$, $\frac{1}{2}$ or $\frac{2}{3}$ points as indicated in plan. Exact location of cross-frames must be determined by contractor.

FRAMING PLAN

GIRDER ELEVATION GN-3

GIRDER ELEVATION GNE-2

SHEET 019 OF C51

REVISIONS	
Name	Date

STATE OF ILLINOIS
DEPARTMENT OF TRANSPORTATION
F.A.I. ROUTE 90/94 (DAN RYAN EXPRESSWAY)
SECTION 1985 - 077BR - COOK COUNTY
N. B. MAINLINE RECONSTRUCTION
STRUCTURE 016-1111
FRAMING PLAN SPANS 7 TO 11

Scale: NONE — Drawn By: MMS
Date: AUG., 1988 — Checked By: MEM

ENVIRODYNE ENGINEERS INC.
Chicago, Illinois

FILE NAME: pw:\\AECOM-NA-AWS1.aecomonline.local:AECOM_DS02_NA\Documents\01 Americas\Transportation\60269938 Circle\Phase_II\000_CAD\008_Structural\Sign Structures\62A76 Sign Structure\62A76-Span-SS329-Exist Plans
12:38:34 PM

HBM ENGINEERING GROUP, LLC

USER NAME = francisco.lopez	DESIGNED - JMI	REVISED -
	CHECKED - MAI, JJS	REVISED -
PLOT SCALE = N.T.S	DRAWN - JMI	REVISED -
PLOT DATE = 1/24/2020	CHECKED - MAI, JJS	REVISED -

STATE OF ILLINOIS
DEPARTMENT OF TRANSPORTATION

EXISTING RECORD DRAWINGS
STRUCTURE NO. 016-1111
SHEET NO.AS12-05 OF AS12-49SHEETS

F.A.I. RTE.	SECTION	COUNTY	TOTAL SHEETS	SHEET NO.
90/94/290	2015-019R	COOK	2155	1442
		CONTRACT NO. 62A76		
	ILLINOIS	FED. AID PROJECT		

FOR INFORMATION ONLY

MOMENT, REACTION & STRESS TABLE

* 1985-077BR

FEDERAL AID ROUTE NO.	SECTION	COUNTY	TOTAL SHEETS	SHEET NO.
90/94	8	COOK	51	20
STA.		TO STA.		
FED. RD. DIST. NO.	ILLINOIS	FED. AID PROJECT		

Location	SPAN 1 GN-1			SPAN 2 thru 6 GIRDER GN-2											SPAN 7 thru 11 GIRDER GN-3											Location
	℄ Brg 1	0.5 l	℄ Brg 2	℄ Brg 2	0.4 l	℄ Brg 3	0.5 l	℄ Brg 4	0.5 l	℄ Brg 5	0.5 l	℄ Brg 6	0.6 l	℄ Brg 7	℄ Brg 7	0.4 l	℄ Brg 8	0.5 l	℄ Brg 9	0.5 l	℄ Brg 10	0.5 l	℄ Brg 11	0.6 l	℄ Brg 1	
Is (in^4)		40906			147127	232401	147127	257511	147127	257511	147127	232401	147127			147127	232401	147127	257511	147127	257511	147127	232401	147127		Is (in^4)
Ic (in^4)		87403			352666	232401	358351	257511	358351	257511	358351	232401	358351			358351	232401	358351	257511	358351	257511	358351	232401	358351		Ic (in^4)
Ss (in^3)		1511			5951	9301	5951	10251	5951	10251	5951	9301	5951			5951	9301	5951	10251	5951	10251	5951	9301	5951		Ss (in^3)
Sc (in^3)		1910			8271	9301	8311	10251	8311	10251	8311	9301	8311			8311	9301	8311	10251	8311	10251	8311	9301	8311		Sc (in^3)
W℄ (k/ft)		0.808			0.822		0.922		0.922		0.922		0.922			0.922		0.922		0.922		0.922		0.922		W℄ (k/ft)
M℄ (ft-k)		1068.2			2710	6291	2895	6891	2671	6774	2800	6621	3143			3146	6618	2790	6801	2703	6801	2790	6618	3772		M℄ (ft-k)
fs-non-comp. (ksi)		8.48			5.47	8.12	5.84	8.07	5.39	7.39	5.65	8.55	6.34			6.34	8.54	5.63	7.96	5.45	7.96	5.63	8.54	7.61		fs-non-comp. (ksi)
Ws℄ (k/ft)		0.106			0.118		0.118		0.118		0.118		0.118			0.118		0.118		0.118		0.118		0.118		Ws℄ (k/ft)
Ms℄ (ft-k)		141.4			47.6	69.8	50.8	75.7	47.8	75.7	50.9	69.6	47.7			47.6	69.6	50.9	75.7	47.8	75.7	50.9	69.6	47.6		Ms℄ (ft-k)
Mℓ (ft-k)		760.8			5287	4311	6555	5130	6591	5219	6550	4634	6493			6239	4641	6551	5230	6591	5229	6550	4633	6488		Mℓ (ft-k)
M imp. (ft-k)		166.6			1287	1043	1521	1213	1529	1211	1520	1121	1567			1678	1123	1520	1213	1529	1213	1520	1121	1566		M imp. (ft-k)
M total (ft-k)		1068.8			6585	6054	8588	7200	8598	7187	8578	6451	8237			8293	6460	8581	7200	8598	7199	8578	6451	8226		M total (ft-k)
fs comp.(ksi)		6.71			4.94	7.81	12.40	8.43	12.42	8.41	12.39	8.32	11.89			11.98	8.34	12.39	8.43	12.42	8.43	12.39	8.32	11.88		fs comp.(ksi)
fs total (ksi)		15.91			15.41	15.93	18.24	16.50	17.81	16.34	18.04	16.87	18.23			18.32	16.88	18.02	16.39	17.87	16.39	18.02	16.86	17.49		fs total (ksi)
V range (k)		36.1			12.5		58.5		59.1		58.2		57.5			56.3		59.5		59.3		58.2		57.5		V range (k)
R℄ (k)	45.7		46.9	24.7		90.9		96.7		95.9		95.7		26.6	27.6		95.6		96.1		96.1		95.6		27.6	R℄ (k)
Rℓ (k)	28.2		29.6	31.4		50.5		60.6		60.8		58.2		41.1	40.3		58.2		60.9		60.9		58.2		41.1	Rℓ (k)
R imp. (k)	6.2		6.5	7.9		12.2		14.1		14.1		14.1		10.4	10.2		14.1		14.1		14.1		14.1		10.4	R imp. (k)
R total (k)	80.1		83.0	64.0		153.6		171.7		170.8		168.0		79.1	78.1		167.9		171.1		171.1		167.9		79.1	R total (k)

Location	SPAN E5 thru E7 GIRDER GNE-1							SPAN E8 thru E11 GIRDER GNE-2								Location
	℄ Brg E5	0.4 l	℄ Brg E6	0.5 l	℄ Brg E7	0.6 l	℄ Brg E8	℄ Brg E8	0.4 l	℄ Brg E9	0.5 l	℄ Brg E10	0.5 l	℄ Brg E11	0.6 l	℄ Brg 1	
Is (in^4)		147127	257511	147127	257511	147127			147127	257511	147127	257511	147127	257511	147127		Is (in^4)
Ic (in^4)		347571	257511	347571	257511	347571			347571	257511	347571	257511	347571	257511	347571		Ic (in^4)
Ss (in^3)		5951	10251	5951	10251	5951			5951	10251	5961	10251	5961	10251	5951		Ss (in^3)
Sc (in^3)		8231	10251	8231	10251	8231			8231	10251	8231	10251	8231	10251	8231		Sc (in^3)
W℄ (k/ft)		0.792		0.792		0.792			0.792		0.792		0.792		0.792		W℄ (k/ft)
M℄ (ft-k)		2785	6070	2435	6070	2785			2788	6063	2428	6091	2428	6063	2788		M℄ (ft-k)
fs-non-comp. (ksi)		5.62	7.11	4.91	7.11	5.62			5.62	7.10	4.90	7.13	4.90	7.10	5.62		fs-non-comp. (ksi)
Ws℄ (k/ft)		0.265		0.265		0.265			0.265		0.265		0.265		0.265		Ws℄ (k/ft)
Ms℄ (ft-k)		1065	1691	1113	1691	1065			1074	1668	1109	1784	1109	1668	1074		Ms℄ (ft-k)
Mℓ (ft-k)		4724	3692	4906	3687	4705			4767	3770	4955	4089	4956	3765	4720		Mℓ (ft-k)
M imp (ft-k)		1194	884	1128	884	1181			1197	905	1140	940	1140	904	1185		M imp. (ft-k)
M total (ft-k)		7025	6296	7177	6263	6951			7054	6343	7205	6813	7205	6337	6979		M total (ft-k)
fs comp.(ksi)		10.24	7.34	10.46	7.33	10.14			10.24	7.43	10.61	7.98	10.51	7.42	10.18		fs comp.(ksi)
fs total (ksi)		15.86	14.46	15.37	14.44	15.76			15.88	14.53	15.41	15.11	15.41	14.52	15.80		fs total (ksi)
V range (k)		42.3		43.9		42.9			42.4		44.7		43.8		43.0		V range (k)
R℄ (k)	28.7		99.8		99.8		28.7	28.7		99.6		99.6		99.6		28.7	R℄ (k)
Rℓ (k)	30.2		43.8		43.8		30.6	30.2		44.3		46.8		44.3		30.6	Rℓ (k)
R imp. (k)	7.6		10.5		10.5		7.7	7.6		10.6		10.5		10.6		7.7	R imp. (k)
R total (k)	66.5		154.1		154.1		67.0	66.5		154.5		155.9		154.5		67.0	R total (k)

Legend

I_s and S_s are the moment of inertia and section modulus of the steel section used in computing f_s TOTAL.

I_c and S_c are the moment of inertia and section modulus of the composite section used in computing f_s TOTAL.

VR is the maximu ℓ + impact shear range in span.

SHEET C20 OF C51

REVISIONS	
Name	Date

STATE OF ILLINOIS
DEPARTMENT OF TRANSPORTATION
F.A.I. ROUTE 90/94 (DAN RYAN EXPRESSWAY)
SECTION 1985-077BR- COOK COUNTY
N.B. MAINLINE RECONSTRUCTION
STRUCTURE 016-
MOMENT, REACTION & STRESS TABLE
Scale : NONE
Date : AUG. , 1988
Drawn By : A.V.
Checked By : M.E.M.
ENVIRODYNE ENGINEERS INC.
Chicago, Illinois

HBM ENGINEERING GROUP, LLC

USER NAME = francisco.lopez	DESIGNED - JMI	REVISED -
	CHECKED - MAI, JJS	REVISED -
PLOT SCALE = N.T.S	DRAWN - JMI	REVISED -
PLOT DATE = 1/24/2020	CHECKED - MAI, JJS	REVISED -

STATE OF ILLINOIS
DEPARTMENT OF TRANSPORTATION

EXISTING RECORD DRAWINGS
STRUCTURE NO. 016-1111
SHEET NO.AS12-06 OF AS12-49SHEETS

F.A.I. RTE.	SECTION	COUNTY	TOTAL SHEETS	SHEET NO.
90/94/290	2015-019R	COOK	2155	1443
		CONTRACT NO. 62A76		
	ILLINOIS	FED. AID PROJECT		

FILE NAME: pw:\\AECOM-NA-AWS1.aecomonline.local:AECOM_DS02_NADocuments\01 Americas\Transportation\60269938 Circle\Phase_II\000_CAD\008_Structural\Sign Structures\62A76 Sign Structure\62A76-Span-55329-Exist Plans

12:38:40 PM

FOR INFORMATION ONLY

FEDERAL AID ROUTE NO.	SECTION	COUNTY	TOTAL SHEETS	SHEET NO.
90/94	*	COOK	51	21
STA.		TO STA.		
FED. RD. DIST. NO.	ILLINOIS	FED. AID PROJECT		

* 1985-077-BR

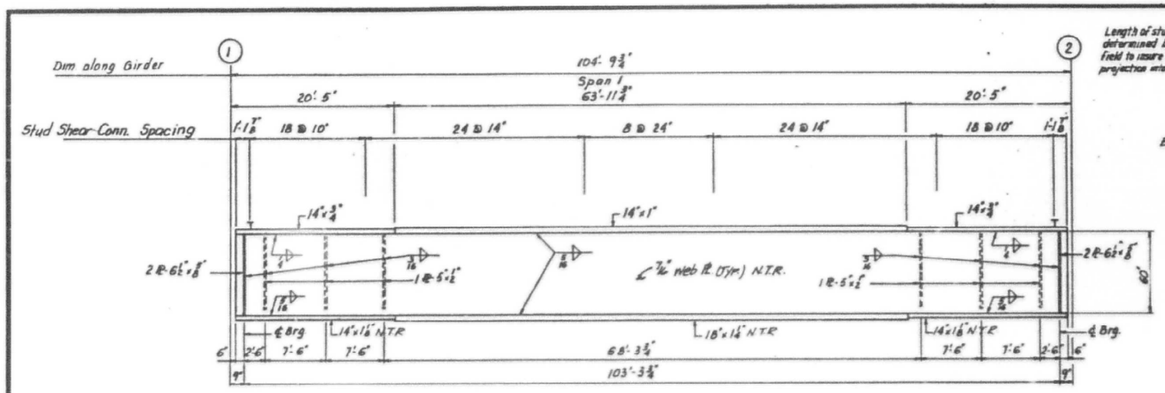

GIRDER GN-1 ELEVATION - SPAN 1

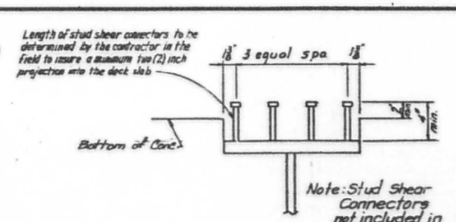

TYPICAL DETAIL OF STUD SHEAR CONNECTORS

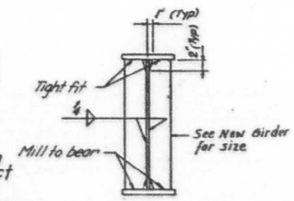

BEARING STIFFENER DET.

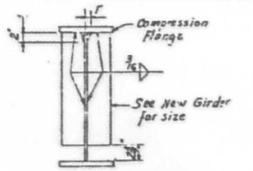

INTERMEDIATE STIFF. DET.

Note:
Stud Shear Connector locations at flange splice plates to be adjusted by installer, to miss splice bolts.
All dimensions are along Girder in horizontal plane
N.T.R. Notch toughness requirement

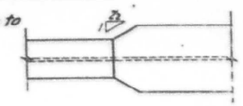

FLANGE WIDTH TRANSITION DETAIL

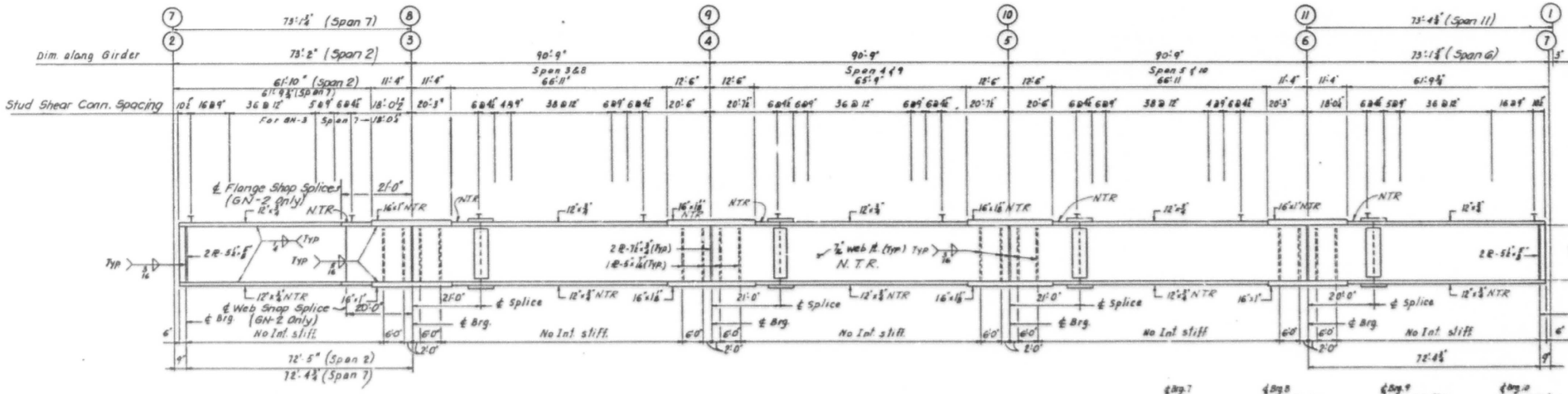

GIRDER GN-2 ELEVATION - SPAN 2 TO 6

GIRDER GN-3 ELEVATION - SPAN 7 TO 11

All materials shown on this sheet, except for stud shear connectors, furnished under a separate Steel Fabrication Contract (1988-003 F), unless noted otherwise.

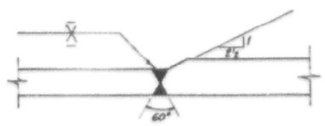

FLANGE BOTT. WELD DETAIL

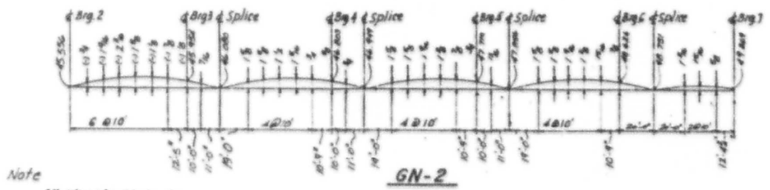

Note
All elevations to top of web

GN-2 CAMBER DIAGRAM

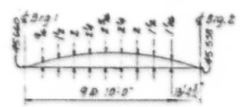

GN-1 CAMBER DIAGRAM

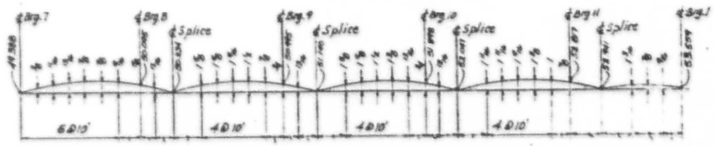

GN-3 CAMBER DIAGRAM

SHEET C.21 OF C.51

REVISIONS	
Name	Date

STATE OF ILLINOIS
DEPARTMENT OF TRANSPORTATION
F.A.I. ROUTE 90/94 (DAN RYAN EXPRESSWAY)
SECTION 1985-077 BR COOK COUNTY
N.B. MAINLINE RECONSTRUCTION
STRUCTURE 016-1111
NEW GIRDER GN-1 THRU GN-3
Scale : NONE — Drawn By : J.B.
Date : AUG. , 1988 — Checked By : M.E.M.
ENVIRODYNE ENGINEERS INC.
Chicago, Illinois

FILE NAME: pw:\AECOM-NA-AWS1.aecomonline.local:AECOM_DS02_NAIDocuments\01 Americas\Transportation\60269938 Circle\Phase_II\000_CAD\008_Structural\Sign Structures\62A76 Sign Structure\62A76-Span-SS329-Exist Plans

12:38:45 PM

HBM ENGINEERING GROUP, LLC

USER NAME = francisco.lopez	DESIGNED - JMI	REVISED -
	CHECKED - MAI, JJS	REVISED -
PLOT SCALE = N.T.S	DRAWN - JMI	REVISED -
PLOT DATE = 1/24/2020	CHECKED - MAI, JJS	REVISED -

STATE OF ILLINOIS
DEPARTMENT OF TRANSPORTATION

EXISTING RECORD DRAWINGS
STRUCTURE NO. 016-1111
SHEET NO.AS12-07 OF AS12-49SHEETS

F.A.I. RTE.	SECTION	COUNTY	TOTAL SHEETS	SHEET NO.
90/94/290	2015-019R	COOK	2155	1444
		CONTRACT NO. 62A76		
	ILLINOIS	FED. AID PROJECT		

FOR INFORMATION ONLY

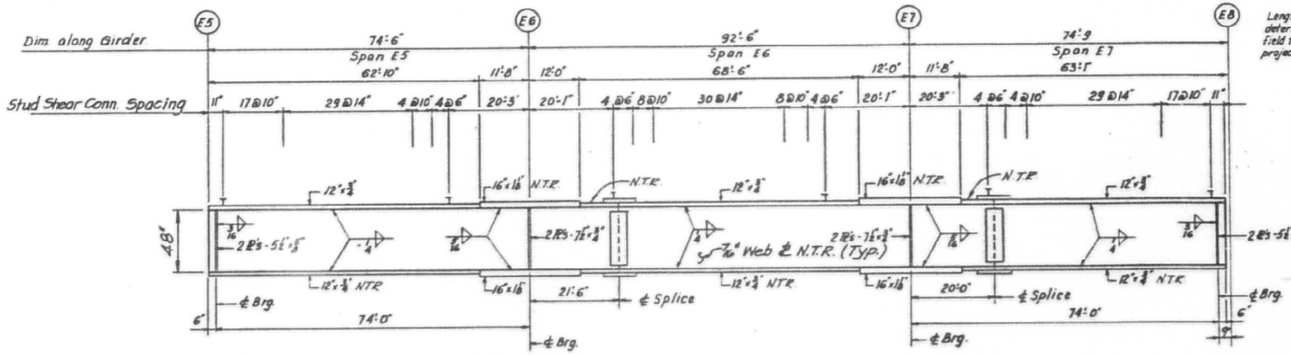

GIRDER GNE-1 ELEVATION - SPAN E5 TO E7

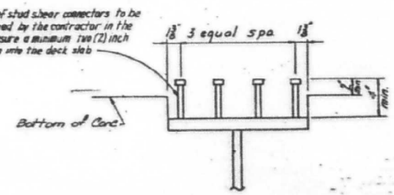

TYPICAL DETAIL OF STUD SHEAR CONNECTORS

1. Stud Shear Connector locations at flange splice plates adjusted by installer to miss splice bolts.
2. All dimensions are along girder in horizontal plane.
3. N.T.R. – Notch Toughness Requirement.

FEDERAL AID ROUTE NO.	SECTION	COUNTY	TOTAL SHEETS	SHEET NO.
90/94	*	COOK	51	22
STA.		TO STA.		
FED. RD. DIST. NO.	ILLINOIS	FED. AID PROJECT		

* 1985-077-BR

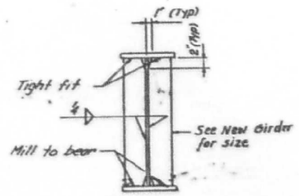

BEARING STIFFENER DET.

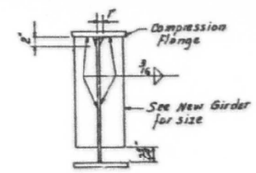

INTERMEDIATE STIFF. DET.

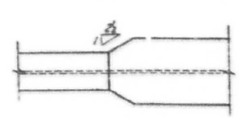

FLANGE WIDTH TRANSITION DETAIL

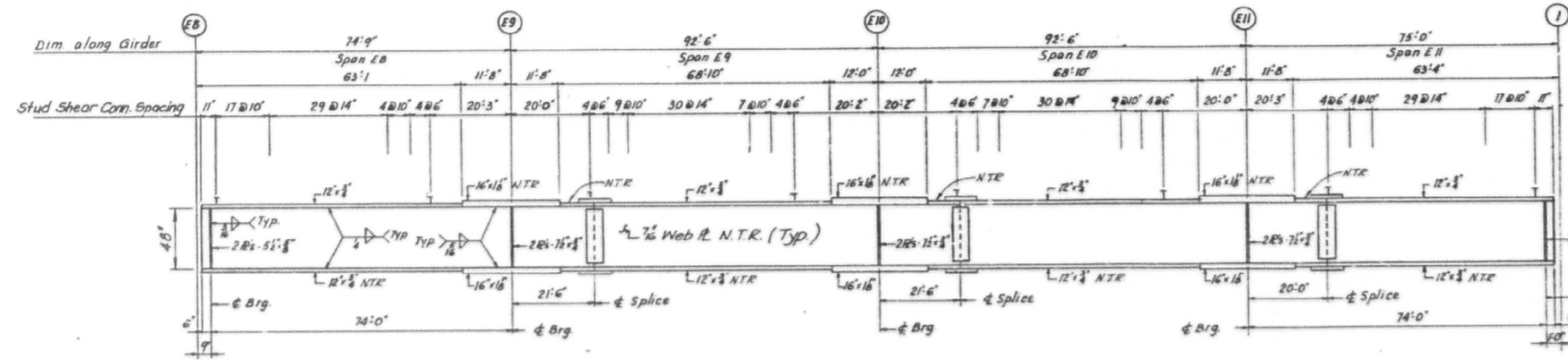

GIRDER GNE-2 ELEVATION - SPAN E8 TO E11

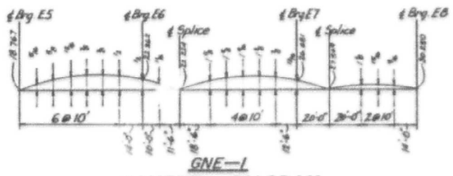

GNE-1 CAMBER DIAGRAM

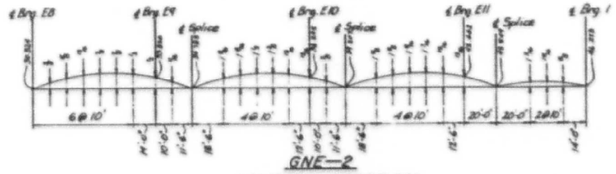

GNE-2 CAMBER DIAGRAM

All materials shown on this sheet, except for stud shear connectors, furnished under a separate Steel Fabrication Contract (Section 1988-003 F), unless noted otherwise.

SHEET C 22 OF C 51

REVISIONS	
Name	Date

STATE OF ILLINOIS
DEPARTMENT OF TRANSPORTATION
F.A.I. ROUTE 90/94 (DAN RYAN EXPRESSWAY)
SECTION 1985-077 BR COOK COUNTY
N.B. MAINLINE RECONSTRUCTION
STRUCTURE 016-1111
NEW GIRDER GNE-1 THRU GNE-2
Scale : NONE
Date : AUG. , 1988
Drawn By : J.G.
Checked By : M.E.M.
ENVIRODYNE ENGINEERS INC.
Chicago, Illinois

FILE NAME: pw:\\AECOM-NA-AWS1.aecomonline.local:AECOM_DS02_NA\Documents\01 Americas\Transportation\60269938 CirclePhase_1\1000_CAD\008_Structural\Sign Structures\62A76 Sign Structure\62A76-Span-SS329-Exist Plans
12:38:50 PM

HBM ENGINEERING GROUP, LLC	USER NAME = francisco.lopez	DESIGNED - JMI	REVISED -	STATE OF ILLINOIS DEPARTMENT OF TRANSPORTATION	EXISTING RECORD DRAWINGS STRCUTURE NO. 016-1111
		CHECKED - MAI, JJS	REVISED -		
	PLOT SCALE = N.T.S	DRAWN - JMI	REVISED -		SHEET NO.AS12-08 OF AS12-49SHEETS
	PLOT DATE = 1/24/2020	CHECKED - MAI, JJS	REVISED -		

F.A.I. RTE.	SECTION	COUNTY	TOTAL SHEETS	SHEET NO.
90/94/290	2015-019R	COOK	2155	1445
		CONTRACT NO. 62A76		
	ILLINOIS	FED. AID PROJECT		

FOR INFORMATION ONLY

FEDERAL AID ROUTE NO.	SECTION	COUNTY	TOTAL SHEETS	SHEET NO.
90/94	*	COOK	51	25
STA.		TO STA.		
FED. RD. DIST. NO.	ILLINOIS	FED. AID PROJECT		

* 1985-077-BR

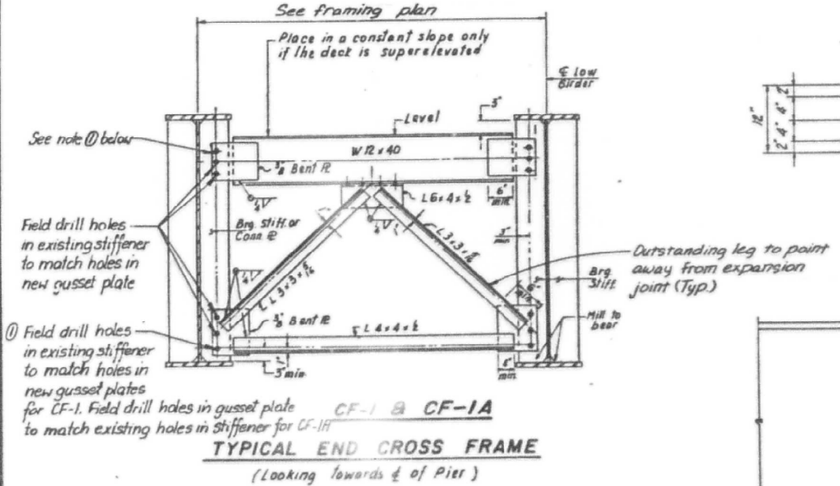

TYPICAL END CROSS FRAME

(Looking towards ℄ of Pier)

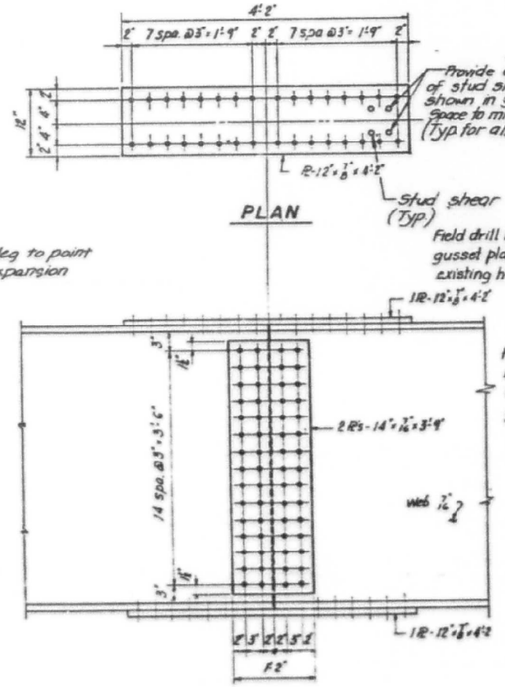

GIRDER FIELD SPLICE DETAIL

(All New Girders)

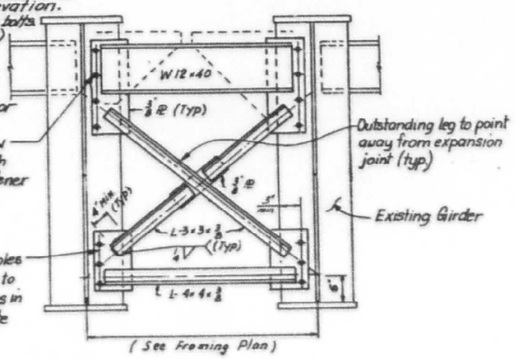

CF-4

TYPICAL END CROSS FRAME

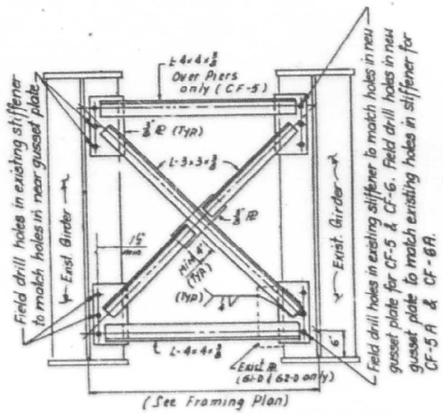

CF-5, CF-5A, CF-6 & CF-6A

TYPICAL INTERIOR CROSS FRAME

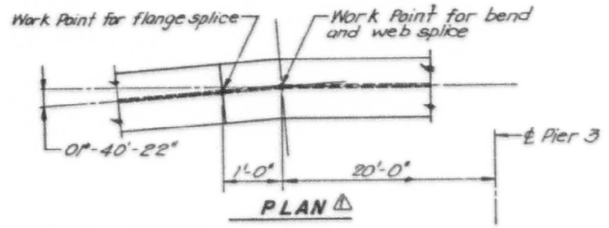

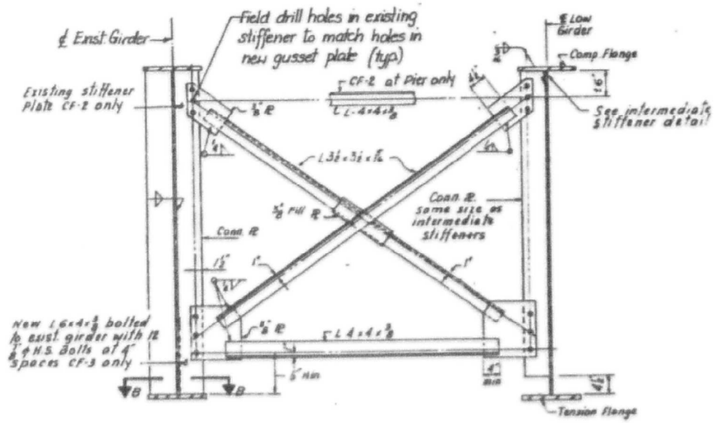

CF-2 & CF-3

TYPICAL INTERIOR CROSS FRAME

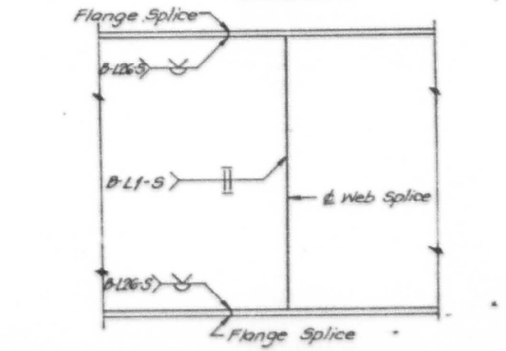

ELEVATION - GIRDER SHOP SPLICE DETAIL

(GIRDER GN-2, SPAN 2)

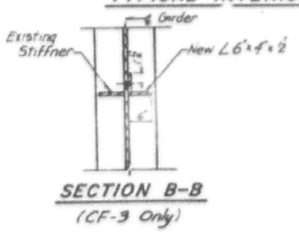

SECTION B-B

(CF-3 Only)

- NTR — Notch Toughness Requirement, all Splice Plates

All materials shown on this sheet furnished under a separate Steel Fabrication Contract (Section 1988-003 F), unless noted otherwise.

SHEET C 23 OF C 51

REVISIONS	
Name	Date

STATE OF ILLINOIS
DEPARTMENT OF TRANSPORTATION
F.A.I. ROUTE 90/94 (DAN RYAN EXPRESSWAY)
SECTION 1985-077 BR COOK COUNTY
N.B. MAINLINE RECONSTRUCTION
STRUCTURE 016-1111
CROSS FRAME & SPLICE DETAILS
Scale: NONE Drawn By: J.G.
Date: AUG., 1988 Checked By: M.E.M.
ENVIRODYNE ENGINEERS INC.
Chicago, Illinois

HBM ENGINEERING GROUP, LLC	USER NAME = francisco.lopez	DESIGNED - JMI	REVISED -	
		CHECKED - MAI, JJS	REVISED -	
	PLOT SCALE = N.T.S	DRAWN - JMI	REVISED -	
	PLOT DATE = 1/24/2020	CHECKED - MAI, JJS	REVISED -	

STATE OF ILLINOIS
DEPARTMENT OF TRANSPORTATION

EXISTING RECORD DRAWINGS
STRUCTURE NO. 016-1111
SHEET NO.AS12-09 OF AS12-49SHEETS

F.A.I. RTE.	SECTION	COUNTY	TOTAL SHEETS	SHEET NO.
90/94/290	2015-019R	COOK	2155	1446
		CONTRACT NO. 62A76		
	ILLINOIS	FED. AID PROJECT		

FILE NAME: pw:\\AECOM-NA-AWS1.aecomonline.local:AECOM_DS02_NA\Documents\01 Americas\Transportation\60269938 CircleIPhase_II\000_CAD\008_Structural\Sign Structures\62A76 Sign Structure\62A76-Span-55329-Exist Plans

12:38:55 PM

FOR INFORMATION ONLY

FEDERAL AID ROUTE NO.	SECTION	COUNTY	TOTAL SHEETS	SHEET NO.
90/94	*	COOK	51	24
STA.		TO STA.		
FED. NO. DIST NO.	ILLINOIS	FED. AID PROJECT		

* 1985-077-BR

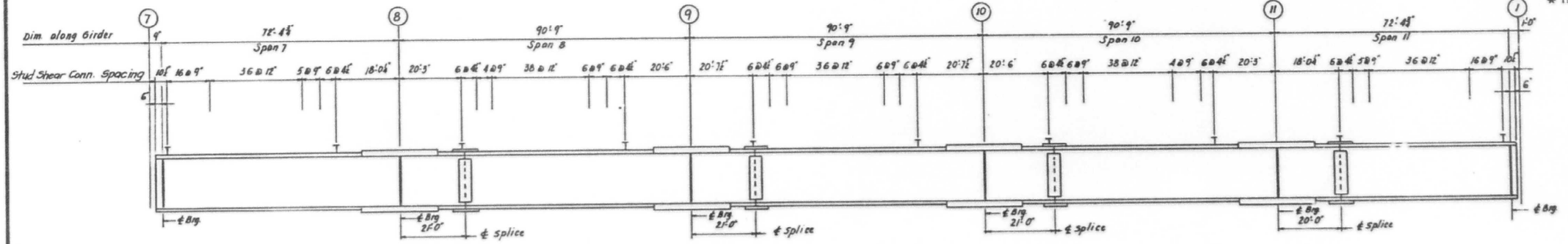

GIRDER G1 THRU G8 ELEVATION - SPAN 7 TO 11

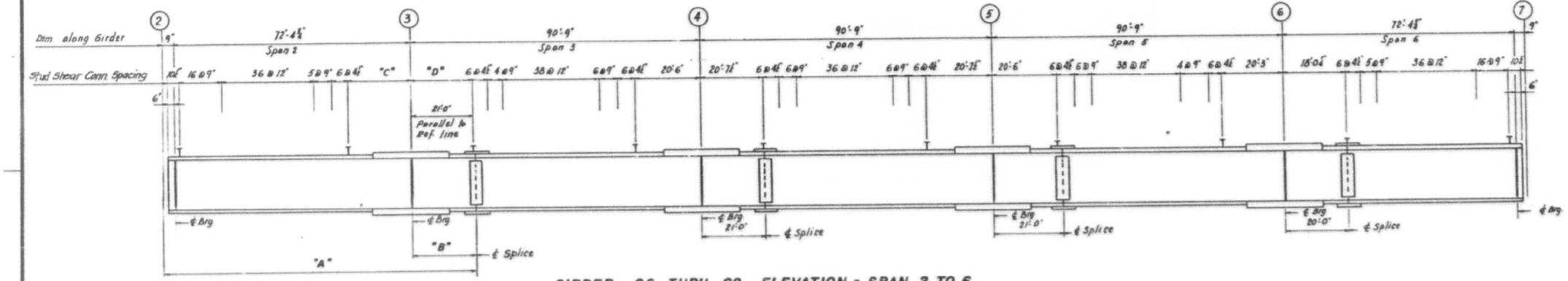

GIRDER G6 THRU G8 ELEVATION - SPAN 2 TO 6

GIRDER	"A"	"B"	"C"	"D"
G6-R	94'-1⅛"	21'-0"	18'-0⅝"	20'-3"
G7-R	94'-2⅛"	21'-0¼"	18'-0⅝"	20'-3¼"
G8-R	94'-2⅝"	21'-0⅜"	18'-0⅞"	20'-3¾"

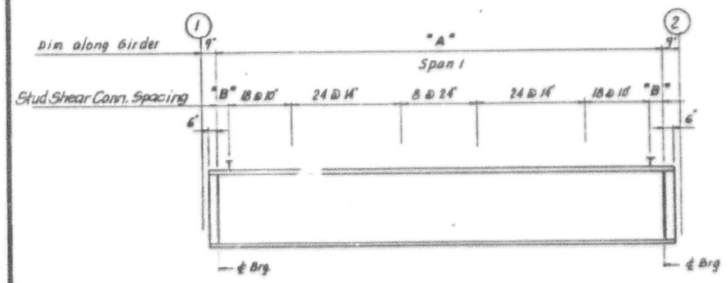

GIRDER G6 THRU G9 ELEVATION - SPAN 1

GIRDER	"A"	"B"
G6-R	103'-3⅛"	7⅞"
G7-R	103'-3⅜"	7 15/16"
G8-R	103'-4⅛"	8¼"
G9-R	103'-4⅜"	8⅝"

Length of stud shear connectors to be determined by the contractor in the field to insure a minimum two (2) inch projection into the deck slab.

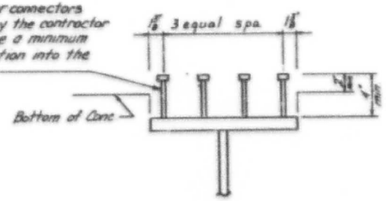

TYPICAL DETAIL OF STUD SHEAR CONNECTORS

Note:
1. Stud Shear Connector locations at flange splice plates to be adjusted by installer to miss splice bolts.
2. All dimensions are along Girder in horizontal plane.

SHEET C.24 OF C.51

REVISIONS	
Name	Date

STATE OF ILLINOIS
DEPARTMENT OF TRANSPORTATION
F.A.I. ROUTE 90/94 (DAN RYAN EXPRESSWAY)
SECTION 1985-077 BR COOK COUNTY
N.B. MAINLINE RECONSTRUCTION
STRUCTURE 016-1111
EXISTING GIRDER STUD SHEAR CONNECTOR SPACING
Scale : NONE Drawn By: J.G.
Date : AUG. , 1988 Checked By: M.E.M.
ENVIRODYNE ENGINEERS INC.
Chicago, Illinois

HBM ENGINEERING GROUP, LLC

USER NAME = francisco.lopez	DESIGNED - JMI	REVISED -
	CHECKED - MAI, JJS	REVISED -
PLOT SCALE = N.T.S	DRAWN - JMI	REVISED -
PLOT DATE = 1/24/2020	CHECKED - MAI, JJS	REVISED -

STATE OF ILLINOIS
DEPARTMENT OF TRANSPORTATION

EXISTING RECORD DRAWINGS
STRUCTURE NO. 016-1111
SHEET NO.AS12-10 OF AS12-49SHEETS

F.A.I. RTE.	SECTION	COUNTY	TOTAL SHEETS	SHEET NO.
90/94/290	2015-019R	COOK	2155	1447
		CONTRACT NO. 62A76		
		ILLINOIS	FED. AID PROJECT	

FILE NAME: pw:\\AECOM-NA-AWS1.aecomonline.local:AECOM_DS02_NA\Documents\01 Americas\Transportation\60269938 Circle\Phase_II\000_CAD\008_Structural\Sign Structures\62A76 Sign Structure\62A76-Span-55329-Exist Plans
12:39:00 PM

FOR INFORMATION ONLY

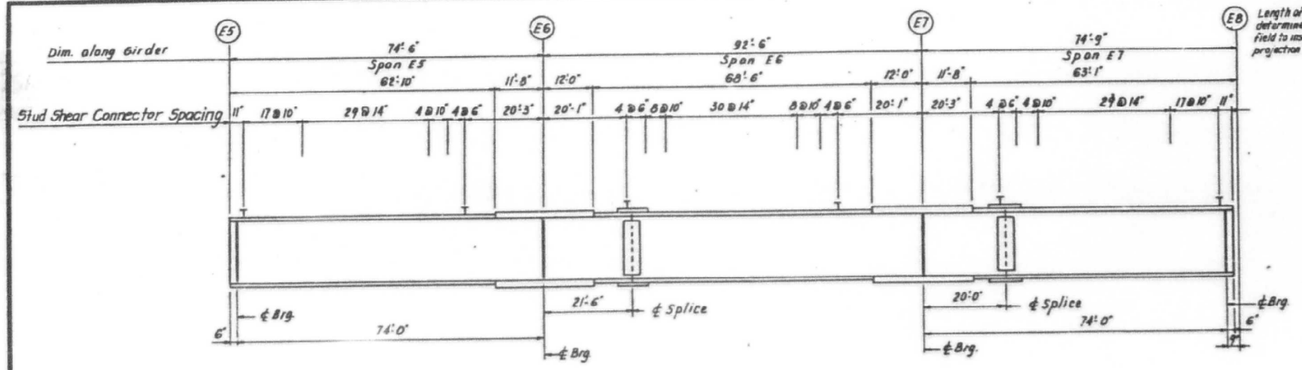

GIRDER G1-E, G3-E, G4-E ELEVATION - SPAN E5 TO E7

Length of stud shear connectors to be determined by the contractor in the field to insure a minimum two (2) inch projection into the deck slab

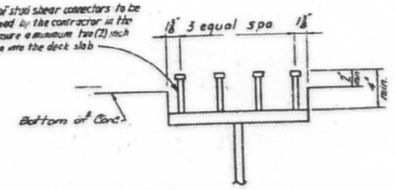

TYPICAL DETAIL OF STUD SHEAR CONNECTORS

Note:
1. Stud Shear Connector locations at flange splice plates to be adjusted by installer, to miss splice bolts.
2. All dimensions are along girder in horizontal plane.

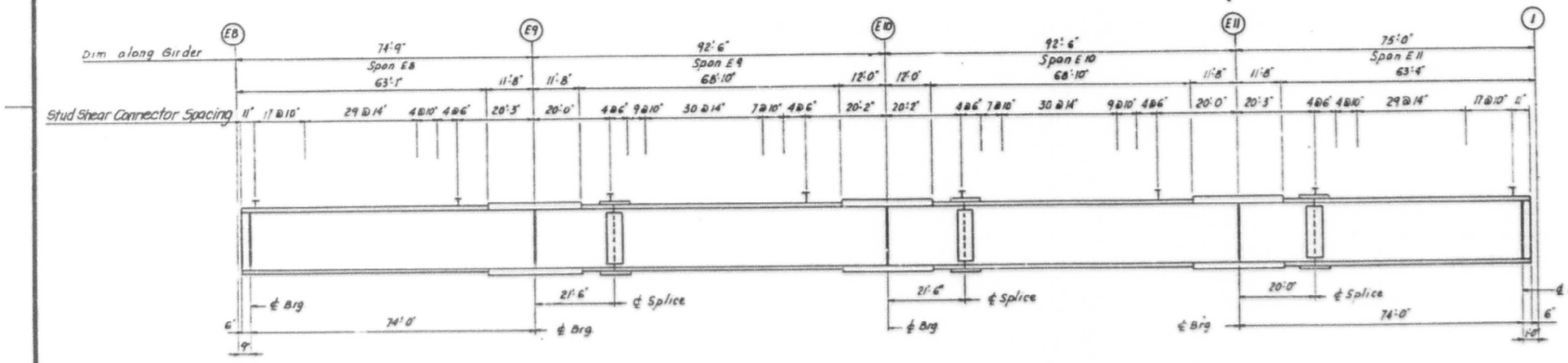

GIRDER G1-E, G3-E, G4-E ELEVATION - SPAN E8 TO E11

FEDERAL AID ROUTE NO.	SECTION	COUNTY	TOTAL SHEETS	SHEET NO.
90/94	*	COOK	51	25
STA.		TO STA.		
FED. RD. DIST. NO.	ILLINOIS	FED. AID PROJECT		

* 1985-077-BR

SHEET C 25 OF C 51

REVISIONS	
Name	Date

STATE OF ILLINOIS
DEPARTMENT OF TRANSPORTATION
F.A.I. ROUTE 90/94 (DAN RYAN EXPRESSWAY)
SECTION 1985-077 BR COOK COUNTY
N.B. MAINLINE RECONSTRUCTION
STRUCTURE 016-1111
EXISTING GIRDER STUD SHEAR CONNECTOR SPACING
Scale : NONE
Date : AUG. , 1988
Drawn By: J.G.
Checked By: M.E.M.
ENVIRODYNE ENGINEERS INC.
Chicago, Illinois

HBM ENGINEERING GROUP, LLC

USER NAME = francisco.lopez	DESIGNED - JMI	REVISED -	STATE OF ILLINOIS DEPARTMENT OF TRANSPORTATION	EXISTING RECORD DRAWINGS STRUCTURE NO. 016-1111	F.A.I. RTE. 90/94/290
	CHECKED - MAI, JJS	REVISED -			SECTION 2015-019R
PLOT SCALE = N.T.S	DRAWN - JMI	REVISED -			COUNTY COOK
PLOT DATE = 1/24/2020	CHECKED - MAI, JJS	REVISED -		SHEET NO.AS12-11 OF AS12-49SHEETS	TOTAL SHEETS 2155
					SHEET NO. 1448
					CONTRACT NO. 62A76
					ILLINOIS FED. AID PROJECT

FILE NAME: pw:\\AECOM-NA-AWS1.aecomonline.local:AECOM_D502_NAIDocuments\01 Americas\Transportation\60269938 CircletPhase_II\000_CAD\008_Structural\Sign Structures\62A76 Sign Structure\62A76-Span-55329-Exist Plans
12:39:06 PM

FOR INFORMATION ONLY

ROUTE NO.	SECTION	COUNTY	SHEETS	NO.
90/94	4	COOK	51	26
STA.		TO STA.		
FED. RD. INST NO.	ILLINOIS	FED. AID PROJECT		

1985-077BR

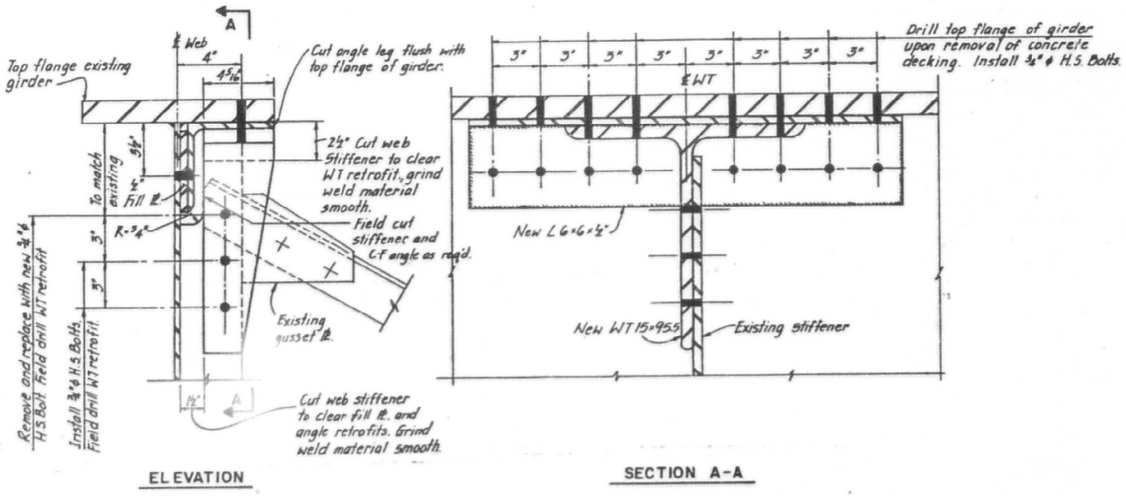

ELEVATION

SECTION A-A

TYPE I-3

Note "A": Existing web cracks have been field drilled with 1"ϕ holes by IDOT, at approx. the locations as shown. At time of repairs the engineer will determine if existing cracks have propagated since the holes were drilled. After the determination by the engineer the retrofit plates and angles to be installed by the contractor.

General Notes:
Contractor may fabricate retrofit hardware in shop using holes subpunched or subdrilled and reamed to full size in field.

Contractor may field drill all holes in retrofit hardware full size.

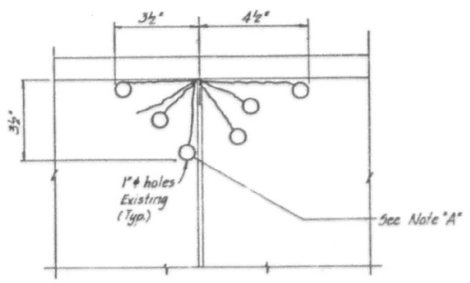

Type I - 3A
Span 3 - Girder GB-R
West Elevation

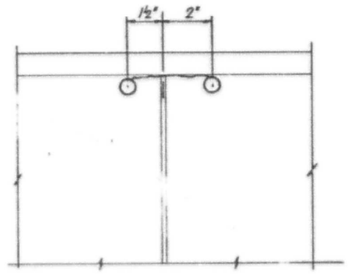

DETAIL SHOWING EXISTING CRACKS

Type I - 3B
Span 3 - Girder GB-R
West Elevation

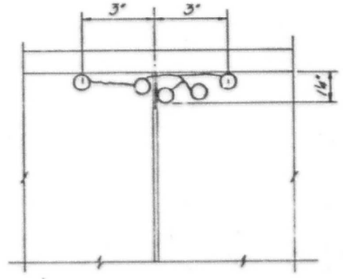

Type I - 3C
Span 5 - Girder GB-R
West Elevation

SCHEDULE OF QUANTITIES

STRUCTURE NO.	FATIGUE RETROFIT REPAIR TYPE	UNIT	QUANTITY
	I-3A	EA	1
	I-3B	EA	1
	I-3C	EA	1

SHEET C.26 OF C.51

REVISIONS	
Name	Date

STATE OF ILLINOIS
DEPARTMENT OF TRANSPORTATION
F.A.I. ROUTE 90/94 (DAN RYAN EXPRESSWAY)
SECTION 1985-077BR - COOK COUNTY
N.B. MAINLINE RECONSTRUCTION
RETROFIT REPAIRS - STRUCTURE 016-1111
FATIGUE RETROFIT REPAIR TYPE I-3
Scale: None
Date: AUG., 1988
Drawn By: D.C.
Checked By: W.B.
ENVIRODYNE ENGINEERS INC.
Chicago, Illinois

HBM ENGINEERING GROUP, LLC	USER NAME = francisco.lopez	DESIGNED - JMI	REVISED -	STATE OF ILLINOIS DEPARTMENT OF TRANSPORTATION	EXISTING RECORD DRAWINGS STRUCTURE NO. 016-1111
		CHECKED - MAI, JJS	REVISED -		
	PLOT SCALE = N.T.S	DRAWN - JMI	REVISED -		
	PLOT DATE = 1/24/2020	CHECKED - MAI, JJS	REVISED -		SHEET NO.AS12-12 OF AS12-49SHEETS

F.A.I. RTE.	SECTION	COUNTY	TOTAL SHEETS	SHEET NO.
90/94/290	2015-019R	COOK	2155	1449
		CONTRACT NO. 62A76		
	ILLINOIS	FED. AID PROJECT		

FILE NAME: pw:\\AECOM-NA-AWS1.aecomonline.local:AECOM_DS02_NAIDocuments\01 Americas\Transportation\60269938 Circle\Phase_II\000_CAD\008_Structural\Sign Structures\62A76 Sign Structure\62A76-Span-S5329-Exist Plans
12:39:10 PM

FOR INFORMATION ONLY

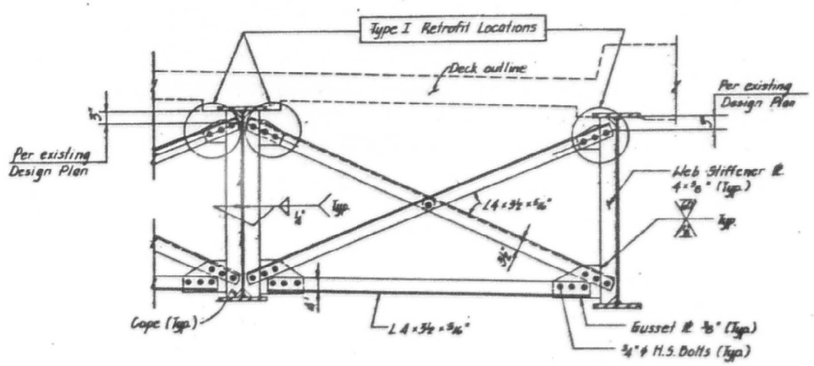

EXISTING TYPICAL CROSS-FRAME ELEVATION
(For structure No. 016-1111)

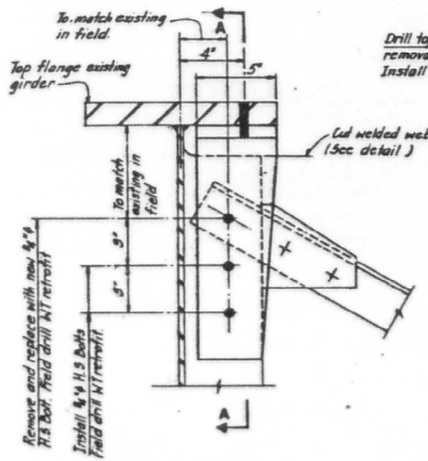

ELEVATION

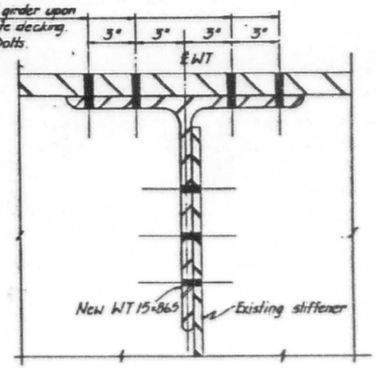

SECTION A-A

TYPE I-1

FEDERAL AID ROUTE NO.	SECTION	COUNTY	TOTAL SHEETS	SHEET NO.
90/94	#	COOK	51	27
STA.		TO STA.		
FED. RD. DIST. NO.	ILLINOIS	FED. AID PROJECT		

1985-077BR

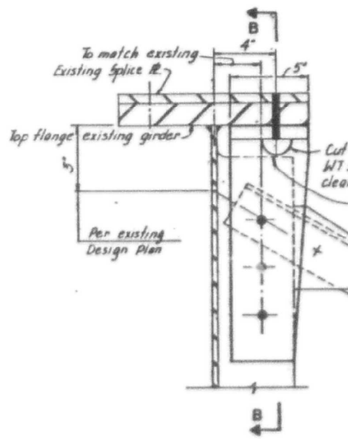

ELEVATION

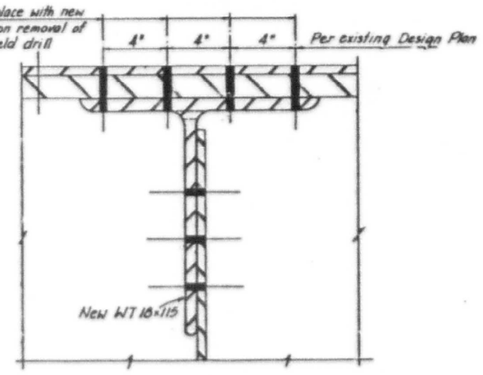

SECTION B-B

TYPE I-2
(Details not shown similar to Type I-1)

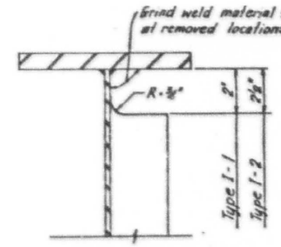

DETAIL AT CUT WEB STIFFENER

SCHEDULE OF QUANTITIES

STRUCTURE NO.	FATIGUE RETROFIT REPAIR TYPE	UNIT	QUANTITY.
016-1111	I-1	EACH	9
	I-2	EACH	9

General Notes:
Contractor may fabricate retrofit hardware in shop using holes subpunched or subdrilled reamed to full size in field.
Contractor may field drill all holes in retrofit hardware full size.

SHEET C.27 OF C.51

REVISIONS	
Name	Date

STATE OF ILLINOIS
DEPARTMENT OF TRANSPORTATION
F.A.I. ROUTE 90/94 (DAN RYAN EXPRESSWAY)
SECTION 1985-077BR — COOK COUNTY
N.B. MAINLINE RECONSTRUCTION
RETROFIT REPAIRS - STRUCTURE 016-1111
FATIGUE RETROFIT REPAIR TYPES I-1 & I-2
Scale : NONE Drawn By: D.C.
Date : AUG. 1988 Checked By: J.J.S
ENVIRODYNE ENGINEERS INC.
Chicago, Illinois

FILE NAME: pw:\AECOM-NA-AWS1.aecomonline.local\AECOM_DS02_NA\Documents\01 Americas\Transportation\60269938 Circle\Phase_II\000_CAD\008_Structural\Sign Structures\62A76 Sign Structure\62A76-Span-55329-Exist Plans
12:39:15 PM

HBM ENGINEERING GROUP, LLC				
USER NAME = francisco.lopez	DESIGNED - JMI	REVISED -	STATE OF ILLINOIS DEPARTMENT OF TRANSPORTATION	EXISTING RECORD DRAWINGS STRUCTURE NO. 016-1111
	CHECKED - MAI, JJS	REVISED -		
PLOT SCALE = N.T.S	DRAWN - JMI	REVISED -		
PLOT DATE = 1/24/2020	CHECKED - MAI, JJS	REVISED -		SHEET NO.AS12-13 OF AS12-49SHEETS

F.A.I. RTE.	SECTION	COUNTY	TOTAL SHEETS	SHEET NO.
90/94/290	2015-019R	COOK	2155	1450
		CONTRACT NO. 62A76		
	ILLINOIS FED. AID PROJECT			

FOR INFORMATION ONLY

FEDERAL AID ROUTE NO.	SECTION	COUNTY	TOTAL SHEETS	SHEET NO.
90/94	*	COOK	51	50
STA.		TO STA.		
FED. RD. DIST. NO.	ILLINOIS	FED. AID PROJECT		

*SECTION 1985-077 BR

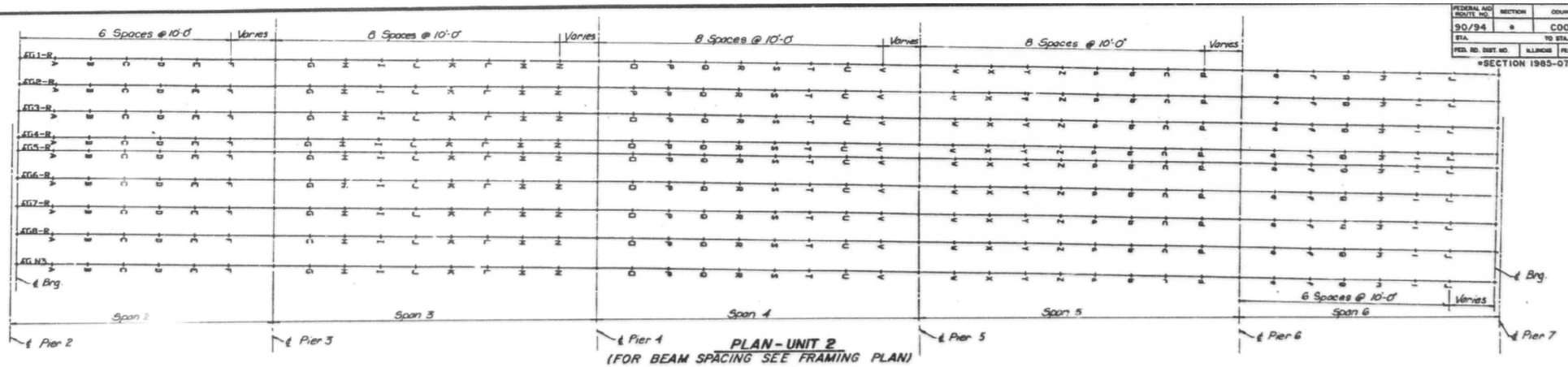

PLAN - UNIT 2
(FOR BEAM SPACING SEE FRAMING PLAN)

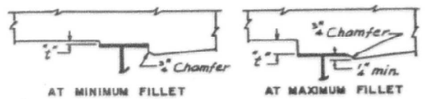

To determine "t": After all steel has been erected, elevations of the top flanges of the beams shall be taken at intervals shown below. These elevations subtracted from the "Theoretical Grade Elevations Adjusted for Dead Load Deflection" shown below, minus slab thickness, equals the fillet heights "t" above top flanges of beams.

FILLET HEIGHTS

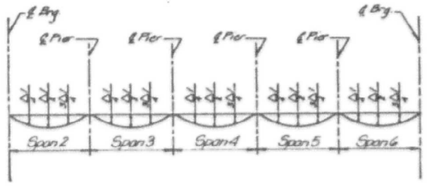

DEAD LOAD DEFLECTION DIAGRAM

(includes weight of concrete only)

Note : The above deflections are not to be used in the field if the Engineer is working from the grade elevations adjusted for dead load deflections as shown below.

DEAD LOAD DEFLECTION IN INCHES				
Beam	Δ/4	Δ/2	3Δ/4	
B1-R	-0.25	-0.30	-0.13	SPAN 2
B1-R	-0.14	-0.30	-0.14	SPAN 3
B1-R	-0.13	-0.27	-0.13	SPAN 4
B1-R	-0.14	-0.30	-0.14	SPAN 5
B1-R	-0.13	-0.30	-0.25	SPAN 6
B2-R	-0.30	-0.33	-0.13	TYPICAL FOR ALL BEAMS
B2-R	-0.17	-0.33	-0.17	
B2-R	-0.15	-0.32	-0.15	
B2-R	-0.17	-0.33	-0.17	
B2-R	-0.13	-0.33	-0.30	
B3-R	-0.30	-0.33	-0.13	
B3-R	-0.17	-0.33	-0.17	
B3-R	-0.15	-0.32	-0.15	
B3-R	-0.17	-0.33	-0.17	
B3-R	-0.13	-0.33	-0.30	
B4-R	-0.24	-0.28	-0.12	
B4-R	-0.17	-0.33	-0.17	
B4-R	-0.12	-0.26	-0.12	
B4-R	-0.13	-0.28	-0.13	
B4-R	-0.12	-0.28	-0.24	
B5-R	-0.26	-0.30	-0.12	
B5-R	-0.14	-0.30	-0.14	
B5-R	-0.13	-0.27	-0.13	
B5-R	-0.14	-0.30	-0.14	
B5-R	-0.12	-0.30	-0.24	
B6-R	-0.32	-0.36	-0.15	
B6-R	-0.19	-0.40	-0.21	
B6-R	-0.18	-0.37	-0.18	
B6-R	-0.21	-0.40	-0.19	
B6-R	-0.15	-0.36	-0.32	
B7-R	-0.32	-0.36	-0.15	
B7-R	-0.19	-0.40	-0.21	
B7-R	-0.18	-0.37	-0.18	
B7-R	-0.21	-0.40	-0.19	
B7-R	-0.15	-0.36	-0.32	
B8-R	-0.33	-0.37	-0.16	
B8-R	-0.20	-0.42	-0.22	
B8-R	-0.19	-0.38	-0.19	
B8-R	-0.22	-0.42	-0.20	
B8-R	-0.16	-0.37	-0.33	
BW-3	-0.36	-0.41	-0.18	
BW-3	-0.26	-0.48	-0.26	
BW-3	-0.24	-0.46	-0.24	
BW-3	-0.34	-0.48	-0.34	
BW-3	-0.18	-0.41	-0.34	

BEAM: B1-R

LOCATION	THEOR. GRADE ELEVATION	THEOR. GRADE ELEVATION ADJUSTED FOR DEAD LOAD DEFLECT.
PIER# 2		
A	48.362	48.362
B	48.482	48.475
C	48.541	48.553
D	48.801	48.606
E	48.761	48.783
F	48.861	48.878
PIER# 3	48.981	48.967
G	47.985	47.985
H	47.185	47.187
I	47.295	47.295
J	47.385	47.394
K	47.484	47.498
L	47.584	47.598
M	47.684	47.693
N	47.784	47.794
PIER# 4	47.884	47.885
O	47.998	47.998
P	48.098	48.091
Q	48.198	48.189
R	48.299	48.287
S	48.398	48.412
T	48.498	48.512
U	48.598	48.587
V	48.698	48.699
PIER# 5	48.798	48.782
W	48.897	48.897
X	48.997	48.998
Y	49.097	49.195
Z	49.196	49.214
a	49.296	49.329
b	49.396	49.428
c	49.496	49.515
d	49.595	49.597
PIER# 6	49.695	49.697
e	49.893	49.893
f	49.994	49.990
g	50.095	50.018
h	50.195	50.127
i	50.295	50.231
j	50.397	50.339
PIER# 7	50.498	50.424
	50.532	50.532

BEAM: B2-R

LOCATION	THEOR. GRADE ELEVATION	THEOR. GRADE ELEVATION ADJUSTED FOR DEAD LOAD DEFLECT.
PIER# 2		
A	48.553	48.553
B	48.653	48.669
C	48.752	48.778
D	48.852	48.881
E	48.952	48.977
F	47.952	47.988
PIER# 3	47.152	47.157
G	47.278	47.278
H	47.378	47.377
I	47.478	47.487
J	47.578	47.598
K	47.678	47.704
L	47.778	47.804
M	47.878	47.897
N	47.975	47.995
PIER# 4	48.075	48.075
O	48.182	48.182
P	48.282	48.283
Q	48.382	48.392
R	48.482	48.582
S	48.582	48.690
T	48.681	48.797
U	48.781	48.891
V	48.881	48.982
PIER# 5	48.981	48.982
W	49.079	49.080
X	49.180	49.190
Y	49.280	49.299
Z	49.380	49.418
a	49.488	49.518
b	49.588	49.618
c	49.688	49.719
d	49.788	49.820
PIER# 6	49.887	49.909
e	49.987	49.987
f	50.088	50.101
g	50.196	50.211
h	50.299	50.322
i	50.399	50.428
j	50.499	50.527
PIER# 7	50.599	50.619
	50.721	50.721

BEAM: B3-R

LOCATION	THEOR. GRADE ELEVATION	THEOR. GRADE ELEVATION ADJUSTED FOR DEAD LOAD DEFLECT.
PIER# 2		
A	48.809	48.899
B	48.709	48.815
C	48.899	48.825
D	47.998	47.123
E	47.198	47.214
F	47.298	47.293
PIER# 3	47.423	47.423
G	47.522	47.523
H	47.622	47.633
I	47.722	47.744
J	47.822	47.853
K	47.922	47.958
L	48.022	48.043
M	48.122	48.132
N	48.222	48.222
PIER# 4	48.328	48.328
O	48.428	48.429
P	48.528	48.538
Q	48.628	48.648
R	48.728	48.754
S	48.828	48.854
T	48.928	48.948
U	49.028	49.038
V	49.128	49.129
PIER# 5	49.235	49.235
W	49.335	49.337
X	49.435	49.448
Y	49.534	49.558
Z	49.634	49.662
a	49.734	49.763
b	49.834	49.857
c	49.934	49.948
d	50.034	50.030
PIER# 6	50.146	50.145
e	50.246	50.249
f	50.348	50.358
g	50.448	50.458
h	50.547	50.578
i	50.647	50.675
j	50.747	50.700
PIER# 7	50.867	50.867

Work this sheet with sheet no. C 51

SHEET C50 OF C51

REVISIONS	
Name	Date

STATE OF ILLINOIS
DEPARTMENT OF TRANSPORTATION
F.A.I. ROUTE 90/94 (DAN RYAN EXPRESSWAY)
SECTION 1985 - 077BR - COOK COUNTY
N.B. MAINLINE RECONSTRUCTION
STRUCTURE ONS - 1111
TOP OF SLAB ELEVATION - UNIT 2
Scale : NONE — Drawn By: CAD
Date : AUG. , 1988 — Checked By: MEM
ENVIRODYNE ENGINEERS INC.
Chicago, Illinois

FILE NAME: pw:\AECOM-NA-AWS1.aecomonline.local\AECOM_DS02_NA\Documents\01 Americas\Transportation\60269938 Circle\Phase_II\000_CAD\008_Structural\Sign Structures\62A76 Sign Structure\62A76-Span-55329-Exist Plans
12:39:20 PM

HBM ENGINEERING GROUP, LLC	USER NAME = francisco.lopez	DESIGNED - JMI	REVISED -	STATE OF ILLINOIS DEPARTMENT OF TRANSPORTATION	EXISTING RECORD DRAWINGS STRUCTURE NO. 016-1111
		CHECKED - MAI, JJS	REVISED -		
	PLOT SCALE = N.T.S	DRAWN - JMI	REVISED -		
	PLOT DATE = 1/24/2020	CHECKED - MAI, JJS	REVISED -		SHEET NO.AS12-14 OF AS12-49SHEETS

F.A.I. RTE.	SECTION	COUNTY	TOTAL SHEETS	SHEET NO.
90/94/290	2015-019R	COOK	2155	1451
		CONTRACT NO. 62A76		
	ILLINOIS	FED. AID PROJECT		

FOR INFORMATION ONLY

FEDERAL AID ROUTE NO.	SECTION	COUNTY	TOTAL SHEETS	SHEET NO.
90/94	*	COOK	51	31
STA.	TO STA.			
FED. RD. DIST. NO.	ILLINOIS	FED. AID PROJECT		

*SECTION 1985-077 BR

BEAM: B4-R

LOCATION	THEOR. GRADE ELEVATION	THEOR. GRADE ELEVATION ADJUSTED DEAD LOAD DEFLECT.
PIER# 2	46.822	46.822
A	46.822	46.935
B	47.823	47.843
C	47.123	47.146
D	47.222	47.243
E	47.322	47.338
F	47.422	47.427
PIER# 3	47.546	47.546
G	47.646	47.648
H	47.746	47.755
I	47.846	47.864
J	47.946	47.969
K	48.045	48.068
L	48.145	48.162
M	48.245	48.254
N	48.345	48.348
PIER# 4	48.452	48.452
O	48.551	48.552
P	48.651	48.659
Q	48.751	48.767
R	48.851	48.872
S	48.951	48.972
T	49.051	49.067
U	49.151	49.159
V	49.251	49.252
PIER# 5	49.358	49.358
W	49.458	49.459
X	49.556	49.566
Y	49.658	49.675
Z	49.758	49.788
a	49.858	49.881
b	49.957	49.975
c	50.057	50.067
d	50.157	50.159
PIER# 6	50.271	50.271
e	50.371	50.375
f	50.471	50.483
g	50.572	50.592
h	50.672	50.698
i	50.772	50.794
j	50.872	50.887
PIER# 7	50.998	50.998

BEAM: B5-R

LOCATION	THEOR. GRADE ELEVATION	THEOR. GRADE ELEVATION ADJUSTED DEAD LOAD DEFLECT.
PIER# 2	46.796	46.796
A	46.896	46.899
B	46.975	46.998
C	47.075	47.103
D	47.175	47.206
E	47.275	47.299
F	47.375	47.379
PIER# 3	47.499	47.499
G	47.599	47.596
H	47.699	47.704
I	47.799	47.812
J	47.899	47.917
K	47.999	48.017
L	48.099	48.112
M	48.199	48.201
N	48.299	48.299
PIER# 4	48.406	48.406
O	48.506	48.507
P	48.606	48.615
Q	48.706	48.723
R	48.806	48.828
S	48.906	48.928
T	49.005	49.022
U	49.105	49.114
V	49.205	49.207
PIER# 5	49.312	49.312
W	49.412	49.412
X	49.511	49.529
Y	49.612	49.638
Z	49.712	49.736
a	49.812	49.837
b	49.912	49.931
c	50.012	50.022
d	50.112	50.113
PIER# 6	50.227	50.227
e	50.326	50.328
f	50.426	50.436
g	50.526	50.546
h	50.625	50.650
i	50.725	50.749
j	50.825	50.841
PIER# 7	50.941	50.941

BEAM: B6-R

LOCATION	THEOR. GRADE ELEVATION	THEOR. GRADE ELEVATION ADJUSTED DEAD LOAD DEFLECT.
PIER# 2	46.795	46.795
A	46.796	46.782
B	46.830	46.868
C	46.929	46.964
D	47.031	47.063
E	47.134	47.154
F	47.237	47.244
PIER# 3	47.365	47.365
G	47.465	47.482
H	47.566	47.571
I	47.666	47.699
J	47.767	47.788
K	47.867	47.906
L	47.968	47.963
M	48.068	48.074
N	48.169	48.187
PIER# 4	48.276	48.276
O	48.376	48.376
P	48.476	48.498
Q	48.576	48.599
R	48.676	48.706
S	48.777	48.806
T	48.876	48.908
U	48.976	48.998
V	49.075	49.078
PIER# 5	49.182	49.182
W	49.282	49.285
X	49.382	49.396
Y	49.482	49.507
Z	49.582	49.614
a	49.681	49.713
b	49.781	49.806
c	49.881	49.895
d	49.981	49.984
PIER# 6	50.094	50.094
e	50.194	50.196
f	50.294	50.309
g	50.394	50.429
h	50.493	50.525
i	50.593	50.623
j	50.693	50.713
PIER# 7	50.811	50.811

BEAM: B7-R

LOCATION	THEOR. GRADE ELEVATION	THEOR. GRADE ELEVATION ADJUSTED DEAD LOAD DEFLECT.
PIER# 2	46.813	46.813
A	46.847	46.863
B	46.882	46.712
C	46.738	46.773
D	46.843	46.875
E	46.948	46.966
F	47.054	47.061
PIER# 3	47.185	47.185
G	47.286	47.283
H	47.388	47.393
I	47.489	47.503
J	47.590	47.611
K	47.691	47.712
L	47.792	47.087
M	47.894	47.099
N	47.995	47.993
PIER# 4	48.103	48.103
O	48.203	48.295
P	48.303	48.315
Q	48.403	48.428
R	48.503	48.533
S	48.603	48.633
T	48.703	48.727
U	48.803	48.816
V	48.903	48.906
PIER# 5	49.009	49.009
W	49.109	49.112
X	49.209	49.233
Y	49.308	49.334
Z	49.408	49.448
a	49.508	49.548
b	49.608	49.633
c	49.708	49.722
d	49.808	49.811
PIER# 6	49.919	49.919
e	50.019	50.023
f	50.119	50.134
g	50.218	50.244
h	50.318	50.358
i	50.418	50.448
j	50.518	50.538
PIER# 7	50.638	50.638

BEAM: B8-R

LOCATION	THEOR. GRADE ELEVATION	THEOR. GRADE ELEVATION ADJUSTED DEAD LOAD DEFLECT.
PIER# 2	46.522	46.522
A	46.527	46.541
B	46.533	46.558
C	46.547	46.578
D	46.655	46.683
E	46.763	46.781
F	46.871	46.877
PIER# 3	47.000	47.000
G	47.100	47.105
H	47.218	47.215
I	47.311	47.326
J	47.413	47.435
K	47.515	47.537
L	47.617	47.632
M	47.718	47.723
N	47.820	47.817
PIER# 4	47.929	47.929
O	48.029	48.032
P	48.129	48.142
Q	48.229	48.253
R	48.329	48.360
S	48.430	48.461
T	48.530	48.555
U	48.630	48.646
V	48.730	48.734
PIER# 5	48.835	48.835
W	48.935	48.938
X	48.935	48.958
Y	49.134	49.181
Z	49.234	49.282
a	49.334	49.388
b	49.433	49.488
c	49.533	49.547
d	49.633	49.636
PIER# 6	49.743	49.743
e	49.843	49.848
f	49.943	49.959
g	50.042	50.068
h	50.142	50.174
i	50.242	50.273
j	50.342	50.383
PIER# 7	50.464	50.464

BEAM: B8-3

LOCATION	THEOR. GRADE ELEVATION	THEOR. GRADE ELEVATION ADJUSTED DEAD LOAD DEFLECT.
PIER# 2	46.434	46.434
A	46.480	46.425
B	46.384	46.412
C	46.383	46.415
D	46.491	46.519
E	46.600	46.618
F	46.713	46.719
PIER# 3	46.853	46.853
G	46.947	46.952
H	47.042	47.068
I	47.136	47.187
J	47.231	47.278
K	47.325	47.364
L	47.420	47.452
M	47.514	47.533
N	47.609	47.615
PIER# 4	47.718	47.718
O	47.818	47.814
P	47.911	47.928
Q	48.011	48.048
R	48.111	48.148
S	48.211	48.248
T	48.311	48.341
U	48.412	48.429
V	48.512	48.517
PIER# 5	48.617	48.617
W	48.718	48.721
X	48.818	48.824
Y	48.918	48.945
Z	49.015	49.054
a	49.116	49.153
b	49.214	49.246
c	49.313	49.332
d	49.422	49.419
PIER# 6	49.522	49.522
e	49.622	49.627
f	49.722	49.739
g	49.821	49.858
h	49.921	49.957
i	50.021	50.055
j	50.121	50.144
PIER# 7	50.243	50.243

Read this sheet with sheet no. C 50

SHEET C 31 OF C 51

REVISIONS	
Name	Date

STATE OF ILLINOIS
DEPARTMENT OF TRANSPORTATION
F.A.I. ROUTE 90/94 (DAN RYAN EXPRESSWAY)
SECTION 1985 - 077BR - COOK COUNTY
N.B. MAINLINE RECONSTRUCTION
STRUCTURE ONS - 1111
TOP OF SLAB ELEVATION - UNIT 2
Scale : NONE — Drawn By: CAD
Date : AUG. , 1988 — Checked By: MEM
ENVIRODYNE ENGINEERS INC.
Chicago, Illinois

HBM ENGINEERING GROUP, LLC

USER NAME = francisco.lopez	DESIGNED - JMI	REVISED -	STATE OF ILLINOIS DEPARTMENT OF TRANSPORTATION	EXISTING RECORD DRAWINGS STRUCTURE NO. 016-1111	
	CHECKED - MAI, JJS	REVISED -			
PLOT SCALE = N.T.S	DRAWN - JMI	REVISED -			
PLOT DATE = 1/24/2020	CHECKED - MAI, JJS	REVISED -		SHEET NO.AS12-15 OF AS12-49SHEETS	

F.A.I. RTE.	SECTION	COUNTY	TOTAL SHEETS	SHEET NO.
90/94/290	2015-019R	COOK	2155	1452
		CONTRACT NO. 62A76		
	ILLINOIS	FED. AID PROJECT		

FILE NAME: pw:\AECOM-NA-AWS1.aecomonline.local\AECOM_DS02_NA\Documents\01 Americas\Transportation\60269938 Circle\Phase_II\000_CAD\008_Structural\Sign Structures\62A76 Sign Structure\62A76-Span-55329-Exist Plans
12:39:24 PM

FOR INFORMATION ONLY

FEDERAL AID ROUTE NO.	SECTION	COUNTY	TOTAL SHEETS	SHEET NO.
90/94	*	COOK	51	36
STA.		TO STA.		
FED. RD. DIST. NO.	ILLINOIS	FED. AID PROJECT		

* 1985-077 BR

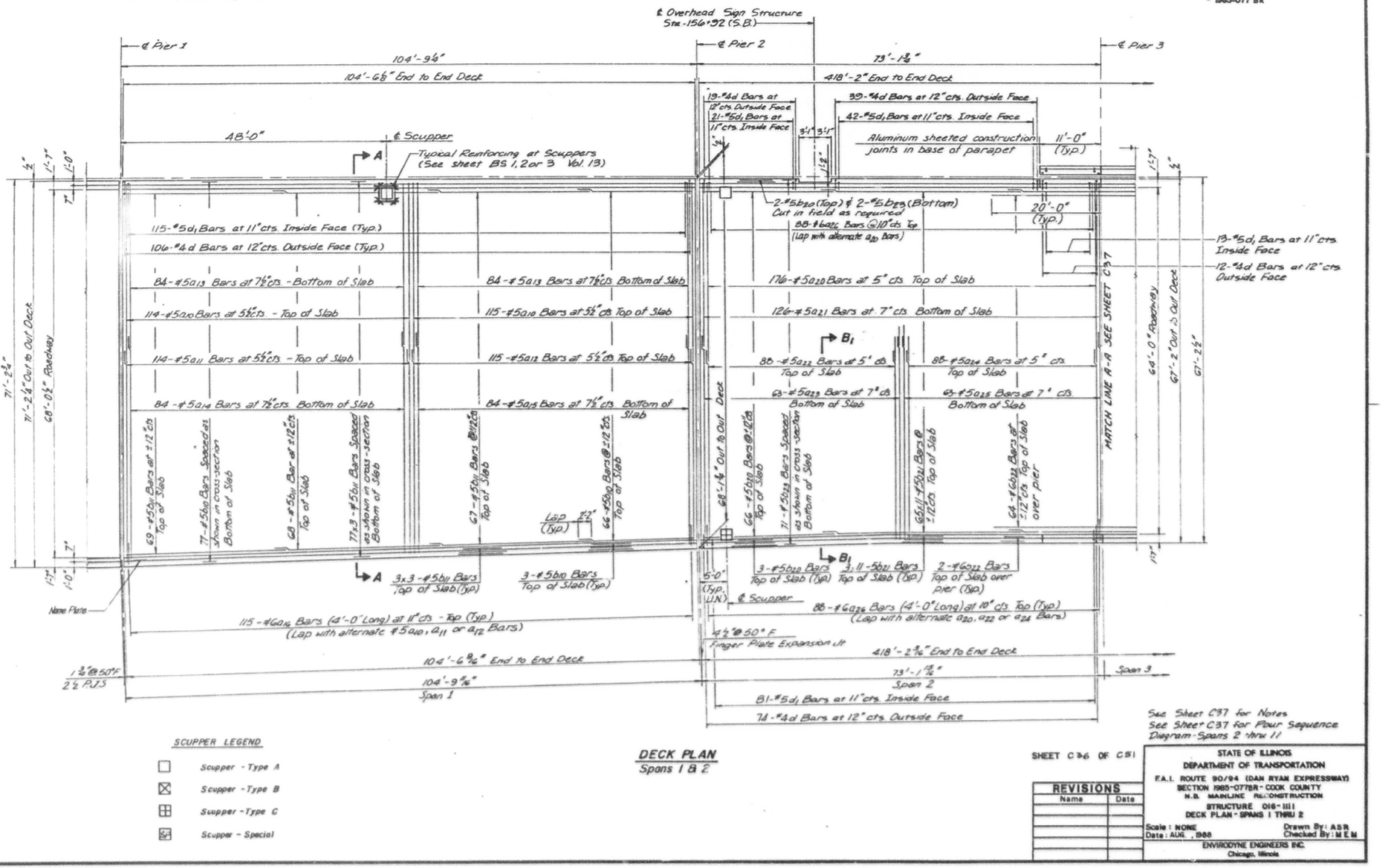

SCUPPER LEGEND

- Scupper - Type A
- Scupper - Type B
- Scupper - Type C
- Scupper - Special

DECK PLAN
Spans 1 & 2

See Sheet C37 for Notes
See Sheet C37 for Pour Sequence Diagram - Spans 2 thru 11

SHEET C36 OF C51

REVISIONS	
Name	Date

STATE OF ILLINOIS
DEPARTMENT OF TRANSPORTATION
F.A.I. ROUTE 90/94 (DAN RYAN EXPRESSWAY)
SECTION 1985-077BR - COOK COUNTY
N.B. MAINLINE RECONSTRUCTION
STRUCTURE 016-1111
DECK PLAN - SPANS 1 THRU 2
Scale : NONE
Date : AUG. , 1988
Drawn By : A.S.R.
Checked By : M.E.M.
ENVIRODYNE ENGINEERS INC.
Chicago, Illinois

HBM ENGINEERING GROUP, LLC

USER NAME = francisco.lopez		DESIGNED - JMI		REVISED -
		CHECKED - MAI, JJS		REVISED -
PLOT SCALE = N.T.S		DRAWN - JMI		REVISED -
PLOT DATE = 1/24/2020		CHECKED - MAI, JJS		REVISED -

STATE OF ILLINOIS
DEPARTMENT OF TRANSPORTATION

EXISTING RECORD DRAWINGS
STRUCTURE NO. 016-1111
SHEET NO.AS12-16 OF AS12-49SHEETS

F.A.I. RTE.	SECTION	COUNTY	TOTAL SHEETS	SHEET NO.
90/94/290	2015-019R	COOK	2155	1453
		CONTRACT NO. 62A76		
	ILLINOIS	FED. AID PROJECT		

FILE NAME: pw:\\AECOM-NA-AWS1.aecomonline.local:AECOM_DS02_NA\Documents\01 Americas\Transportation\60269938 Circle\Phase_II\000_CAD\008_Structural\Sign Structures\62A76 Sign Structure\62A76-Span-SS329-Exist Plans
12:39:30 PM

FOR INFORMATION ONLY

FEDERAL AID ROUTE NO.	SECTION	COUNTY	TOTAL SHEETS	SHEET NO.
90/94	*	COOK	51	37
STA.		TO STA.		
FED. RD. DIST NO.	ILLINOIS	FED. AID PROJECT		

* 1985-077 BR

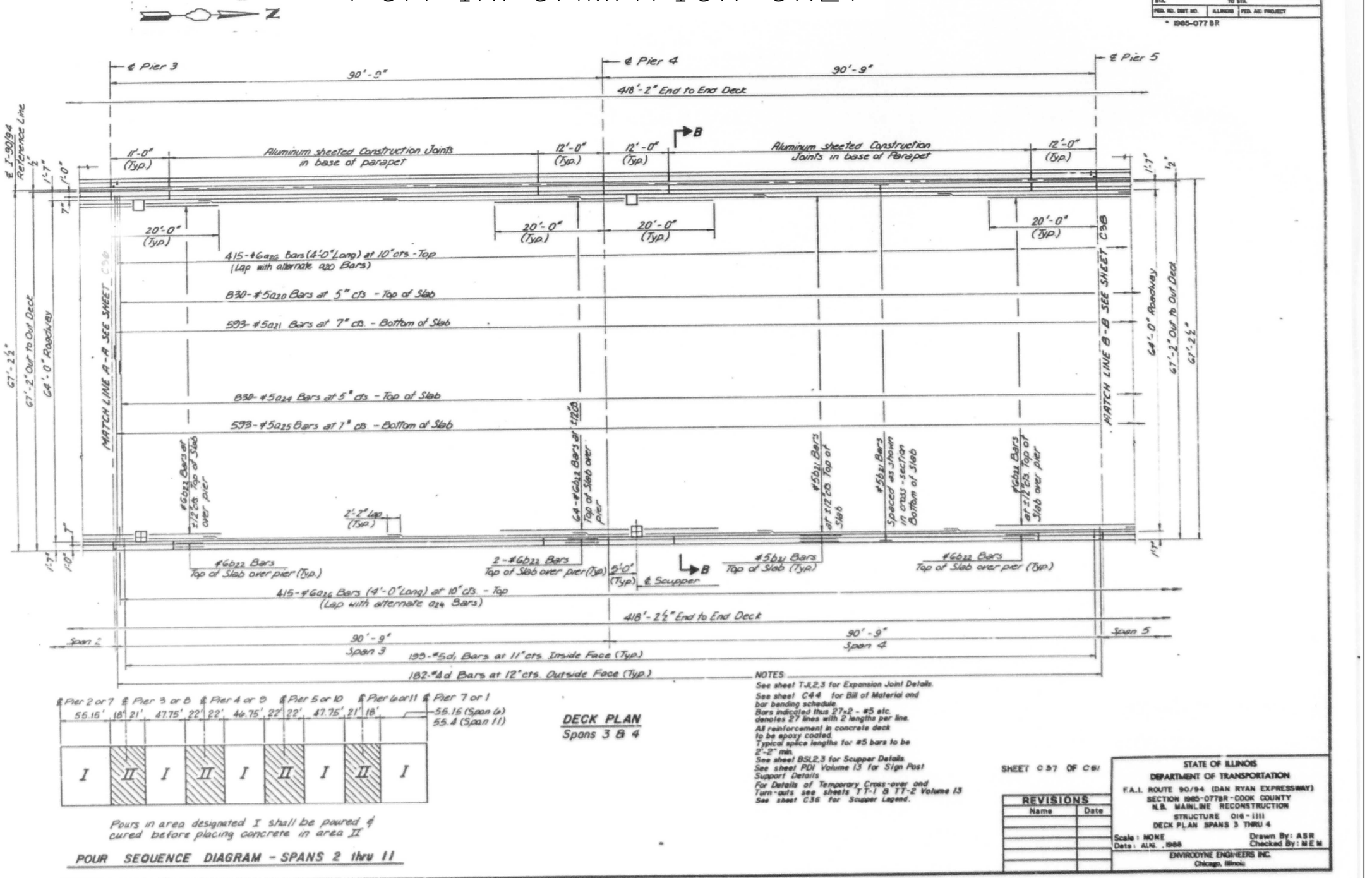

Pours in area designated I shall be poured & cured before placing concrete in area II

POUR SEQUENCE DIAGRAM - SPANS 2 thru 11

DECK PLAN
Spans 3 & 4

NOTES:
See sheet TJ1.2.3 for Expansion Joint Details.
See sheet C44 for Bill of Material and bar bending schedule.
Bars indicated thus 27-2 - #5 etc. denotes 27 lines with 2 lengths per line.
All reinforcement in concrete deck to be epoxy coated.
Typical splice lengths for #5 bars to be 2'-2" min.
See sheet BSL2.3 for Scupper Details.
See sheet PDI Volume 13 for Sign Post Support Details
For Details of Temporary Cross-over and Turn-outs see sheets TT-1 & TT-2 Volume 13
See sheet C36 for Scupper Legend.

SHEET C37 OF C61

REVISIONS	
Name	Date

STATE OF ILLINOIS
DEPARTMENT OF TRANSPORTATION
F.A.I. ROUTE 90/94 (DAN RYAN EXPRESSWAY)
SECTION 1985-077BR - COOK COUNTY
N.B. MAINLINE RECONSTRUCTION
STRUCTURE 016-1111
DECK PLAN SPANS 3 THRU 4
Scale: NONE — Drawn By: ASR
Date: AUG., 1988 — Checked By: M E M
ENVIRODYNE ENGINEERS INC.
Chicago, Illinois

HBM ENGINEERING GROUP, LLC

USER NAME = francisco.lopez	DESIGNED - JMI	REVISED -	STATE OF ILLINOIS DEPARTMENT OF TRANSPORTATION	EXISTING RECORD DRAWINGS STUCTURE NO. 016-1111	
	CHECKED - MAI, JJS	REVISED -			
PLOT SCALE = N.T.S	DRAWN - JMI	REVISED -			
PLOT DATE = 1/24/2020	CHECKED - MAI, JJS	REVISED -		SHEET NO.AS12-17 OF AS12-49SHEETS	

F.A.I. RTE.	SECTION	COUNTY	TOTAL SHEETS	SHEET NO.
90/94/290	2015-019R	COOK	2155	1454
		CONTRACT NO. 62A76		
	ILLINOIS	FED. AID PROJECT		

FILE NAME: pw:\\AECOM-NA-AWS1.aecomonline.local:AECOM_DS02_NAIDocuments\01 Americas\Transportation\60269938 Circle\Phase_II\000_CAD\008_Structural\Sign Structures\62A76 Sign Structure\62A76-Span-SS329-Exist Plans
12:39:35 PM

FOR INFORMATION ONLY

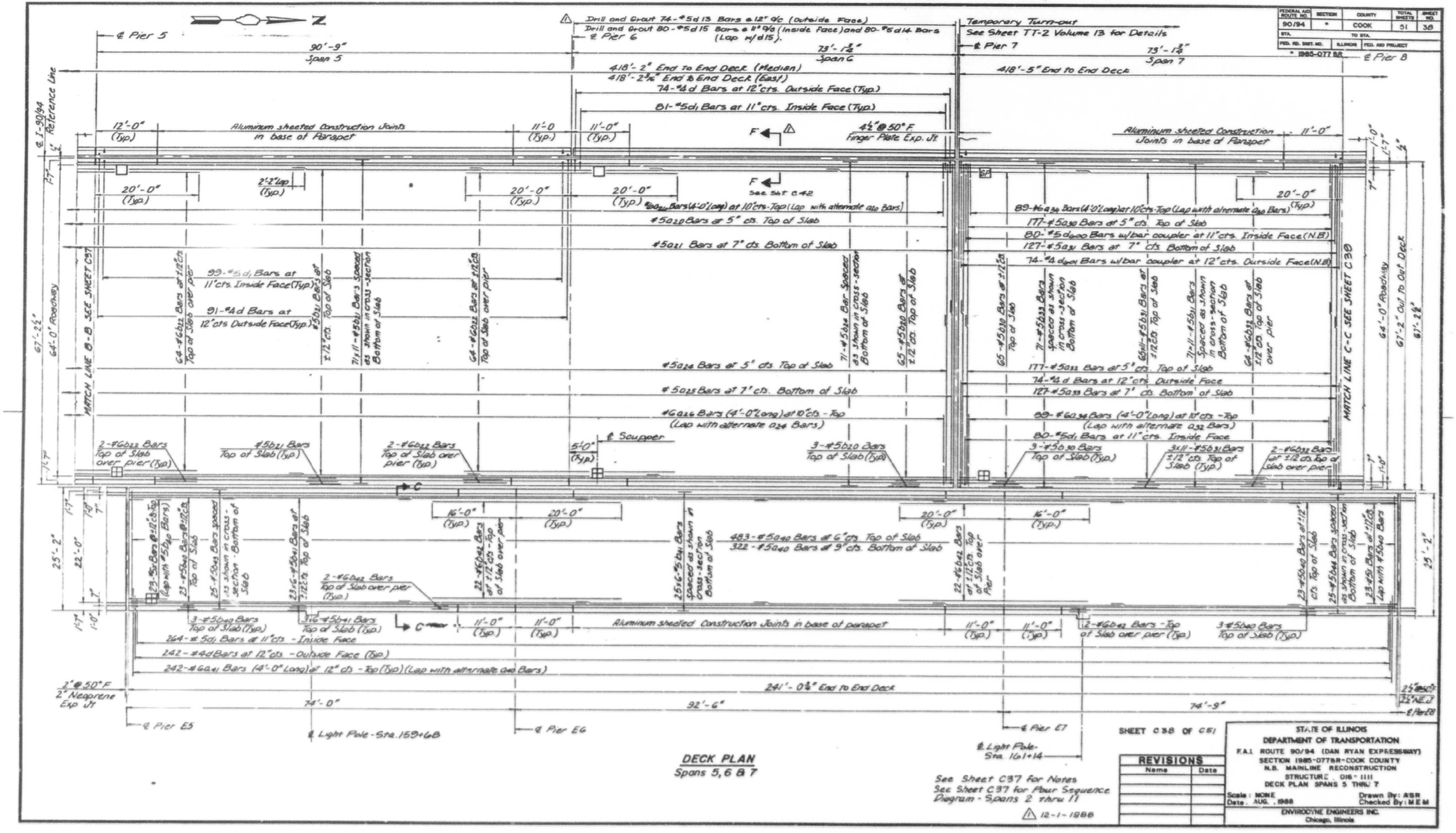

DECK PLAN
Spans 5, 6 & 7

FEDERAL AID ROUTE NO.	SECTION	COUNTY	TOTAL SHEETS	SHEET NO.
90/94	*	COOK	51	38
STA.		TO STA.		
FED. RD. DIST. NO.	ILLINOIS	FED. AID PROJECT		
	* 1985-077 BR			

SHEET C38 OF C51

REVISIONS	
Name	Date

STATE OF ILLINOIS
DEPARTMENT OF TRANSPORTATION
F.A.I. ROUTE 90/94 (DAN RYAN EXPRESSWAY)
SECTION 1985-077BR-COOK COUNTY
N.B. MAINLINE RECONSTRUCTION
STRUCTURE 016-1111
DECK PLAN SPANS 5 THRU 7
Scale: NONE
Date: AUG. 1988
Drawn By: ASR
Checked By: M E M
ENVIRODYNE ENGINEERS INC.
Chicago, Illinois

FILE NAME: pw:\\AECOM-NA-AWS1.aecomonline.local:AECOM_DS02_NA\Documents\01 Americas\Transportation\60269938 Circle\Phase_II\000_CAD\008_Structural\Sign Structures\62A76 Sign Structure\62A76-Span-55329-Exist Plans
12:39:40 PM

HBM ENGINEERING GROUP, LLC

USER NAME = francisco.lopez	DESIGNED - JMI	REVISED -
	CHECKED - MAI, JJS	REVISED -
PLOT SCALE = N.T.S	DRAWN - JMI	REVISED -
PLOT DATE = 1/24/2020	CHECKED - MAI, JJS	REVISED -

STATE OF ILLINOIS
DEPARTMENT OF TRANSPORTATION

EXISTING RECORD DRAWINGS
STRUCTURE NO. 016-1111
SHEET NO.AS12-18 OF AS12-49SHEETS

F.A.I. RTE.	SECTION	COUNTY	TOTAL SHEETS	SHEET NO.
90/94/290	2015-019R	COOK	2155	1455
		CONTRACT NO. 62A76		
	ILLINOIS	FED. AID PROJECT		

FOR INFORMATION ONLY

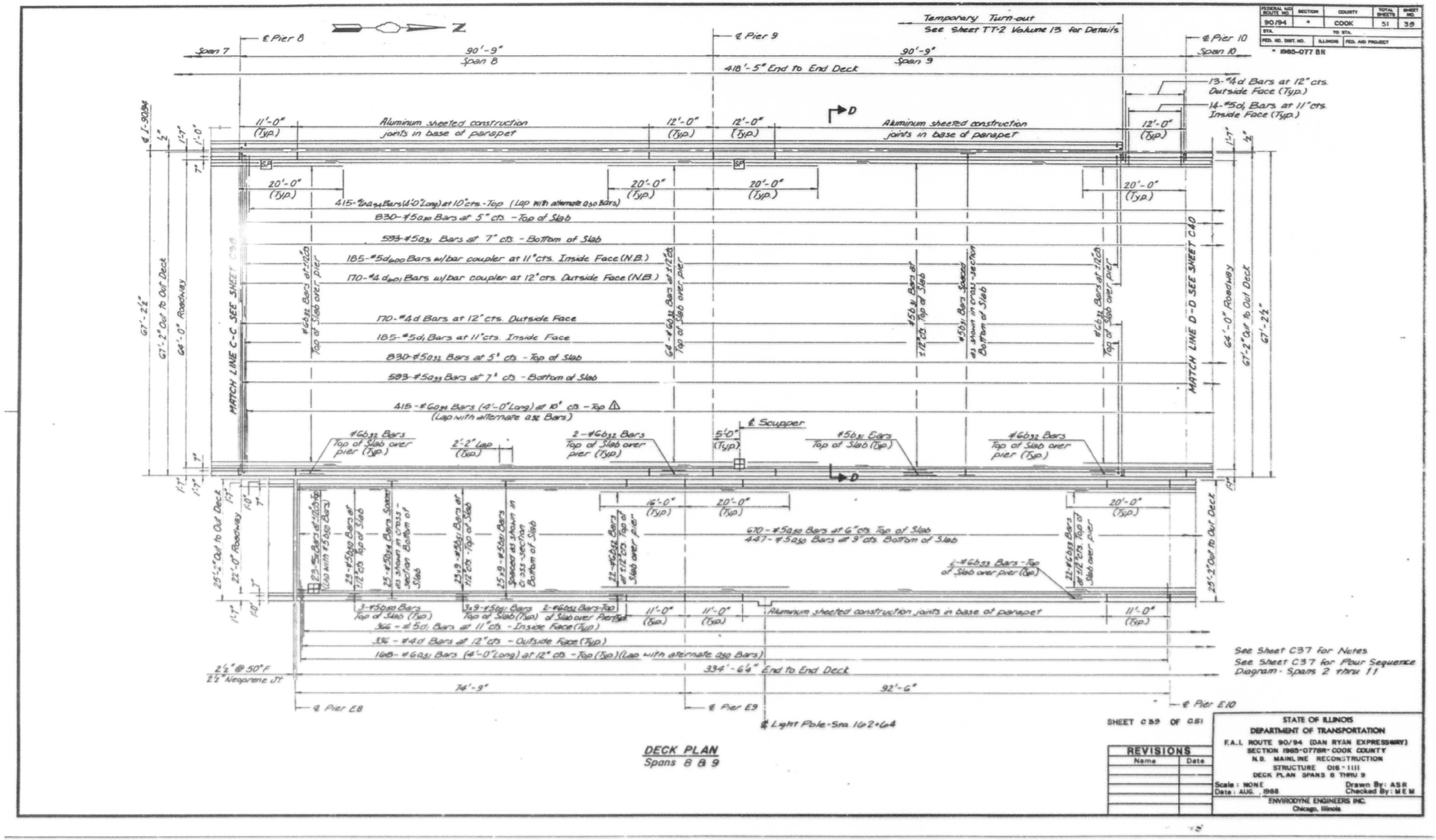

DECK PLAN
Spans 8 & 9

FEDERAL AID ROUTE NO.	SECTION	COUNTY	TOTAL SHEETS	SHEET NO.
90/94	*	COOK	51	39
STA.		TO STA.		
FED. RD. DIST. NO.	ILLINOIS	FED. AID PROJECT		

* 1965-077 BR

SHEET C39 OF C51

REVISIONS	
Name	Date

STATE OF ILLINOIS
DEPARTMENT OF TRANSPORTATION
F.A.I. ROUTE 90/94 (DAN RYAN EXPRESSWAY)
SECTION 1965-077BR- COOK COUNTY
N.B. MAINLINE RECONSTRUCTION
STRUCTURE 016-1111
DECK PLAN SPANS 8 THRU 9
Scale : NONE — Drawn By: ASR
Date : AUG. 1988 — Checked By: MEM
ENVIRODYNE ENGINEERS INC.
Chicago, Illinois

FILE NAME: pw:\\AECOM-NA-AWS1.aecomonline.local:AECOM_DS02_NAIDocuments\01 Americas\Transportation\60269938 Circle\Phase_II\000_CADD\008_Structural\Sign Structures\62A76 Sign Structure\62A76-Span-55329-Exist Plans
12:39:45 PM

HBM ENGINEERING GROUP, LLC

USER NAME = francisco.lopez	DESIGNED - JMI	REVISED -	STATE OF ILLINOIS DEPARTMENT OF TRANSPORTATION	EXISTING RECORD DRAWINGS STRUCTURE NO. 016-1111	
	CHECKED - MAI, JJS	REVISED -			
PLOT SCALE = N.T.S	DRAWN - JMI	REVISED -			
PLOT DATE = 1/24/2020	CHECKED - MAI, JJS	REVISED -		SHEET NO.AS12-19 OF AS12-49SHEETS	

F.A.I. RTE.	SECTION	COUNTY	TOTAL SHEETS	SHEET NO.
90/94/290	2015-019R	COOK	2155	1456
		CONTRACT NO. 62A76		
		ILLINOIS	FED. AID PROJECT	

FOR INFORMATION ONLY

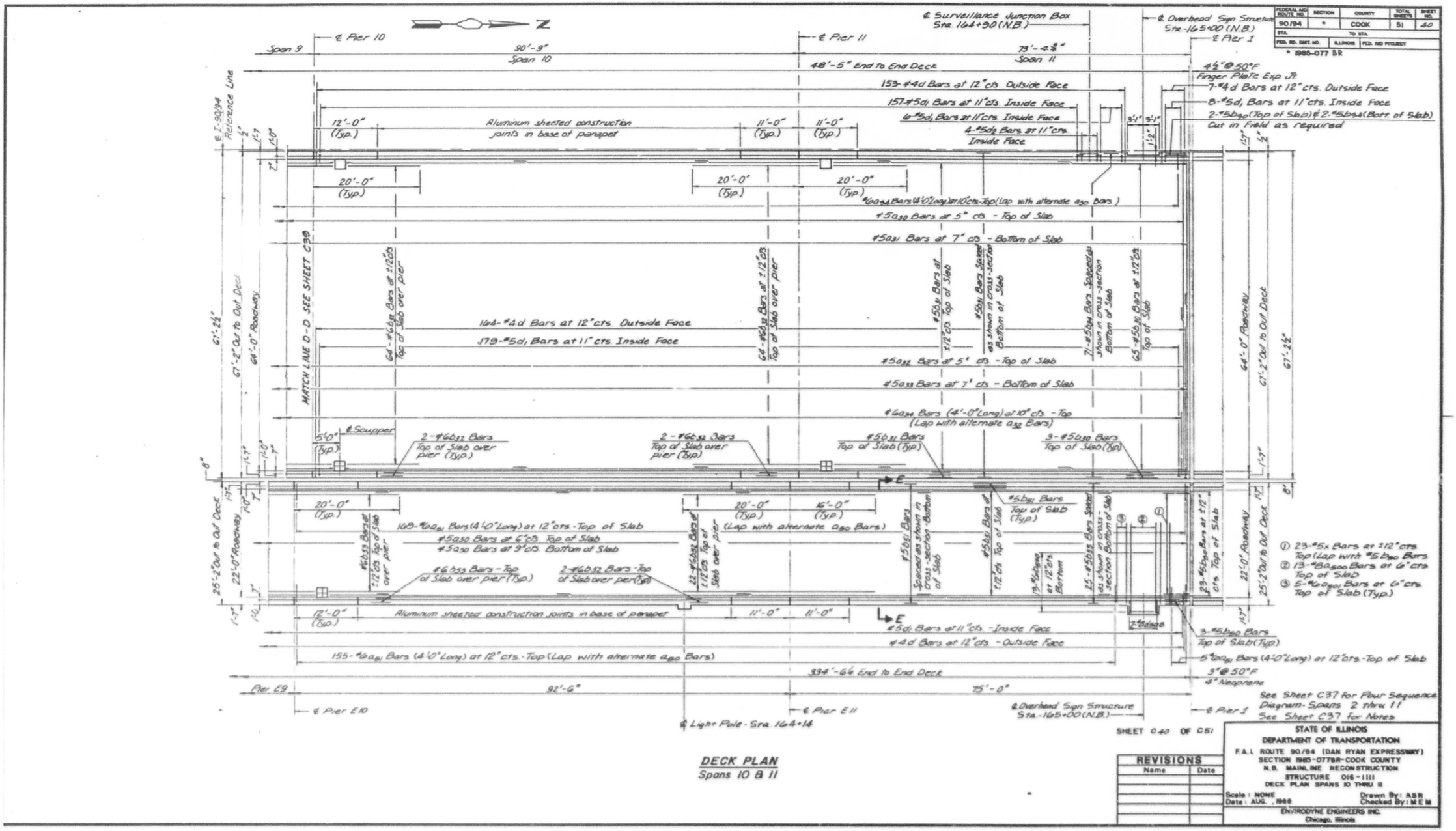

DECK PLAN
Spans 10 & 11

FEDERAL AID ROUTE NO.	SECTION	COUNTY	TOTAL SHEETS	SHEET NO.
90/94	*	COOK	51	40
STA.	TO STA.			
FED. RD. DIST. NO.	ILLINOIS	FED. AID PROJECT		

* 1985-077 BR

SHEET C40 OF C51

REVISIONS	
Name	Date

STATE OF ILLINOIS
DEPARTMENT OF TRANSPORTATION
F.A.I. ROUTE 90/94 (DAN RYAN EXPRESSWAY)
SECTION 1985-077BR-COOK COUNTY
N.B. MAINLINE RECONSTRUCTION
STRUCTURE 016-1111
DECK PLAN SPANS 10 THRU 11
Scale: NONE
Date: AUG., 1988
Drawn By: ASR
Checked By: M E M
ENVIRODYNE ENGINEERS INC.
Chicago, Illinois

FILE NAME: pw:\\AECOM-NA-AWS1.aecomonline.local\AECOM_DS02_NA\Documents\01 Americas\Transportation\60269938 Circle\Phase_II\000_CAD\008_Structural\Sign Structures\62A76 Sign Structure\62A76-Span-55329-Exist Plans
12:39:50 PM

HBM ENGINEERING GROUP, LLC

USER NAME = francisco.lopez	DESIGNED - JMI	REVISED -
	CHECKED - MAI, JJS	REVISED -
PLOT SCALE = N.T.S	DRAWN - JMI	REVISED -
PLOT DATE = 1/24/2020	CHECKED - MAI, JJS	REVISED -

STATE OF ILLINOIS
DEPARTMENT OF TRANSPORTATION

EXISTING RECORD DRAWINGS
STRUCTURE NO. 016-1111
SHEET NO.AS12-20 OF AS12-49SHEETS

F.A.I. RTE.	SECTION	COUNTY	TOTAL SHEETS	SHEET NO.
90/94/290	2015-019R	COOK	2155	1457
		CONTRACT NO. 62A76		
	ILLINOIS	FED. AID PROJECT		

FOR INFORMATION ONLY

FEDERAL AID ROUTE NO.	SECTION	COUNTY	TOTAL SHEETS	SHEET NO.
90/94	*	COOK	51	41
STA.		TO STA.		
FED. RD. DIST. NO.	ILLINOIS	FED. AID PROJECT		

*SECTION 1985-077BR

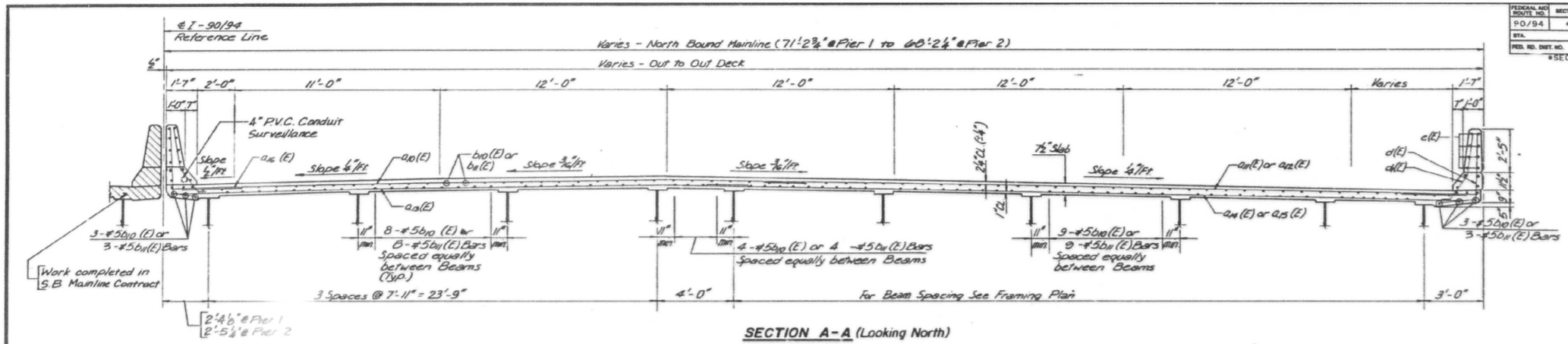

SECTION A-A (Looking North)

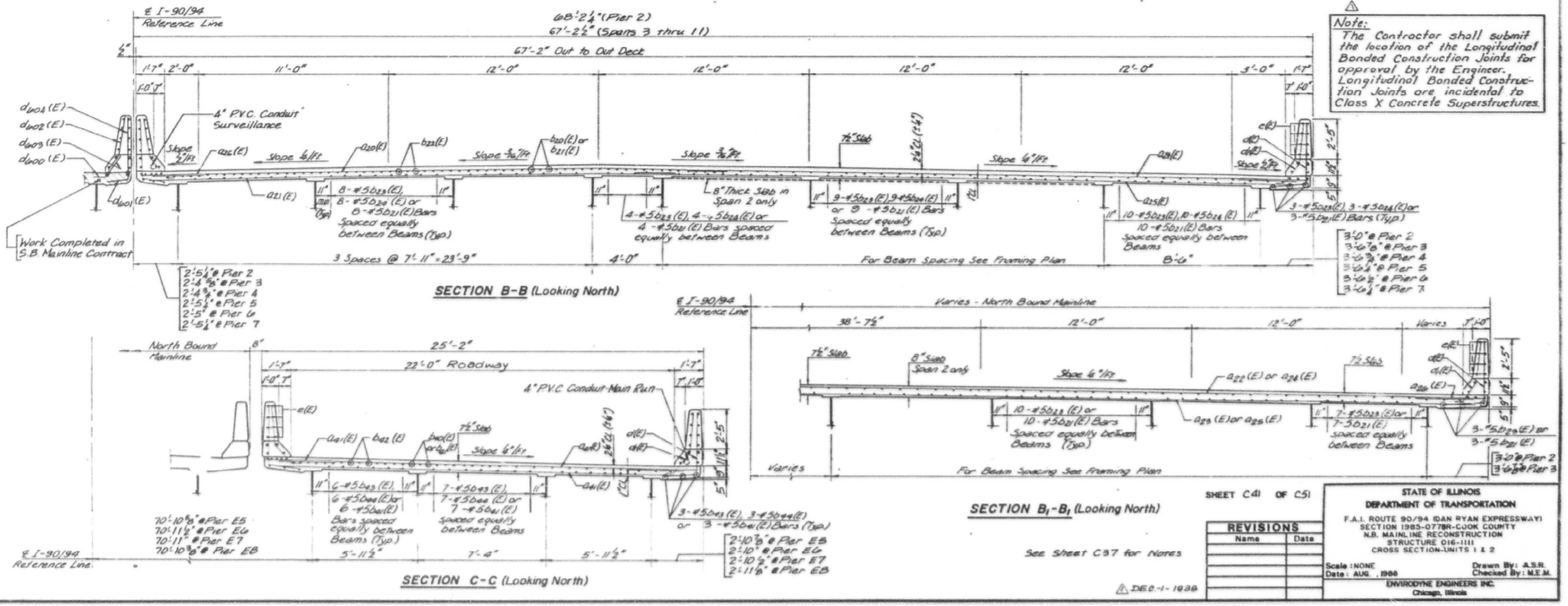

SECTION B-B (Looking North)

SECTION C-C (Looking North)

SECTION B_1-B_1 (Looking North)

Note:
The Contractor shall submit the location of the Longitudinal Bonded Construction Joints for approval by the Engineer. Longitudinal Bonded Construction Joints are incidental to Class X Concrete Superstructures.

See Sheet C37 for Notes

SHEET C41 OF C51

REVISIONS	
Name	Date

STATE OF ILLINOIS
DEPARTMENT OF TRANSPORTATION
F.A.I. ROUTE 90/94 (DAN RYAN EXPRESSWAY)
SECTION 1985-077BR-COOK COUNTY
N.B. MAINLINE RECONSTRUCTION
STRUCTURE 016-1111
CROSS SECTION-UNITS 1 & 2
Scale : NONE
Date : AUG. , 1988
Drawn By: A.S.R.
Checked By: M.E.M.
ENVIRODYNE ENGINEERS INC.
Chicago, Illinois

△ DEC.-1- 1988

FILE NAME: pw:\\AECOM-NA-AWS1.aecomonline.local:AECOM_DS02_NA\Documents\01 Americas\Transportation\60269938 Circle\Phase_II\000_CAD\008_Structural\Sign Structures\62A76 Sign Structure\62A76-Span-55329-Exist Plans

12:39:54 PM

HBM ENGINEERING GROUP, LLC	USER NAME = francisco.lopez	DESIGNED - JMI	REVISED -	STATE OF ILLINOIS DEPARTMENT OF TRANSPORTATION	EXISTING RECORD DRAWINGS STRUCTURE NO. 016-1111
		CHECKED - MAI, JJS	REVISED -		
	PLOT SCALE = N.T.S	DRAWN - JMI	REVISED -		
	PLOT DATE = 1/24/2020	CHECKED - MAI, JJS	REVISED -		SHEET NO.AS12-21 OF AS12-49SHEETS

F.A.I. RTE.	SECTION	COUNTY	TOTAL SHEETS	SHEET NO.
90/94/290	2015-019R	COOK	2155	1458
		CONTRACT NO. 62A76		
		ILLINOIS	FED. AID PROJECT	

FOR INFORMATION ONLY

FEDERAL AID ROUTE NO.	SECTION	COUNTY	TOTAL SHEETS	SHEET NO.
90/94	*	COOK	51	42
STA.		TO STA.		
FED. RD. DIST. NO.	ILLINOIS	FED. AID PROJECT		

*SECTION 1985-077BR

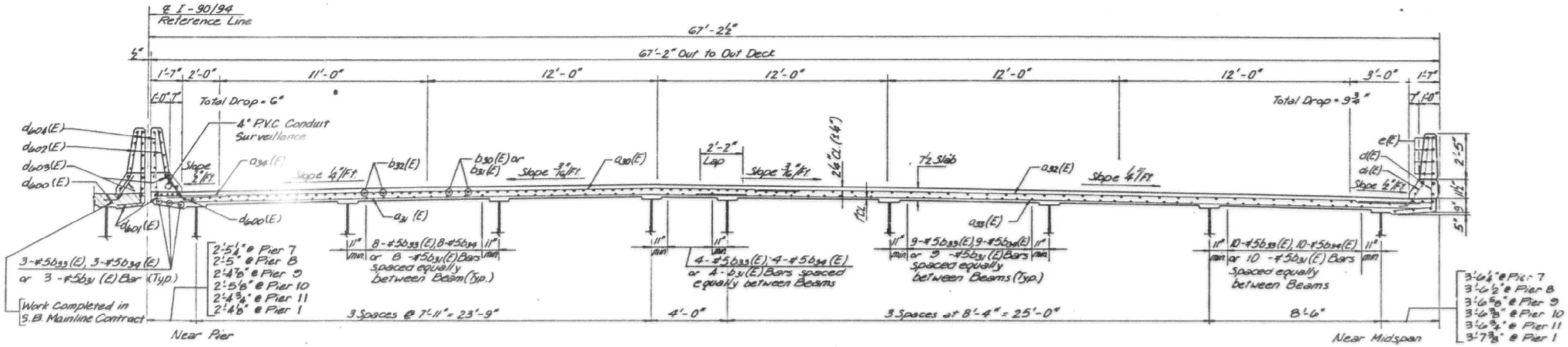

SECTION D-D (Looking North)

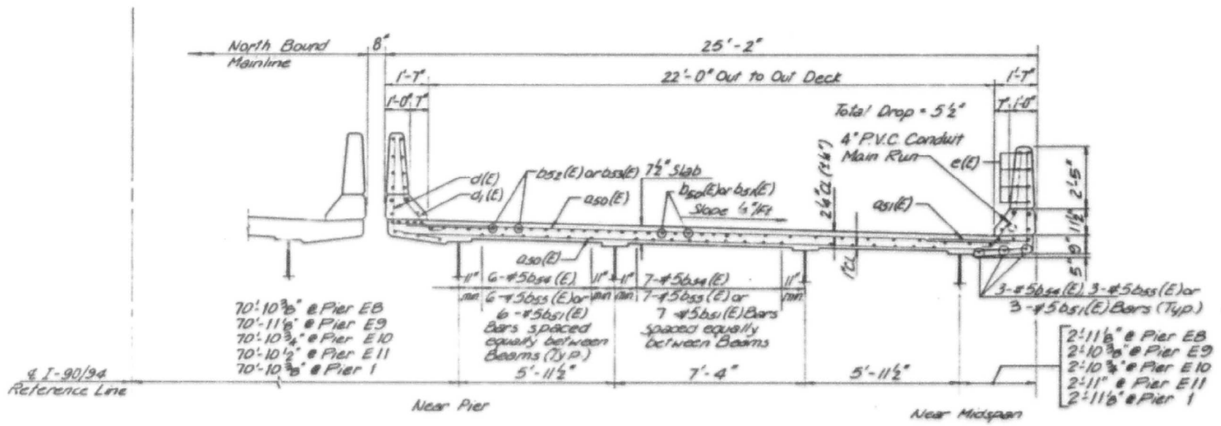

SECTION E-E (Looking North)

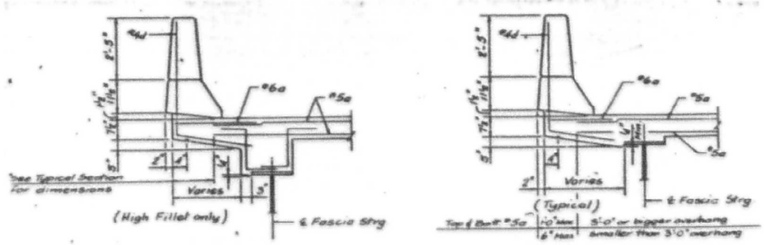

SLAB FASCIA DETAILS

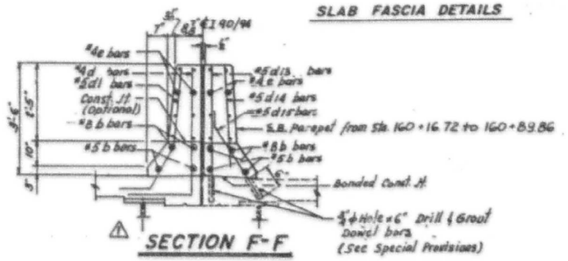

SECTION F-F

Note: ⚠
The Contractor shall submit the location of the Longitudinal Bonded Construction Joints for approval by the Engineer. Longitudinal Bonded Construction Joints are incidental to Class X Concrete Superstructures.

⚠ 12-1-1988

See Sheet C37 for Notes

SHEET C42 OF C51

REVISIONS	
Name	Date

STATE OF ILLINOIS
DEPARTMENT OF TRANSPORTATION
F.A.I. ROUTE 90/94 (DAN RYAN EXPRESSWAY)
SECTION 1985-077BR-COOK COUNTY
N.B. MAINLINE RECONSTRUCTION
STRUCTURE 016-1111
CROSS SECTION-UNIT 3

Scale : NONE — Drawn By: A.S.R.
Date : AUG. , 1988 — Checked By: M.E.M.

ENVIRODYNE ENGINEERS INC.
Chicago, Illinois

HBM ENGINEERING GROUP, LLC

USER NAME = francisco.lopez		DESIGNED - JMI		REVISED -	
		CHECKED - MAI, JJS		REVISED -	
PLOT SCALE = N.T.S		DRAWN - JMI		REVISED -	
PLOT DATE = 1/24/2020		CHECKED - MAI, JJS		REVISED -	

STATE OF ILLINOIS
DEPARTMENT OF TRANSPORTATION

EXISTING RECORD DRAWINGS
STRUCTURE NO. 016-1111
SHEET NO.AS12-22 OF AS12-49SHEETS

F.A.I. RTE.	SECTION	COUNTY	TOTAL SHEETS	SHEET NO.
90/94/290	2015-019R	COOK	2155	1459
		CONTRACT NO. 62A76		
	ILLINOIS	FED. AID PROJECT		

FILE NAME: pw:\AECOM-NA-AWS1.aecomonline.local:AECOM_DS02_NA\Documents\01 Americas\Transportation\60269938 Circle\Phase_II\000_CAD\008_Structural\Sign Structures\62A76 Sign Structure\62A76-Span-55329-Exist Plans
12:39:59 PM

FOR INFORMATION ONLY

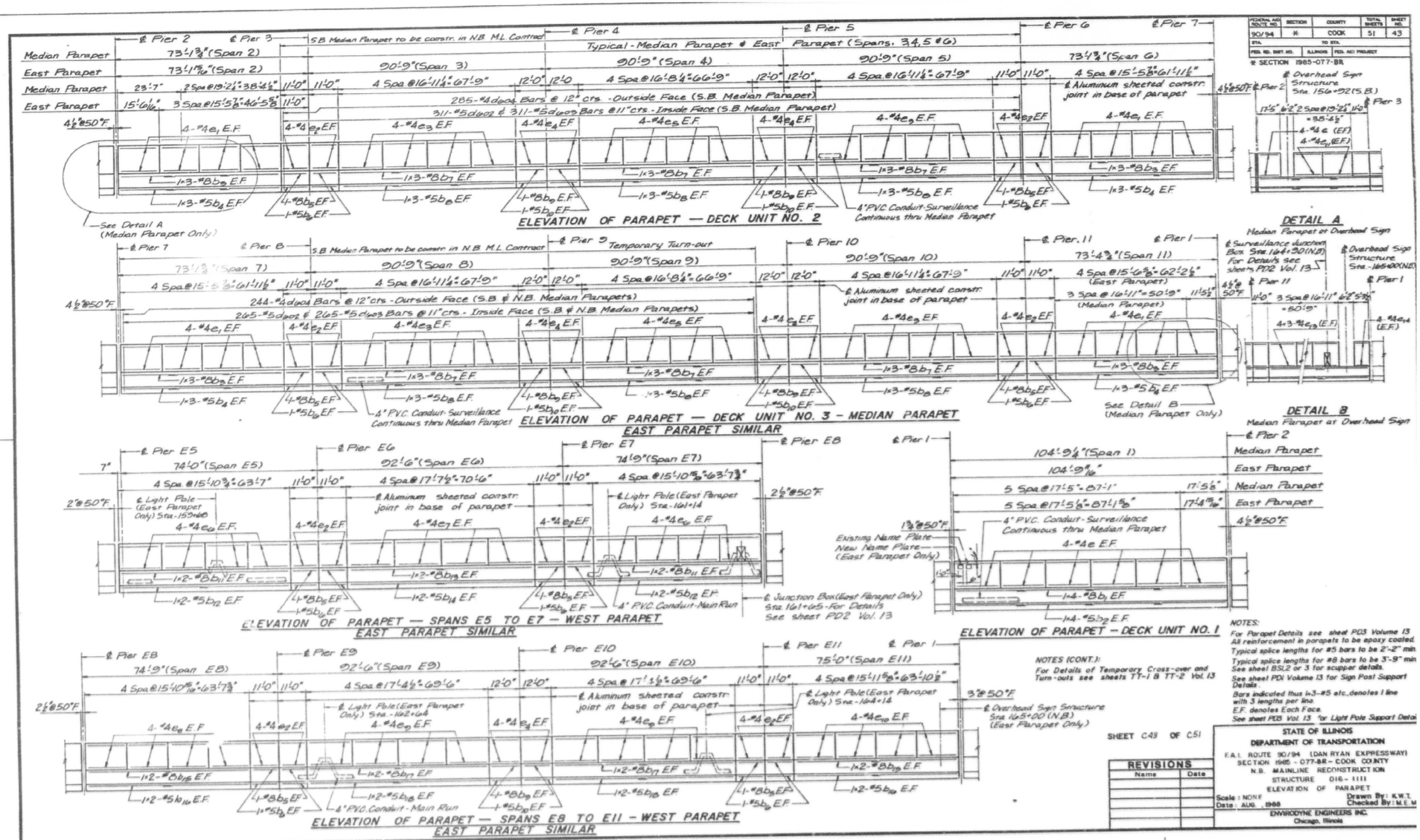

FEDERAL AID ROUTE NO.	SECTION	COUNTY	TOTAL SHEETS	SHEET NO.
90/94	*	COOK	51	43
STA.	TO STA.			
FED. RD. DIST. NO.	ILLINOIS	FED. AID PROJECT		

* SECTION 1985-077-BR

HBM ENGINEERING GROUP, LLC	USER NAME = francisco.lopez	DESIGNED - JMI	REVISED -	STATE OF ILLINOIS DEPARTMENT OF TRANSPORTATION
		CHECKED - MAI, JJS	REVISED -	
	PLOT SCALE = N.T.S	DRAWN - JMI	REVISED -	
	PLOT DATE = 1/24/2020	CHECKED - MAI, JJS	REVISED -	

EXISTING RECORD DRAWINGS
STRUCTURE NO. 016-1111
SHEET NO.AS12-23 OF AS12-49SHEETS

F.A.I. RTE.	SECTION	COUNTY	TOTAL SHEETS	SHEET NO.
90/94/290	2015-019R	COOK	2155	1460
			CONTRACT NO. 62A76	
		ILLINOIS	FED. AID PROJECT	

FILE NAME: pw:\\AECOM-NA-AWS1.aecomonline.local:AECOM_D502_NAIDocuments\01 Americas\Transportation\60269938 Circle\Phase_II\000_CAD\008_Structural\Sign Structures\62A76 Sign Structure\62A76-Span-S5329-Exist Plans

12:40:05 PM

FOR INFORMATION ONLY

FEDERAL AID ROUTE NO.	SECTION	COUNTY	TOTAL SHEETS	SHEET NO.
90/94	16	COOK	51	44
STA.		TO STA.		
FED. RD. DIST. NO.	ILLINOIS	FED. AID PROJECT		

16 1985-077 BR

REINFORCEMENT BAR SCHEDULE

STRUCTURE	MARK	NUMBER	SIZE	LENGTH	TYPE
SPAN 1	a10(E)	229	#5	36'-0"	
SPAN 1	a11(E)	114	#5	36'-9"	
SPAN 1	a12(E)	115	#5	35'-3"	
SPAN 1	a13(E)	168	#5	32'-9"	
SPAN 1	a14(E)	84	#5	40'-0"	
SPAN 1	a15(E)	84	#5	38'-6"	
SPAN 1	a16(E)	230	#6	4'-0"	
SPAN 1	b10(E)	149	#5	21'-0"	
SPAN 1	b11(E)	453	#5	30'-0"	
SPAN 1	d(E)	212	#4	5'-10"	
SPAN 1	d1(E)	230	#5	4'-7"	
SPAN 1	s1(E)	8	#5	2'-0"	
SPAN 1	s2(E)	6	#5	*5'-0"	
SPANS 2-6	a20(E)	1006	#5	33'-0"	
SPANS 2-6	a21(E)	719	#5	31'-6"	
SPANS 2-6	a22(E)	88	#5	37'-6"	
SPANS 2-6	a23(E)	63	#5	39'-0"	
SPANS 2-6	a24(E)	918	#5	36'-0"	
SPANS 2-6	a25(E)	656	#5	38'-0"	
SPANS 2-6	a26(E)	1006	#6	4'-0"	
SPANS 2-6	b20(E)	143	#5	24'-0"	
SPANS 2-6	b21(E)	1562	#5	36'-0"	
SPANS 2-6	b22(E)	272	#6	40'-0"	
SPANS 2-6	b23(E)	71	#5	18'-0"	
SPANS 2-6	b24(E)	71	#5	30'-0"	
SPANS 2-6	d(E)	838	#4	5'-10"	
SPANS 2-6	d1(E)	915	#5	4'-7"	
SPANS 2-6	d520(E)	7	#5	3'-6"	
SPANS 2-6	d521(E)	7	#4	3'-7"	
SPANS 2-6	s1(E)	80	#5	2'-0"	
SPANS 2-6	s2(E)	60	#5	5'-0"	
SPANS 7-11	a30(E)	1007	#5	33'-0"	
SPANS 7-11	a31(E)	720	#5	31'-6"	
SPANS 7-11	a32(E)	1007	#5	36'-0"	
SPANS 7-11	a33(E)	720	#5	38'-0"	
SPANS 7-11	a34(E)	1008	#6	4'-0"	
SPANS 7-11	b30(E)	142	#5	24'-0"	
SPANS 7-11	b31(E)	1562	#5	36'-0"	
SPANS 7-11	b32(E)	272	#6	40'-0"	
SPANS 7-11	b33(E)	71	#5	18'-0"	
SPANS 7-11	b34(E)	71	#5	30'-0"	
SPANS 7-11	d(E)	594	#4	5'-10"	
SPANS 7-11	d1(E)	643	#5	4'-7"	
SPANS 7-11	d520(E)	7	#5	3'-6"	
SPANS 7-11	d521(E)	7	#4	3'-7"	
SPANS 7-11	d2(E)	4	#5	2'-1"	
SPANS 7-11	d600(E)	265	#5	2'-0"	
SPANS 7-11	d601(E)	244	#4	2'-6"	
SPANS 7-11	s1(E)	72	#5	2'-0"	
SPANS 7-11	s2(E)	54	#5	5'-0"	
SPANS 7-11	u570(E)	9	#5	15'-4"	
ENTRANCE RAMP E	a40(E)	805	#6	24'-6"	
ENTRANCE RAMP E	a41(E)	484	#6	4'-0"	
ENTRANCE RAMP E	a50(E)	1117	#5	24'-6"	
ENTRANCE RAMP E	a51(E)	665	#6	4'-0"	
ENTRANCE RAMP E	a500(E)	13	#8	20'-0"	
ENTRANCE RAMP E	a501(E)	10	#6	18'-0"	
ENTRANCE RAMP E	b40(E)	58	#5	20'-0"	
ENTRANCE RAMP E	b41(E)	324	#5	36'-0"	

REINFORCEMENT BAR SCHEDULE

STRUCTURE	MARK	NUMBER	SIZE	LENGTH	TYPE
ENTRANCE RAMP E	b42(E)	52	#6	36'-0"	
ENTRANCE RAMP E	b43(E)	25	#5	17'-0"	
ENTRANCE RAMP E	b44(E)	25	#5	23'-0"	
ENTRANCE RAMP E	b51(E)	486	#5	36'-0"	
ENTRANCE RAMP E	b50(E)	58	#5	16'-0"	
ENTRANCE RAMP E	b52(E)	52	#6	36'-0"	
ENTRANCE RAMP E	b53(E)	26	#6	40'-0"	
ENTRANCE RAMP E	b54(E)	25	#5	19'-0"	
ENTRANCE RAMP E	b55(E)	25	#5	13'-0"	
ENTRANCE RAMP E	b503(E)	13	#6	5'-9"	
ENTRANCE RAMP E	b501(E)	19	#6	20'-0"	
ENTRANCE RAMP E	d(E)	1156	#4	5'-10"	
ENTRANCE RAMP E	d1(E)	1260	#5	4'-7"	
ENTRANCE RAMP E	d500(E)	11	#5	6'-0"	
ENTRANCE RAMP E	d501(E)	6	#4	5'-10"	
ENTRANCE RAMP E	d508(E)	7	#8	16'-6"	
ENTRANCE RAMP E	d520(E)	7	#5	3'-6"	
ENTRANCE RAMP E	d521(E)	7	#4	3'-7"	
ENTRANCE RAMP E	s1(E)	24	#5	2'-0"	
ENTRANCE RAMP E	s2(E)	18	#5	5'-0"	
ENTRANCE RAMP E	x(E)	92	#5	4'-2"	
All SPANS	d301(E)	17350	#4	2'-4"	
All SPANS	d302(E)	2170	#4	2'-7"	
All SPANS	V301(E)	780	#4	30'-0"	

BENT BAR DETAILS

TYPE	MARK	a	b	c	d
	x(E)	0'-0"	3'-6"	0'-5 1/4"	
	d508(E)	4'-7"	3'-11"	8'-0"	0'-8 1/2"
	d(E)	3'-10"	2'-0"	1'-11"	
	d501(E)	3'-10"	2'-0"	1'-11"	
	d520(E)	2'-2"	1'-4"	1'-2"	
	d600(E)	2'-2"	0'-6"		0'-3"
	d521(E)	2'-2"	1'-5"		
	d601(E)	2'-0"	0'-6"		
	d1(E)	0'-6"	1'-7"	2'-6"	0'-3 1/4"
	d2(E)	0'-6"	1'-7"	0'-0"	0'-0"
	d500(E)	2'-6"	1'-4"	2'-2"	0'-3 1/4"
	u570(E)	5'-8"	0'-10"	0'-8"	
	d301(E)	0'-10"	0'-6"	Fo"	
	d302(E)	0'-10"	0'-9"	Fo"	

REINFORCEMENT BAR SCHEDULE

STRUCTURE	MARK	NUMBER	SIZE	LENGTH	TYPE
PARAPETS	b1(E)	15	#8	28'-11"	
PARAPETS	b2(E)	16	#5	27'-9"	
PARAPETS	b3(E)	54	#6	25'-2"	
PARAPETS	b4(E)	54	#5	22'-1"	
PARAPETS	b5(E)	74	#8	10'-9"	
PARAPETS	b6(E)	74	#5	13'-9"	
PARAPETS	b7(E)	102	#8	25'-6"	
PARAPETS	b8(E)	102	#5	23'-1"	
PARAPETS	b9(E)	52	#8	11'-9"	
PARAPETS	b10(E)	52	#5	11'-9"	
PARAPETS	b11(E)	16	#8	33'-7"	
PARAPETS	b12(E)	16	#5	32'-10"	
PARAPETS	b13(E)	8	#8	37'-0"	
PARAPETS	b14(E)	8	#5	36'-3"	
PARAPETS	b15(E)	16	#8	33'-9"	
PARAPETS	b16(E)	16	#5	32'-11"	
PARAPETS	b17(E)	16	#8	36'-6"	
PARAPETS	b18(E)	16	#5	35'-9"	
PARAPETS	d503(E)	5	#7	14'-4"	
PARAPETS	d504(E)	5	#5	10'-7"	
PARAPETS	d502(E)	841	#5	3'-4"	
PARAPETS	d503(E)	841	#5	2'-2"	
PARAPETS	d504(E)	772	#4	3'-6"	
PARAPETS	e(E)	104	#4	17'-1"	
PARAPETS	e1(E)	224	#4	15'-2"	
PARAPETS	e2(E)	296	#4	10'-9"	
PARAPETS	e3(E)	352	#4	16'-0"	
PARAPETS	e4(E)	208	#4	11'-9"	
PARAPETS	e5(E)	192	#4	16'-4"	
PARAPETS	e6(E)	128	#4	15'-7"	
PARAPETS	e7(E)	64	#4	17'-4"	
PARAPETS	e8(E)	64	#4	15'-7"	
PARAPETS	e9(E)	128	#4	17'-1"	
PARAPETS	e10(E)	64	#4	15'-8"	
PARAPETS	e11(E)	16	#4	18'-11"	
PARAPETS	e13(E)	24	#4	16'-8"	
PARAPETS	e14(E)	8	#4	5'-0"	
PARAPETS	e300(E)	4	#6	5'-8"	
PARAPETS	e301(E)	8	#5	2'-6"	
PARAPETS	e302(E)	4	#6	6'-5"	
PARAPETS	e303(E)	11	#5	3'-0"	
PARAPETS	e500(E)	2	#4	5'-9"	
PARAPETS	e520(E)	2	#8	9'-10"	
PARAPETS	d403(E)	24	#6	8'-11"	
PARAPETS	d404(E)	12	#6	5'-1"	
PARAPETS	d13(E)	74	#5	3'-9"	
PARAPETS	d14(E)	80	#5	3'-4"	
PARAPETS	d15(E)	80	#5	3'-7½"	

BENT BAR DETAILS

TYPE	MARK	a	b	c	d
	d502(E)	2'-6"	0'-11 1/2"	0'-4 1/4"	
	d15(E)	0'-6"	3'-1½"	1'-5 ¾"	
	d503(E)	2'-0"	2'-3 1/2"	5'-9"	
	d504(E)	2'-0"	2'-3 1/2"	2'-0"	
	d403(E)	2'-0"	1'-4"	2'-3"	
	d404(E)	3'-1"	2'-0"		

BENT BAR DIAGRAMS

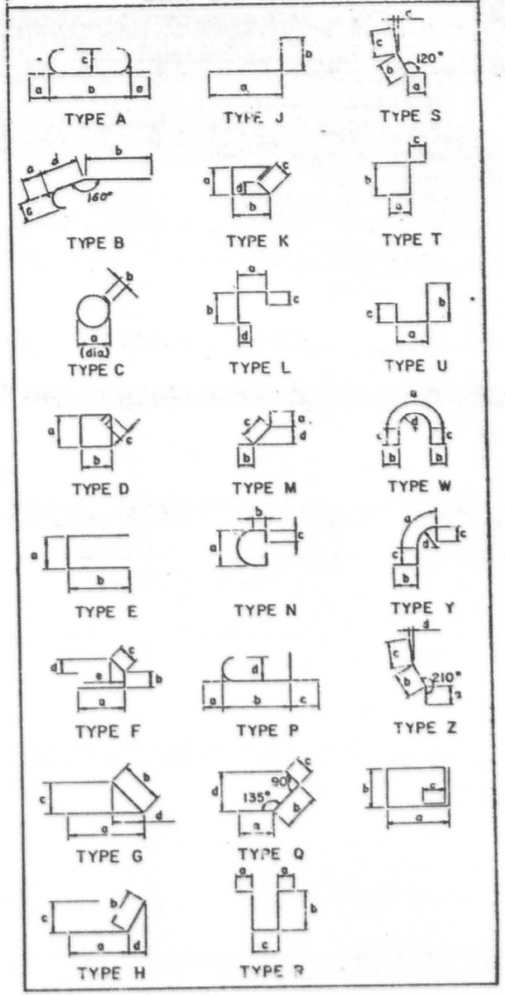

NOTE: All Dimensions are out-to-out

SHEET C44 OF C51

REVISIONS	
Name	Date

STATE OF ILLINOIS
DEPARTMENT OF TRANSPORTATION
F.A.I. ROUTE 90/94 (DAN RYAN EXPRESSWAY)
SECTION 1985-077BR COOK COUNTY
N.B. MAINLINE RECONSTRUCTION
STRUCTURE 016-1111
DECK BAR SCHEDULE
Scale : NONE
Date : AUG. 1988
Drawn By: CAD/AV
Checked By: M.E.M.
ENVIRODYNE ENGINEERS Inc.
Chicago, Illinois

⚠ 12-1-1988

FILE NAME: pw:\AECOM-NA-AWS1.aecomonline.local\AECOM_D502_NA\Documents\01 Americas\Transportation\60269938 Circle\Phase_II\000_CAD\008_Structural\Sign Structures\62A76 Sign Structure\62A76-Span-55329-Exist Plans
12:40:09 PM

HBM ENGINEERING GROUP, LLC	USER NAME = francisco.lopez	DESIGNED - JMI	REVISED -	
		CHECKED - MAI, JJS	REVISED -	
	PLOT SCALE = N.T.S	DRAWN - JMI	REVISED -	
	PLOT DATE = 1/24/2020	CHECKED - MAI, JJS	REVISED -	

STATE OF ILLINOIS
DEPARTMENT OF TRANSPORTATION

EXISTING RECORD DRAWINGS
STRUCTURE NO. 016-1111
SHEET NO.AS12-24 OF AS12-49SHEETS

F.A.I. RTE.	SECTION	COUNTY	TOTAL SHEETS	SHEET NO.
90/94/290	2015-019R	COOK	2155	1461
		CONTRACT NO. 62A76		
	ILLINOIS	FED. AID PROJECT		

FOR INFORMATION ONLY

FAI 90/94

1985-077B-R

Volume 13

INDEX OF VOLUMES		
VOL. NO.	DESCRIPTION	NO. OF SHEETS
	CIVIL	
1	ROADWAY PLANS & GENERAL SHEETS	127
2.	MAINTENANCE OF TRAFFIC & ROADWAY CROSS SECTIONS	45
	STRUCTURAL	
3.	STRUCTURE NO. 016-0137 (MAXWELL ST. TO 15TH ST.)	65
4.	STRUCTURE NO. 016-1110 (15TH ST. TO 16TH ST.)	33
5.	STRUCTURE NO. 016-1111 (16TH ST. TO 18TH ST.)	51
6.	STRUCTURE NO. 016-1112 (18TH ST. TO CERMAK RD.)	91
7.	STRUCTURE NO. 016-1113 (CERMAK RD. TO CHICAGO RIVER)	88
8.	STRUCTURE NO. 016-1114 & 1070 (CHICAGO RIVER BRIDGE)	16
9.	STRUCTURE NO. 016-1115 (I-55 INTERCHANGE-MAINLINE)	101
10.	STRUCTURE NO. 016-1047 & 1140 (I-55 INTERCHANGE-RAMPS)	53
11.	STRUCTURE NO. 016-1116 (CANAL ST. TO STEWART AVE.)	21
12.	STRUCTURE NO. 016-1117 & 1118 (STEWART AVE. TO 28TH PL.)	98
13.	MISCELLANEOUS VIADUCT DETAILS	88
	ELECTRICAL	
14	ROADWAY LIGHTING & SURVEILLANCE	49
	TOTAL	926

DESIGN DESIGNATION

100' 10' 20' 30'	1" = 100'	
0 50' 100'	1" = 10'	
0 50' 100'	1" = 50'	
0 50' 100'	1" = 40'	
0 50' 100'	1" = 30'	
0 50' 100'	1" = 20'	

FULL SIZE PLANS HAVE BEEN PREPARED USING STANDARD ENGINEERING SCALES, REDUCED SIZED PLANS WILL NOT CONFORM TO STANDARD SCALES, IN MAKING MEASUREMENTS ON REDUCED PLANS, THE ABOVE SCALES MAY BE USED.

CONTRACT NO. 80065

CONSULTANT SECTION ENGINEER: K. HENSTREET / J. KOS 312 705-42.9

COUNTY COOK SECTION 1985-077 R ROUTE I-90/94 (DAN RYAN EXPRESSWAY)

STATE OF ILLINOIS
DEPARTMENT OF TRANSPORTATION
DIVISION OF HIGHWAYS
PLANS FOR PROPOSED FEDERAL AID INTERSTATE HIGHWAY

SCALES		
PLAN	1 INCH = * FEET	* SEE PLANS
PROFILE HORIZ.	1 INCH = * FEET	
PROFILE VERT.	1 INCH = * FEET	
CROSS SECTIONS	1 INCH = * FEET HORIZONTAL 1 INCH = * FEET VERTICAL	

VOLUME NO. 13

F.A.I. ROUTE 90/94 (DAN RYAN EXPRESSWAY)

SECTION 1985-077 B-R

~~PROJECT~~

COOK COUNTY

~~C-91-430-85~~

NORTHBOUND MAINLINE RECONSTRUCTION
28TH ST. TO MAXWELL ST.



NET LENGTH = 11,934 FT. = 2.260 MILES
GROSS LENGTH = 11,934 FT. = 2.260 MILES

SHEET G1 OF 3

F.A. RTE.	SECTION	COUNTY	TOTAL SHEETS	SHEET NO.
90/94	R	COOK	88	1
F.H.W.A. REG.	ILLINOIS	PROJECT		
	*1985-077 B-R			
	P-91-17[illegible]			

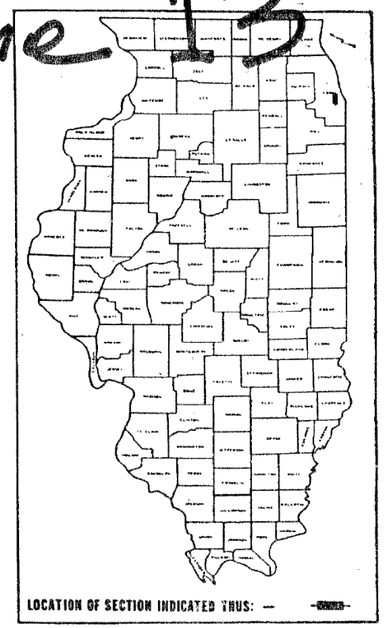

LOCATION OF SECTION INDICATED THUS: — ~~SECTION~~

STATE OF ILLINOIS
DEPARTMENT OF TRANSPORTATION
DIVISION OF HIGHWAYS

SUBMITTED _____ 19____ DISTRICT ENGINEER
EXAMINED _____ 19____ DIRECTOR OF PLANS AND CONTRACTS
PASSED _____ 19____ DIRECTOR OF HIGHWAYS
APPROVED _____ 19____ DIRECTOR DIVISION OF STRUCTURES

DEPARTMENT OF TRANSPORTATION
FEDERAL HIGHWAY ADMINISTRATION

DIVISION ENGINEER _____ DATE _____

HBM ENGINEERING GROUP, LLC	USER NAME = francisco.lopez	DESIGNED - JMI	REVISED -	
		CHECKED - MAI, JJS	REVISED -	
	PLOT SCALE = N.T.S	DRAWN - JMI	REVISED -	
	PLOT DATE = 1/24/2020	CHECKED - MAI, JJS	REVISED -	

STATE OF ILLINOIS
DEPARTMENT OF TRANSPORTATION

EXISTING RECORD DRAWINGS
STRUCTURE NO. 016-1111
SHEET NO. AS12-25 OF AS12-49 SHEETS

F.A.I. RTE.	SECTION	COUNTY	TOTAL SHEETS	SHEET NO.
90/94/290	2015-019R	COOK	2155	1462
		CONTRACT NO. 62A76		
		ILLINOIS	FED. AID PROJECT	

FILE NAME: pw:\\AECOM-NA-AWS1.aecomonline.local:AECOM_DS02_NA\Documents\01 AmericasTransportation\60269938 Circle\Phase_II\000_CAD\008_Structural\Sign Structures\62A76 Sign Structure\62A76-Span-55329-Exist Plans

12:40:14 PM

FOR INFORMATION ONLY

FEDERAL AID ROUTE NO.	SECTION	COUNTY	TOTAL SHEETS	SHEET NO.
90/94	#	COOK	88	2
STA.		TO STA.		
FED. RD. DIST. NO.	ILLINOIS	FED. AID PROJECT		

1985 - 077 B-R

INDEX OF SHEETS

1.	G1	TITLE SHEET
2.	G2	INDEX OF SHEETS AND TOTAL BILL OF MATERIAL
3.	G3	GENERAL PLAN AND GENERAL NOTES
		BEARINGS - STRUCTURE NO. 016-0137
4.	BRG 1	TYPE I ELASTOMERIC EXPANSION BEARINGS
5.	BRG 2	TYPE I ELASTOMERIC EXPANSION AND FIXED BEARINGS
6.	BRG 3	TYPE II ELASTOMERIC EXPANSION BEARINGS
7.	BRG 4	BOLSTER DETAILS
		BEARINGS - STRUCTURE NO. 016-1110
8.	BRG 5	TYPE I ELASTOMERIC EXPANSION BEARINGS
9.	BRG 6	TYPE II ELASTOMERIC EXPANSION BEARINGS
10.	BRG 7	FLOATING BEARING DETAILS
11.	BRG 8	BOLSTER DETAILS
12.	BRG 9	FIXED BEARINGS
		BEARINGS - STRUCTURE NO. 016-1111
13.	BRG 10	TYPE I ELASTOMERIC EXPANSION BEARINGS
14.	BRG 11	TYPE II ELASTOMERIC EXPANSION BEARINGS
15.	BRG 12	TYPE III ELASTOMERIC EXPANSION BEARINGS
16.	BRG 13	BOLSTER DETAILS
17.	BRG 14	FIXED BEARINGS
		BEARINGS - STRUCTURE NO. 016-1112
18.	BRG 15	TYPE I ELASTOMERIC EXPANSION BEARINGS
19.	BRG 16	TYPE II ELASTOMERIC EXPANSION BEARINGS
20.	BRG 17	BOLSTER DETAILS
21.	BRG 18	FIXED BEARINGS
		BEARINGS - STRUCTURE NO. 016-1113
22.	BRG 19	TYPE I ELASTOMERIC EXPANSION BEARINGS
23.	BRG 20	TYPE II ELASTOMERIC EXPANSION BEARINGS
24.	BRG 21	BOLSTER DETAILS
25.	BRG 22	FIXED BEARINGS
		BEARINGS - STRUCTURE NO. 016-1070
26.	BRG 23	TYPE II ELASTOMERIC EXPANSION BEARINGS
27.	BRG 24	PLATE GIRDER BEARINGS
		BEARINGS - STRUCTURE NO. 016-1115
28.	BRG 25	TYPE I ELASTOMERIC BEARINGS
29.	BRG 26	TYPE II ELASTOMERIC BEARINGS
30.	BRG 27	FIXED BEARINGS
		BEARINGS - STRUCTURE NOS. 016-1140 AND 016-1047
31.	BRG 28	TYPE I ELASTOMERIC BEARINGS
32.	BRG 29	TYPE II ELASTOMERIC BEARINGS
33.	BRG 30	TYPE IV ELASTOMERIC BEARINGS
34.	BRG 31	FIXED BEARINGS
		BEARINGS - STRUCTURE NO. 016-1116
35.	BRG 32	TYPE II ELASTOMERIC EXPANSION BEARINGS
36.	BRG 33	TYPE III ELASTOMERIC EXPANSION BEARINGS
37.	BRG 34	BOLSTER DETAILS
38.	BRG 35	BOLSTER DETAILS
39.	BRG 36	FIXED BEARINGS
		BEARINGS - STRUCTURE NOS. 016-1117 AND 016-1118
40.	BRG 37	TYPE I ELASTOMERIC EXPANSION BEARINGS
41.	BRG 38	TYPE II ELASTOMERIC EXPANSION BEARINGS
42.	BRG 39	TYPE IV ELASTOMERIC EXPANSION BEARINGS
43.	BRG 40	BOLSTER DETAILS
44.	BRG 41	FIXED BEARINGS
		BEARINGS - ALL STRUCTURES
45.	BRG 42	ANCHOR BOLT DETAILS
46.	BRG 43	ANCHOR BOLT ASSEMBLY SCHEDULE AND DETAILS
47.	BRG 44	ANCHOR BOLT REPAIR DETAILS
48.	BRG 45	CLIPPING SCHEDULE AND DETAILS
49.	BRG 46	SHIM SCHEDULE AND DETAILS
50.	BRG 47	SHIM SCHEDULE
51.	BRG 48	SHIMMING EXISTING BEARINGS
52.	BRG 49	SIDE RETAINER REPAIRS
53.	BRG 50	ADJUST AND REPOSITION BEARINGS
54.	BRG 51	SETTING ELASTOMERIC EXPANSION BEARINGS AND SCHEDULE OF QUANTITIES
		SCUPPERS - ALL STRUCTURES
55.	BS1	BRIDGE SCUPPER TYPE A ASSEMBLY
56.	BS2	BRIDGE SCUPPER TYPE B ASSEMBLY
57.	BS3	BRIDGE SCUPPER TYPE C ASSEMBLY
58.	BS4	BRIDGE SCUPPER TYPE A
59.	BS5	BRIDGE SCUPPER TYPE B
60.	BS6	BRIDGE SCUPPER TYPE C
		DECK DRAINAGE - ALL STRUCTURES
61.	DD1	DRAINAGE SCHEMATIC PLAN I
62.	DD2	DRAINAGE SCHEMATIC PLAN II
63.	DD3	DOWNSPOUTS AT CONCRETE PIER
64.	DD4	DOWNSPOUTS AT STEEL PIER
65.	DD5	LONGITUDINAL RUN AND DETAILS I
66.	DD6	LONGITUDINAL RUN AND DETAILS II
67.	DD7	TYPICAL DETAILS AND SECTIONS
68.	DD8	TYPICAL DETAILS
		EXPANSION JOINTS - ALL STRUCTURES
69.	TJ1	4-1/2" FINGER PLATE EXPANSION JOINT AND TROUGH
70.	TJ2	NEOPRENE EXPANSION JOINTS 2", 2-1/2", AND 4"
71.	TJ3	PREFORMED JOINT SEAL 2-1/2" AND 4"
		TEMPORARY TURNOUTS - ALL STRUCTURES
72.	TT1	TEMPORARY TURNOUTS AND CROSSOVERS
73.	TT2	TEMPORARY TURNOUT SPLICER DETAILS
		TEMPORARY SUPPORT TOWERS - ALL STRUCTURES
74.	TS1	TEMPORARY STRUCTURAL STEEL SUPPORT TOWERS
75.	TS2	TEMPORARY STRUCTURAL STEEL SUPPORT TOWERS
75A.	TS3	TEMPORARY STRUCTURAL STEEL SUPPORT TOWERS - MISC DETAILS.
		STRUCTURAL REPAIRS - ALL STRUCTURES
76.	SR1	CORROSION REPAIRS - TYPE 1
77.	SR2	FIELD SPLICE DETAILS
78.	SR3	END DIAPHRAGMS
79.	SR4	END DIAPHRAGMS
80.	SR5	STEEL REINFORCING
81.	SR6	STEEL REPAIR DETAILS
82.	SR7	STEEL REINFORCING
		DECK REMOVAL - ALL STRUCTURES
83.	DR1	DECK REMOVAL
		SUBSTRUCTURE REHABILITATION - ALL STRUCTURES
84.	PR1	PIER REPAIR DETAILS
		PARAPET DETAILS - ALL STRUCTURES
85.	PD1	PARAPET MOUNTED OVERHEAD SIGN STRUCTURES
86.	PD2	PARAPET MOUNTED JUNCTION BOXES
87.	PD3	PARAPET MOUNTED LIGHT POLES AND TYPICAL PARAPET CROSS SECTIONS
88.	PD4	STANDARD HIGHWAY TRAFFIC SIGNS
88A.	BR1	BRACKET FOR DECK OVERHANG.

TOTAL BILL OF MATERIAL

ITEM	UNIT	QUANTITY
JACK AND SHIM EXISTING LOW BEARINGS	EACH	10
JACK AND REPLACE BEARINGS	EACH	529
ANCHOR BOLT ASSEMBLIES	EACH	402
SIDE RETAINER REPAIRS - BEARINGS	EACH	19
ANCHOR BOLT REPAIRS	EACH	74
ADJUST AND REPOSITION BEARINGS	EACH	4
STRUCTURE REPAIR	LBS.	179,100
CLASS 'X' CONCRETE - FOUNDATION	C.Y.	181.2
REINFORCEMENT BARS	LBS	26270
STRUCTURE EXCAVATION	C.Y.	9303
CASSION SHAFT (2'-6"ø)	C.FI.	3627
FURNISH & INSTALL SHIM PLATES	LBS.	850

SHEET G 2 OF 3

REVISIONS	
Name	Date

STATE OF ILLINOIS
DEPARTMENT OF TRANSPORTATION
F.A.I. ROUTE 90/94 (DAN RYAN EXPRESSWAY)
SECTION 1985-077 B-R- COOK COUNTY
N.B. MAINLINE RECONSTRUCTION
VOLUME NO. 13
INDEX OF SHEETS
AND TOTAL BILL OF MATERIAL
Scale : NONE — Drawn By: SAF
Date : AUGUST, 1988 — Checked By: WPK
ENVIRODYNE ENGINEERS INC.
Chicago, Illinois

HBM ENGINEERING GROUP, LLC

USER NAME = francisco.lopez	DESIGNED - JMI	REVISED -	STATE OF ILLINOIS DEPARTMENT OF TRANSPORTATION	EXISTING RECORD DRAWINGS STRUCTURE NO. 016-1111	SHEET NO.AS12-26 OF AS12-49SHEETS
	CHECKED - MAI, JJS	REVISED -			
PLOT SCALE = N.T.S	DRAWN - JMI	REVISED -			
PLOT DATE = 1/24/2020	CHECKED - MAI, JJS	REVISED -			

F.A.I. RTE.	SECTION	COUNTY	TOTAL SHEETS	SHEET NO.
90/94/290	2015-019R	COOK	2155	1463
		CONTRACT NO. 62A76		
	ILLINOIS	FED. AID PROJECT		

FILE NAME: pw:\\AECOM-NA-AWS1.aecomonline.local:AECOM_DS02_NA\Documents\01 Americas\Transportation\60269938 Circle\Phase_II\000_CAD\008_Structural\Sign Structures\62A76 Sign Structure\62A76-Span-55329-Exist Plans

12:40:19 PM

FOR INFORMATION ONLY

FEDERAL AID ROUTE NO.	SECTION	COUNTY	TOTAL SHEETS	SHEET NO.
90/94	#	COOK	88	3
STA.	TO STA.			
FED. RD. DIST. NO.	ILLINOIS	FED. AID PROJECT		

1985-077 B-R

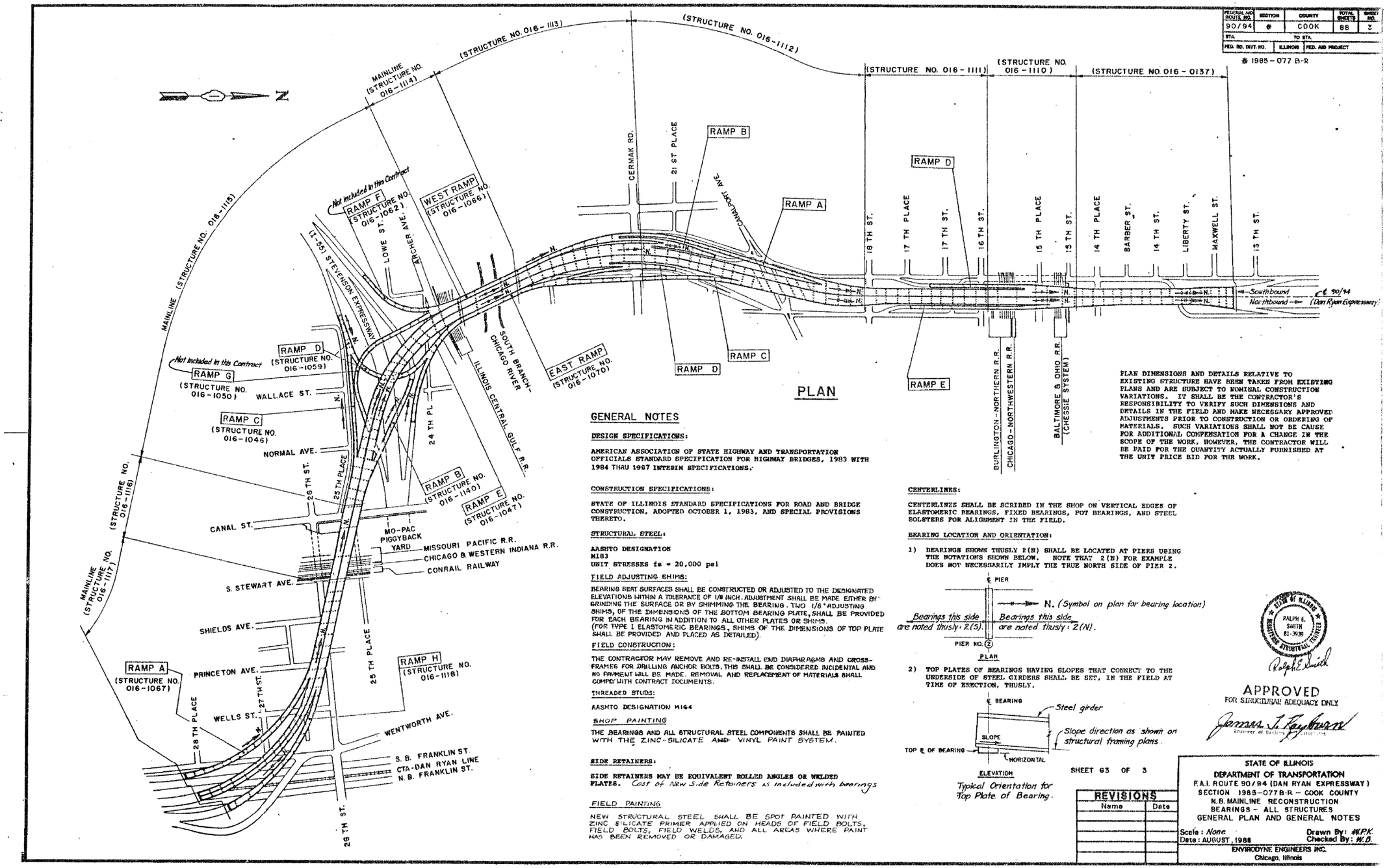

PLAN

PLAN DIMENSIONS AND DETAILS RELATIVE TO EXISTING STRUCTURE HAVE BEEN TAKEN FROM EXISTING PLANS AND ARE SUBJECT TO NORMAL CONSTRUCTION VARIATIONS. IT SHALL BE THE CONTRACTOR'S RESPONSIBILITY TO VERIFY SUCH DIMENSIONS AND DETAILS IN THE FIELD AND MAKE NECESSARY APPROVED ADJUSTMENTS PRIOR TO CONSTRUCTION OR ORDERING OF MATERIALS. SUCH VARIATIONS SHALL NOT BE CAUSE FOR ADDITIONAL COMPENSATION FOR A CHANGE IN THE SCOPE OF THE WORK, HOWEVER, THE CONTRACTOR WILL BE PAID FOR THE QUANTITY ACTUALLY FURNISHED AT THE UNIT PRICE BID FOR THE WORK.

GENERAL NOTES

DESIGN SPECIFICATIONS:

AMERICAN ASSOCIATION OF STATE HIGHWAY AND TRANSPORTATION OFFICIALS STANDARD SPECIFICATION FOR HIGHWAY BRIDGES, 1983 WITH 1984 THRU 1987 INTERIM SPECIFICATIONS.

CONSTRUCTION SPECIFICATIONS:

STATE OF ILLINOIS STANDARD SPECIFICATIONS FOR ROAD AND BRIDGE CONSTRUCTION, ADOPTED OCTOBER 1, 1983, AND SPECIAL PROVISIONS THERETO.

STRUCTURAL STEEL:

AASHTO DESIGNATION
M183
UNIT STRESSES fs = 20,000 psi

FIELD ADJUSTING SHIMS:

BEARING SEAT SURFACES SHALL BE CONSTRUCTED OR ADJUSTED TO THE DESIGNATED ELEVATIONS WITHIN A TOLERANCE OF 1/8 INCH. ADJUSTMENT SHALL BE MADE EITHER BY GRINDING THE SURFACE OR BY SHIMMING THE BEARING. TWO 1/8" ADJUSTING SHIMS, OF THE DIMENSIONS OF THE BOTTOM BEARING PLATE, SHALL BE PROVIDED FOR EACH BEARING IN ADDITION TO ALL OTHER PLATES OR SHIMS. (FOR TYPE I ELASTOMERIC BEARINGS, SHIMS OF THE DIMENSIONS OF TOP PLATE SHALL BE PROVIDED AND PLACED AS DETAILED).

FIELD CONSTRUCTION:

THE CONTRACTOR MAY REMOVE AND RE-INSTALL END DIAPHRAGMS AND CROSS-FRAMES FOR DRILLING ANCHOR BOLTS. THIS SHALL BE CONSIDERED INCIDENTAL AND NO PAYMENT WILL BE MADE. REMOVAL AND REPLACEMENT OF MATERIALS SHALL COMPLY WITH CONTRACT DOCUMENTS.

THREADED STUDS:

AASHTO DESIGNATION M164

SHOP PAINTING

THE BEARINGS AND ALL STRUCTURAL STEEL COMPONENTS SHALL BE PAINTED WITH THE ZINC-SILICATE AND VINYL PAINT SYSTEM.

SIDE RETAINERS:

SIDE RETAINERS MAY BE EQUIVALENT ROLLED ANGLES OR WELDED PLATES. *Cost of New Side Retainers is included with bearings*

FIELD PAINTING

NEW STRUCTURAL STEEL SHALL BE SPOT PAINTED WITH ZINC SILICATE PRIMER APPLIED ON HEADS OF FIELD BOLTS, FIELD BOLTS, FIELD WELDS, AND ALL AREAS WHERE PAINT HAS BEEN REMOVED OR DAMAGED.

CENTERLINES:

CENTERLINES SHALL BE SCRIBED IN THE SHOP ON VERTICAL EDGES OF ELASTOMERIC BEARINGS, FIXED BEARINGS, POT BEARINGS, AND STEEL BOLSTERS FOR ALIGNMENT IN THE FIELD.

BEARING LOCATION AND ORIENTATION:

1) BEARINGS SHOWN THUSLY 2(N) SHALL BE LOCATED AT PIERS USING THE NOTATIONS SHOWN BELOW. NOTE THAT 2(N) FOR EXAMPLE DOES NOT NECESSARILY IMPLY THE TRUE NORTH SIDE OF PIER 2.

PLAN

2) TOP PLATES OF BEARINGS HAVING SLOPES THAT CONNECT TO THE UNDERSIDE OF STEEL GIRDERS SHALL BE SET, IN THE FIELD AT TIME OF ERECTION, THUSLY.

ELEVATION

Typical Orientation for Top Plate of Bearing.

STATE OF ILLINOIS
REGISTERED STRUCTURAL ENGINEER
RALPH E. SMITH
81-39.99

APPROVED
FOR STRUCTURAL ADEQUACY ONLY

Engineer of Bridges and Structures

SHEET 63 OF 3

REVISIONS	
Name	Date

STATE OF ILLINOIS
DEPARTMENT OF TRANSPORTATION
F.A.I. ROUTE 90/94 (DAN RYAN EXPRESSWAY)
SECTION 1985-077B-R - COOK COUNTY
N.B. MAINLINE RECONSTRUCTION
BEARINGS - ALL STRUCTURES
GENERAL PLAN AND GENERAL NOTES

Scale : None
Date : AUGUST, 1988
Drawn By: W.P.K.
Checked By: W.D.

ENVIRODYNE ENGINEERS INC.
Chicago, Illinois

HBM ENGINEERING GROUP, LLC				
USER NAME = francisco.lopez	DESIGNED - JMI	REVISED -	STATE OF ILLINOIS DEPARTMENT OF TRANSPORTATION	EXISTING RECORD DRAWINGS STRUCTURE NO. 016-1111
	CHECKED - MAI, JJS	REVISED -		
PLOT SCALE = N.T.S	DRAWN - JMI	REVISED -		
PLOT DATE = 1/24/2020	CHECKED - MAI, JJS	REVISED -		SHEET NO.AS12-27 OF AS12-49SHEETS

F.A.I. RTE.	SECTION	COUNTY	TOTAL SHEETS	SHEET NO.
90/94/290	2015-019R	COOK	2155	1464
			CONTRACT NO. 62A76	
		ILLINOIS	FED. AID PROJECT	

FILE NAME: pw:\AECOM-NA-AWS1.aecomonline.local\AECOM_D502_NA\Documents\01 Americas\Transportation\60269938 Circle\Phase_II\000_CAD\008_Structural\Sign Structures\62A76 Sign Structure\62A76-Span-S5329-Exist Plans
12:40:24 PM

FOR INFORMATION ONLY

FEDERAL AID ROUTE NO.	SECTION	COUNTY	TOTAL SHEETS	SHEET NO.
90/94	*	COOK	88	55
STA.		TO STA.		
FED. RD. DIST. NO.	ILLINOIS	FED. AID PROJECT		

* 1985-077 B-R

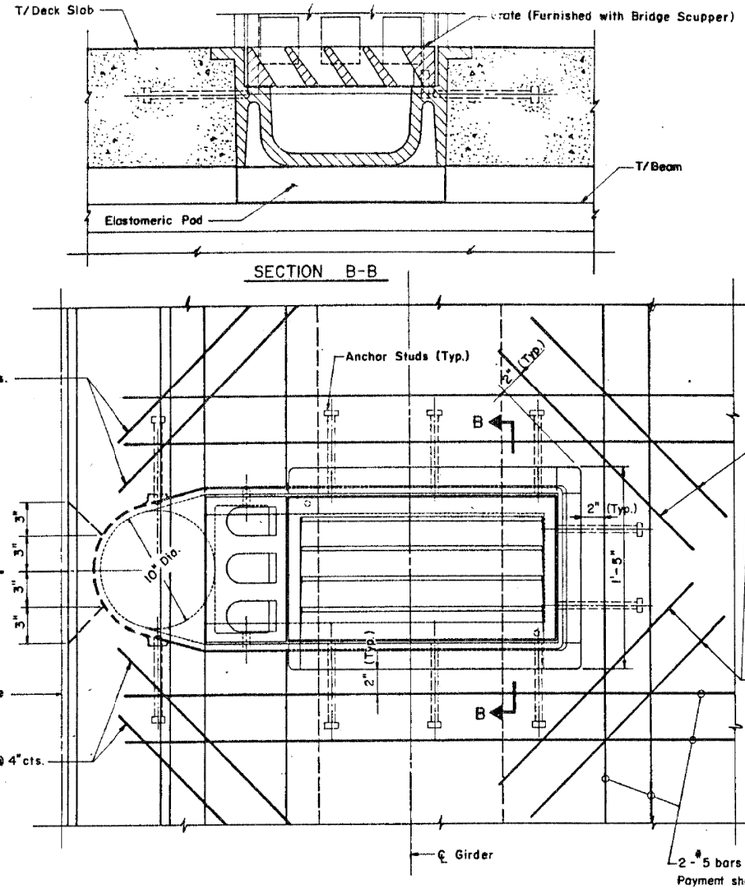

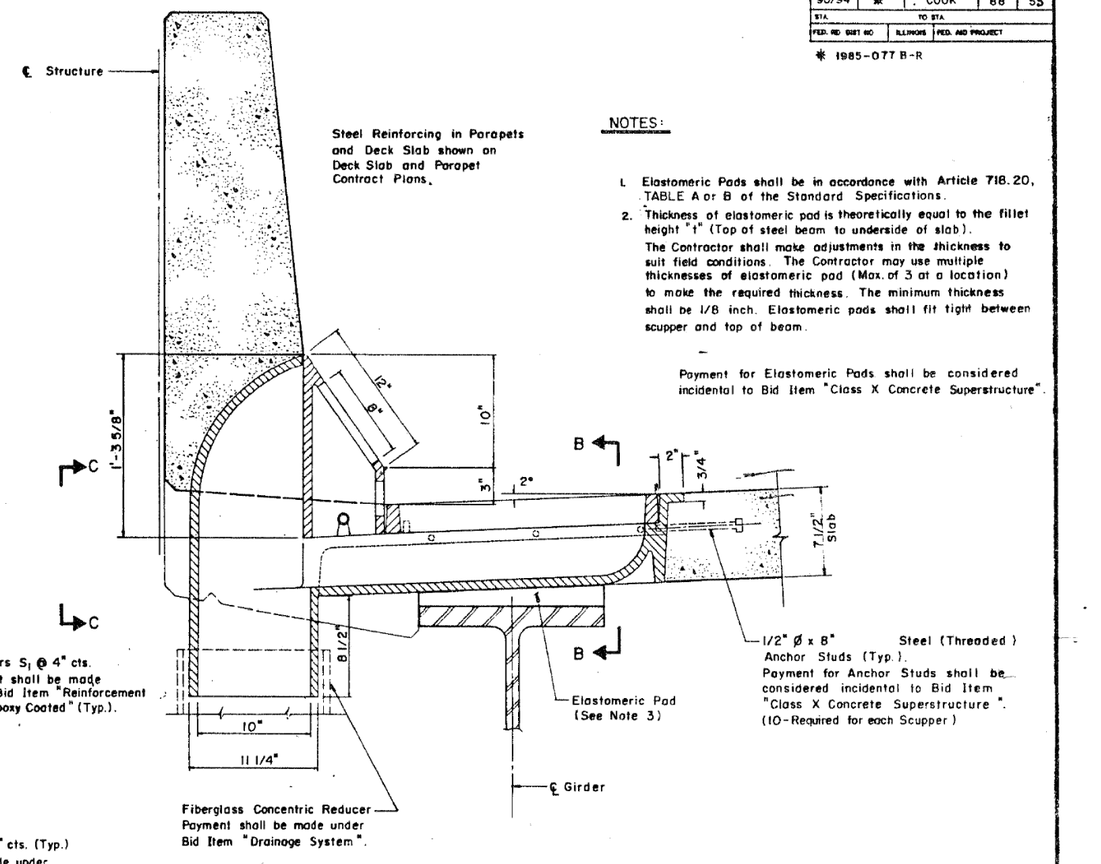

NOTES:

1. Elastomeric Pads shall be in accordance with Article 718.20, TABLE A or B of the Standard Specifications.
2. Thickness of elastomeric pad is theoretically equal to the fillet height "t" (Top of steel beam to underside of slab). The Contractor shall make adjustments in the thickness to suit field conditions. The Contractor may use multiple thicknesses of elastomeric pad (Max. of 3 at a location) to make the required thickness. The minimum thickness shall be 1/8 inch. Elastomeric pads shall fit tight between scupper and top of beam.

Payment for Elastomeric Pads shall be considered incidental to Bid Item "Class X Concrete Superstructure".

REINFORCEMENT BAR SCHEDULE

MARK	No.	SIZE	LENGTH	SHAPE
S_1 (E)	8	#5	2'-0"	——
S_2 (E)	6	#5	5'-0"	——

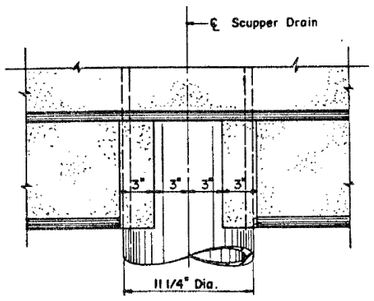

VIEW C-C

SHEET BS 1 OF BS 6

REVISIONS	
Name	Date

STATE OF ILLINOIS
DEPARTMENT OF TRANSPORTATION
F.A.I. ROUTE 90/94 (DAN RYAN EXPRESSWAY)
SECTION 1985-077 B-R — COOK COUNTY
N.B. MAINLINE RECONSTRUCTION
SCUPPERS - ALL STRUCTURES
BRIDGE SCUPPER — TYPE "A" ASSEMBLY
Scale : NONE Drawn By : L.L.
Date : AUGUST, 1988 Checked By : W.L.B.
ENVIRODYNE ENGINEERS INC.
Chicago Illinois

HBM ENGINEERING GROUP, LLC

USER NAME = francisco.lopez	DESIGNED - JMI	REVISED -
	CHECKED - MAI, JJS	REVISED -
PLOT SCALE = N.T.S	DRAWN - JMI	REVISED -
PLOT DATE = 1/24/2020	CHECKED - MAI, JJS	REVISED -

STATE OF ILLINOIS
DEPARTMENT OF TRANSPORTATION

EXISTING RECORD DRAWINGS
STRUCTURE NO. 016-1111
SHEET NO.AS12-28 OF AS12-49SHEETS

F.A.I. RTE.	SECTION	COUNTY	TOTAL SHEETS	SHEET NO.
90/94/290	2015-019R	COOK	2155	1465
		CONTRACT NO. 62A76		
		ILLINOIS	FED. AID PROJECT	

FILE NAME: pw:\AECOM-NA-AWS1.aecomonline.local:AECOM_D502_NA\Documents\01 Americas\Transportation\60269938 Circle\Phase_II\000_CAD\008_Structural\Sign Structures\62A76 Sign Structure\62A76-Span-55329-Exist Plans

12:40:29 PM

FOR INFORMATION ONLY

FEDERAL AID ROUTE NO.	SECTION	COUNTY	TOTAL SHEETS	SHEET NO.
90/94	*	COOK	88	56
STA.		TO STA.		
FED. RD. DIST NO.	ILLINOIS	FED. AID PROJECT		

1985-077 B-R

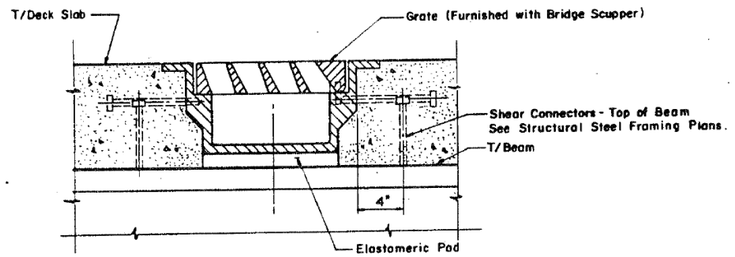

SECTION B-B

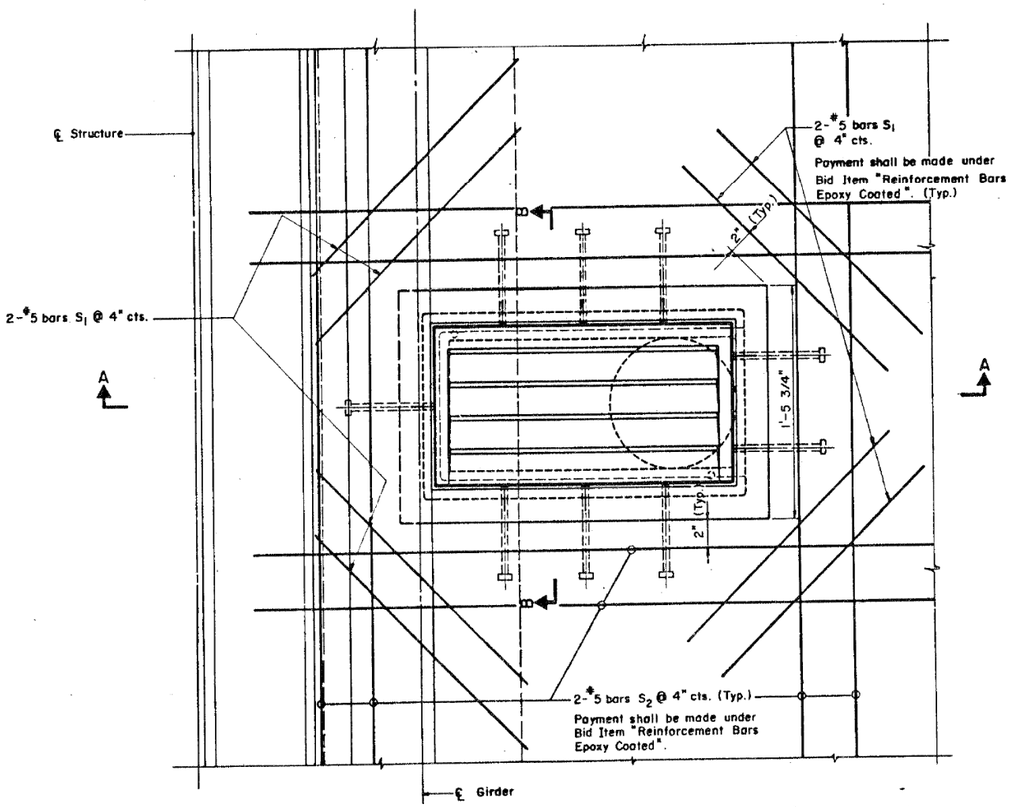

PLAN

REINFORCEMENT BAR SCHEDULE

MARK	No.	SIZE	LENGTH	SHAPE
S_1(E)	8	#5	2'-0"	——
S_2(E)	8	#5	5'-0"	——

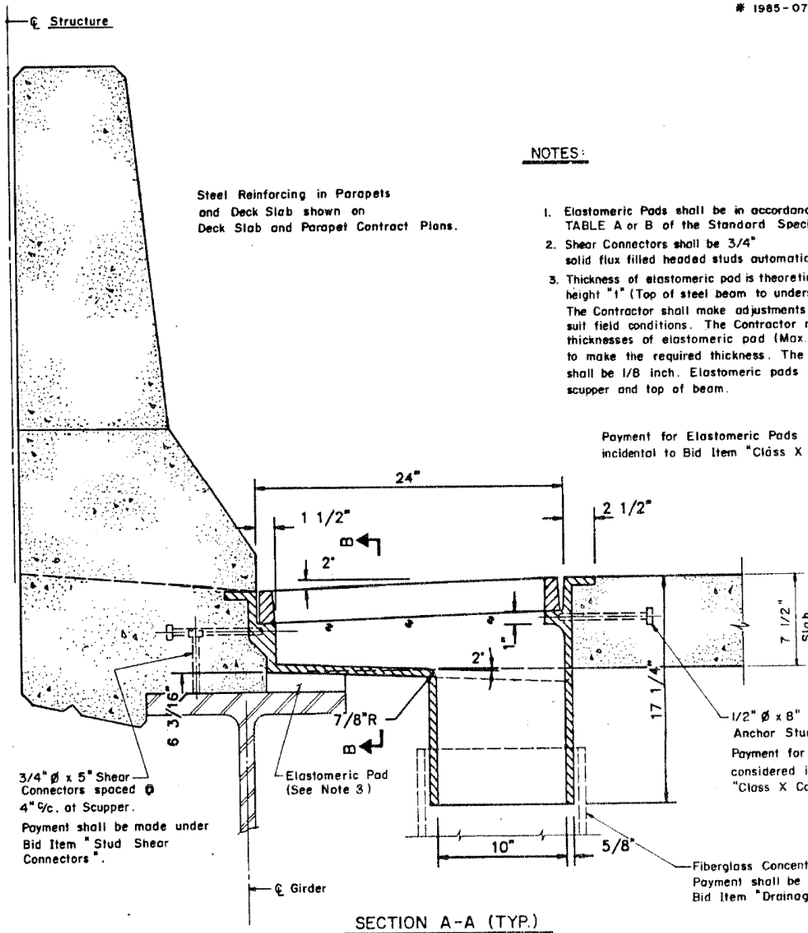

SECTION A-A (TYP.)

SECTION THRU MEDIAN PARAPET-SHOWN
(Similar if Type "B" Scuppers are used at Outside Parapet.)

NOTES:

1. Elastomeric Pads shall be in accordance with Article 718.20, TABLE A or B of the Standard Specifications.
2. Shear Connectors shall be 3/4" STL. granular or solid flux filled headed studs automatically end welded.
3. Thickness of elastomeric pad is theoretically equal to the fillet height "t" (Top of steel beam to underside of slab). The Contractor shall make adjustments in the thickness to suit field conditions. The Contractor may use multiple thicknesses of elastomeric pad (Max. of 3 at a location) to make the required thickness. The minimum thickness shall be 1/8 inch. Elastomeric pads shall fit tight between scupper and top of beam.

Payment for Elastomeric Pads shall be considered incidental to Bid Item "Class X Concrete Superstructure".

SHEET BS 2 OF BS 6

REVISIONS	
Name	Date

STATE OF ILLINOIS
DEPARTMENT OF TRANSPORTATION
F.A.I. ROUTE 90/94 (DAN RYAN EXPRESSWAY)
SECTION 1985-077 B-R — COOK COUNTY
N.B. MAINLINE RECONSTRUCTION
SCUPPERS — ALL STRUCTURES
BRIDGE SCUPPER — TYPE "B"
ASSEMBLY

Scale : NONE
Date : AUGUST, 1988
Drawn By : L.L.
Checked By : W.L.B.

ENVIRODYNE ENGINEERS INC.
Chicago, Illinois

FILE NAME: pw:\\AECOM-NA-AWS1.aecomonline.local:AECOM_DS02_NA\Documents\01 Americas\Transportation\60269938 CirclePhase_III\000_CAD\008_StructuralFiles\Sign Structures\62A76 Sign Structure\62A76-Span-55329-Exist Plans

HBM ENGINEERING GROUP, LLC	USER NAME = francisco.lopez	DESIGNED - JMI	REVISED -	
		CHECKED - MAI, JJS	REVISED -	
	PLOT SCALE = N.T.S	DRAWN - JMI	REVISED -	
	PLOT DATE = 1/24/2020	CHECKED - MAI, JJS	REVISED -	

STATE OF ILLINOIS
DEPARTMENT OF TRANSPORTATION

EXISTING RECORD DRAWINGS
STRUCTURE NO. 016-1111
SHEET NO.AS12-29 OF AS12-49SHEETS

F.A.I. RTE.	SECTION	COUNTY	TOTAL SHEETS	SHEET NO.
90/94/290	2015-019R	COOK	2155	1466
		CONTRACT NO. 62A76		
	ILLINOIS	FED. AID PROJECT		

12:40:34 PM

FOR INFORMATION ONLY

FEDERAL AID ROUTE NO.	SECTION	COUNTY	TOTAL SHEETS	SHEET NO.
90/94	*	COOK	88	57
STA.		TO STA.		
FED. RD. DIST. NO.	ILLINOIS	FED. AID PROJECT		

* 1985-077 B-R

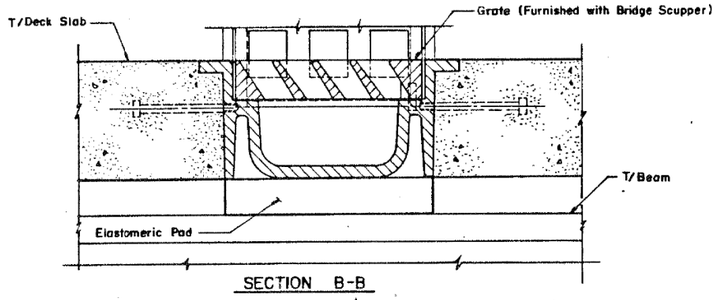

SECTION B-B

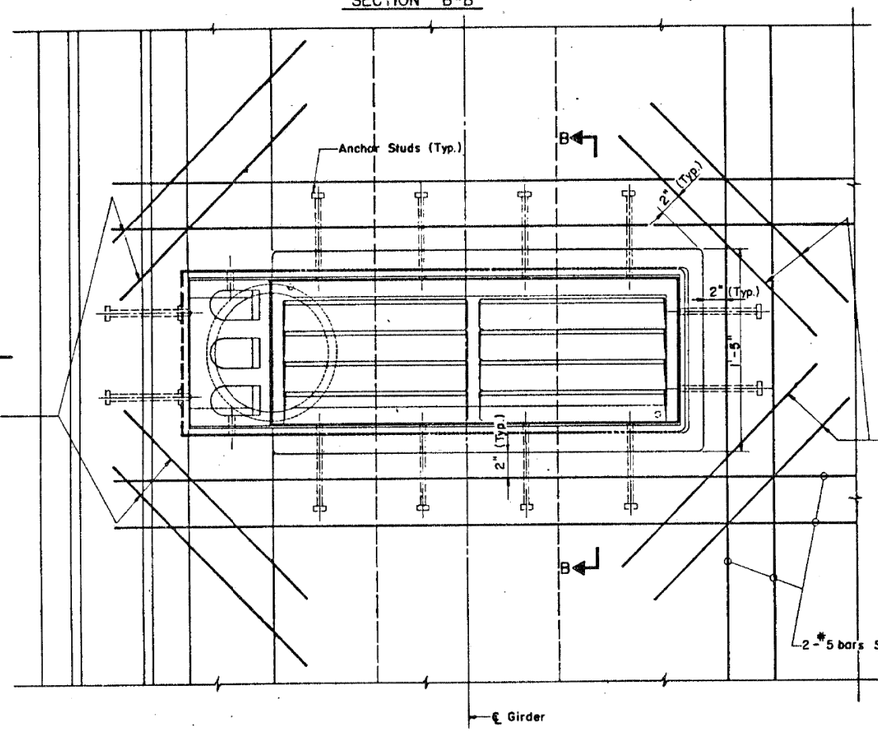

PLAN

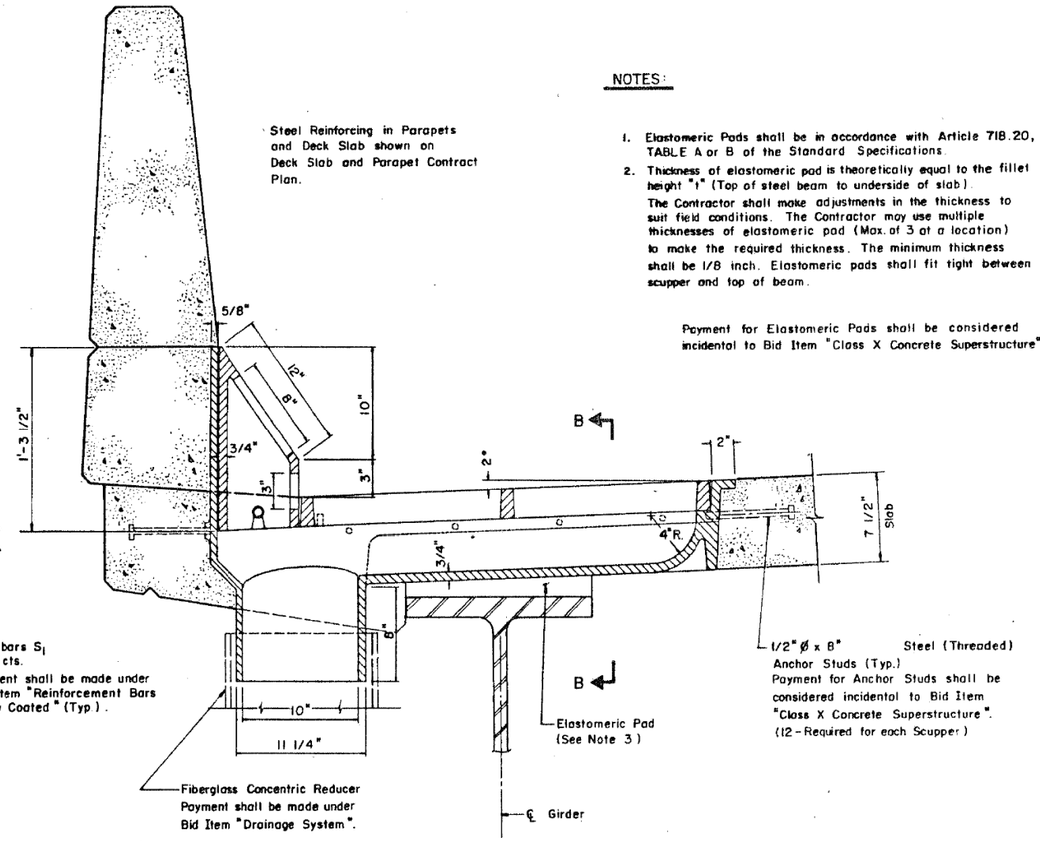

SECTION A-A

Section Thru Outside Parapet — Shown

NOTES:

1. Elastomeric Pads shall be in accordance with Article 718.20, TABLE A or B of the Standard Specifications.
2. Thickness of elastomeric pad is theoretically equal to the fillet height "I" (Top of steel beam to underside of slab). The Contractor shall make adjustments in the thickness to suit field conditions. The Contractor may use multiple thicknesses of elastomeric pad (Max. of 3 at a location) to make the required thickness. The minimum thickness shall be 1/8 inch. Elastomeric pads shall fit tight between scupper and top of beam.

Payment for Elastomeric Pads shall be considered incidental to Bid Item "Class X Concrete Superstructure".

REINFORCEMENT BAR SCHEDULE

MARK	No.	SIZE	LENGTH	SHAPE
S_1 (E)	8	#5	2'-0"	——
S_2 (E)	6	#5	5'-0"	——

SHEET BS 3 OF BS 6

REVISIONS	
Name	Date

STATE OF ILLINOIS
DEPARTMENT OF TRANSPORTATION
F.A.I. ROUTE 90/94 (DAN RYAN EXPRESSWAY)
SECTION 1985-077 B-R — COOK COUNTY
N.B. MAINLINE RECONSTRUCTION
SCUPPERS - ALL STRUCTURES
BRIDGE SCUPPER — TYPE "C" ASSEMBLY

Scale : NONE
Date : AUGUST, 1988
Drawn By : L.L.
Checked By : W.L.B.

ENVIRODYNE ENGINEERS INC.
Chicago, Illinois

FILE NAME: pw:\\AECOM-NA-AWS1.aecomonline.local:AECOM_D502_NAIDocuments\01 Americas\Transportation\60269938 CirclePhase_II\000_CAD\008_Structural\Sign Structures\62A76 Sign Structure\62A76-Span-SS329-Exist Plans

HBM ENGINEERING GROUP, LLC	USER NAME = francisco.lopez	DESIGNED - JMI	REVISED -	STATE OF ILLINOIS DEPARTMENT OF TRANSPORTATION	EXISTING RECORD DRAWINGS STRUCTURE NO. 016-1111
		CHECKED - MAI, JJS	REVISED -		
	PLOT SCALE = N.T.S	DRAWN - JMI	REVISED -		SHEET NO.AS12-30 OF AS12-49SHEETS
	PLOT DATE = 1/24/2020	CHECKED - MAI, JJS	REVISED -		

F.A.I. RTE.	SECTION	COUNTY	TOTAL SHEETS	SHEET NO.
90/94/290	2015-019R	COOK	2155	1467
		CONTRACT NO. 62A76		
	ILLINOIS	FED. AID PROJECT		

12:40:39 PM

FOR INFORMATION ONLY

FEDERAL AID ROUTE NO.	SECTION	COUNTY	TOTAL SHEETS	SHEET NO.
90/94	*	COOK	88	58
STA.		TO STA.		
FED. RD. DIST. NO.	ILLINOIS	FED. AID PROJECT		

* 1985-077 B-R

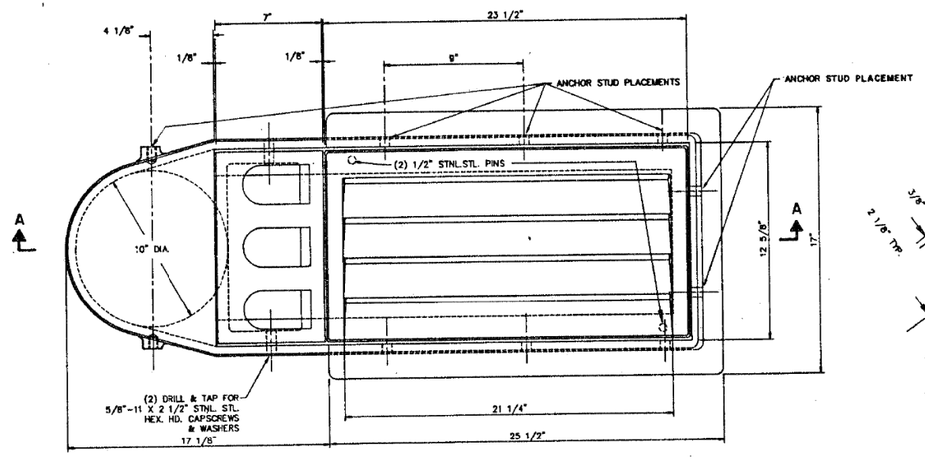

PLAN

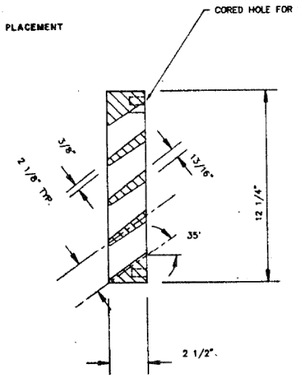

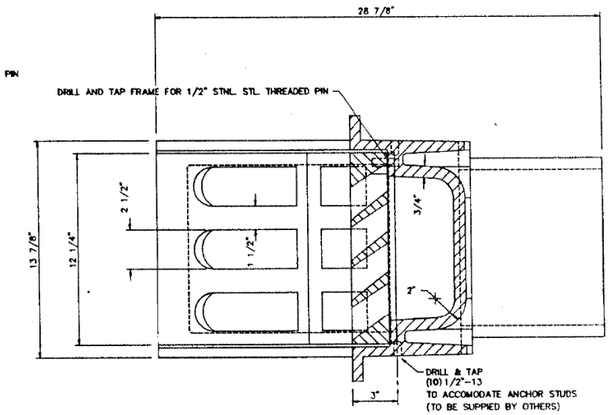

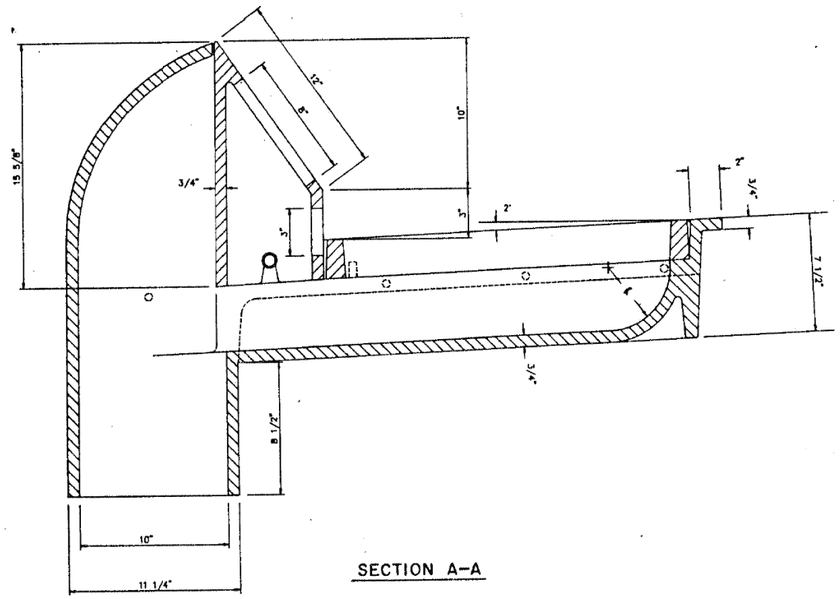

SECTION A-A

BRIDGE SCUPPER - TYPE "A"

NF-0332 445
ESTIMATED WEIGHT 512#

SCHEDULE OF QUANTITIES	
STRUCTURE	No. REQUIRED
016-0137	10
016-1110	8
016-1111	11
016-1112	26
016-1113	3
016-1114	0
016-1070	0
016-1115	8
016-1140	2
016-1047	2
016-1116	8
016-1117	27
016-1118	2
TOTAL	107

ALL MATERIALS SHOWN ON THIS SHEET ARE FURNISHED UNDER A SEPARATE SUPPLY CONTRACT (SECTION 1988-004 I), UNLESS NOTED OTHERWISE.

MATERIAL: CAST GRAY IRON ASTM A-48, CLASS 35B.
FINISH: NONE

SHEET BS 4 OF BS 6

REVISIONS	
Name	Date

STATE OF ILLINOIS
DEPARTMENT OF TRANSPORTATION
F.A.I. ROUTE 90/94 (DAN RYAN EXPRESSWAY)
SECTION 1985-077 B-R — COOK COUNTY
N.B. MAINLINE RECONSTRUCTION
SCUPPERS - ALL STRUCTURES
BRIDGE SCUPPER TYPE A
Scale: NONE Drawn By: R.E.P.
Date: AUGUST, 1988 Checked By: W.P.K.
ENVIRODYNE ENGINEERS INC.
Chicago, Illinois

FILE NAME: pw:\AECOM-NA-AWS1.aecomonline.local\AECOM_DS02_NA\Documents\01 Americas\Transportation\60269938 Circle\Phase_II\000_CAD\008_Structural\Sign Structures\62A76 Sign Structure\62A76-Span-SS329-Exist Plans
12:40:44 PM

HBM ENGINEERING GROUP, LLC	USER NAME = francisco.lopez	DESIGNED - JMI	REVISED -	
		CHECKED - MAI, JJS	REVISED -	
	PLOT SCALE = N.T.S	DRAWN - JMI	REVISED -	
	PLOT DATE = 1/24/2020	CHECKED - MAI, JJS	REVISED -	

STATE OF ILLINOIS
DEPARTMENT OF TRANSPORTATION

EXISTING RECORD DRAWINGS
STRUCTURE NO. 016-1111
SHEET NO. AS12-31 OF AS12-49 SHEETS

F.A.I. RTE.	SECTION	COUNTY	TOTAL SHEETS	SHEET NO.
90/94/290	2015-019R	COOK	2155	1468
		CONTRACT NO. 62A76		
	ILLINOIS	FED. AID PROJECT		

FOR INFORMATION ONLY

FEDERAL AID ROUTE NO.	SECTION	COUNTY	TOTAL SHEETS	SHEET NO.
90/94	*	COOK	88	59
STA.		TO STA.		
FED. RD. DIST. NO.	ILLINOIS	FED. AID PROJECT		

* 1985 - 077 B-R

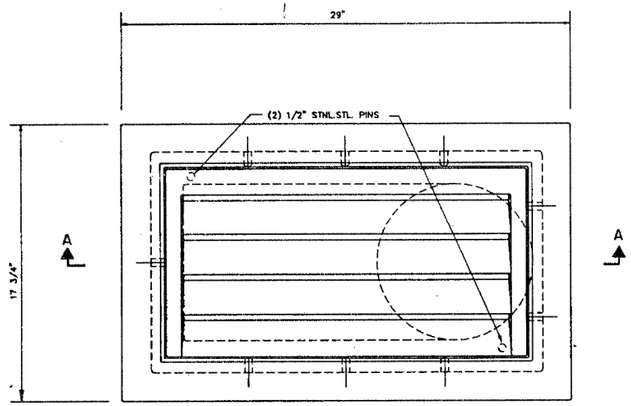

PLAN

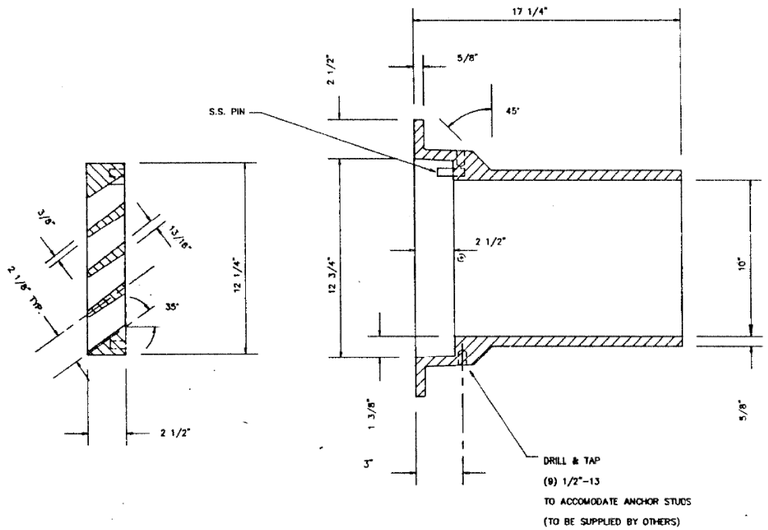

BRIDGE SCUPPER - TYPE "B"

NF-0332 435
ESTIMATED WEIGHT 235 #

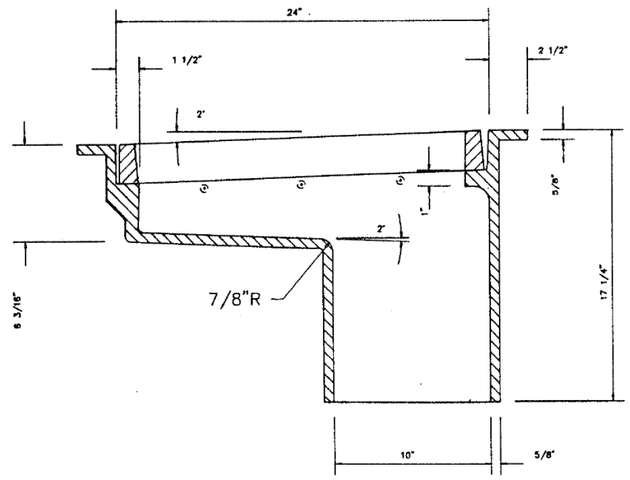

SECTION A-A

SCHEDULE OF QUANTITIES	
STRUCTURE	No. REQUIRED
016-0137	0
016-1110	0
016-1111	0
016-1112	1
016-1113	2
016-1114	10
016-1070	0
016-1115	3
016-1140	0
016-1047	0
016-1116	0
016-1117	7
016-1118	3
TOTAL	26

ALL MATERIALS SHOWN ON THIS SHEET ARE FURNISHED UNDER A SEPARATE SUPPLY CONTRACT (SECTION 1988-004 I), UNLESS NOTED OTHERWISE.

MATERIAL: CAST GRAY IRON ASTM A-48, CLASS 35B

FINISH: NONE

SHEET BS5 OF BS6

REVISIONS	
Name	Date

STATE OF ILLINOIS
DEPARTMENT OF TRANSPORTATION
F.A.I. ROUTE 90/94 (DAN RYAN EXPRESSWAY)
SECTION 1985-077BR — COOK COUNTY
N.B. MAINLINE RECONSTRUCTION
SCUPPERS - ALL STRUCTURES
BRIDGE SCUPPER TYPE B
Scale: NONE Drawn By: R.E.P.
Date: AUGUST, 1988 Checked By: W.P.K.
ENVIRODYNE ENGINEERS INC.
Chicago, Illinois

HBM ENGINEERING GROUP, LLC

USER NAME = francisco.lopez	DESIGNED - JMI	REVISED -	STATE OF ILLINOIS DEPARTMENT OF TRANSPORTATION	EXISTING RECORD DRAWINGS STRUCTURE NO. 016-1111
	CHECKED - MAI, JJS	REVISED -		
PLOT SCALE = N.T.S	DRAWN - JMI	REVISED -		
PLOT DATE = 1/24/2020	CHECKED - MAI, JJS	REVISED -		SHEET NO.AS12-32 OF AS12-49SHEETS

F.A.I. RTE.	SECTION	COUNTY	TOTAL SHEETS	SHEET NO.
90/94/290	2015-019R	COOK	2155	1469
		CONTRACT NO. 62A76		
	ILLINOIS	FED. AID PROJECT		

FILE NAME: pw:\\AECOM-NA-AWS1.aecomonline.local:AECOM_DS02_NA\Documents\01 Americas\Transportation\60269938 Circle\Phase_II\000_CAD\008_Structural\Sign Structures\62A76 Sign Structure\62A76-Span-55329-Exist Plans

12:40:50 PM

FOR INFORMATION ONLY

FEDERAL AID ROUTE NO.	SECTION	COUNTY	TOTAL SHEETS	SHEET NO.
90/94	*	COOK	88	60
STA.		TO STA.		
FED. RD. DIST. NO.	ILLINOIS	FED. AID PROJECT		

*1985-077 B-R

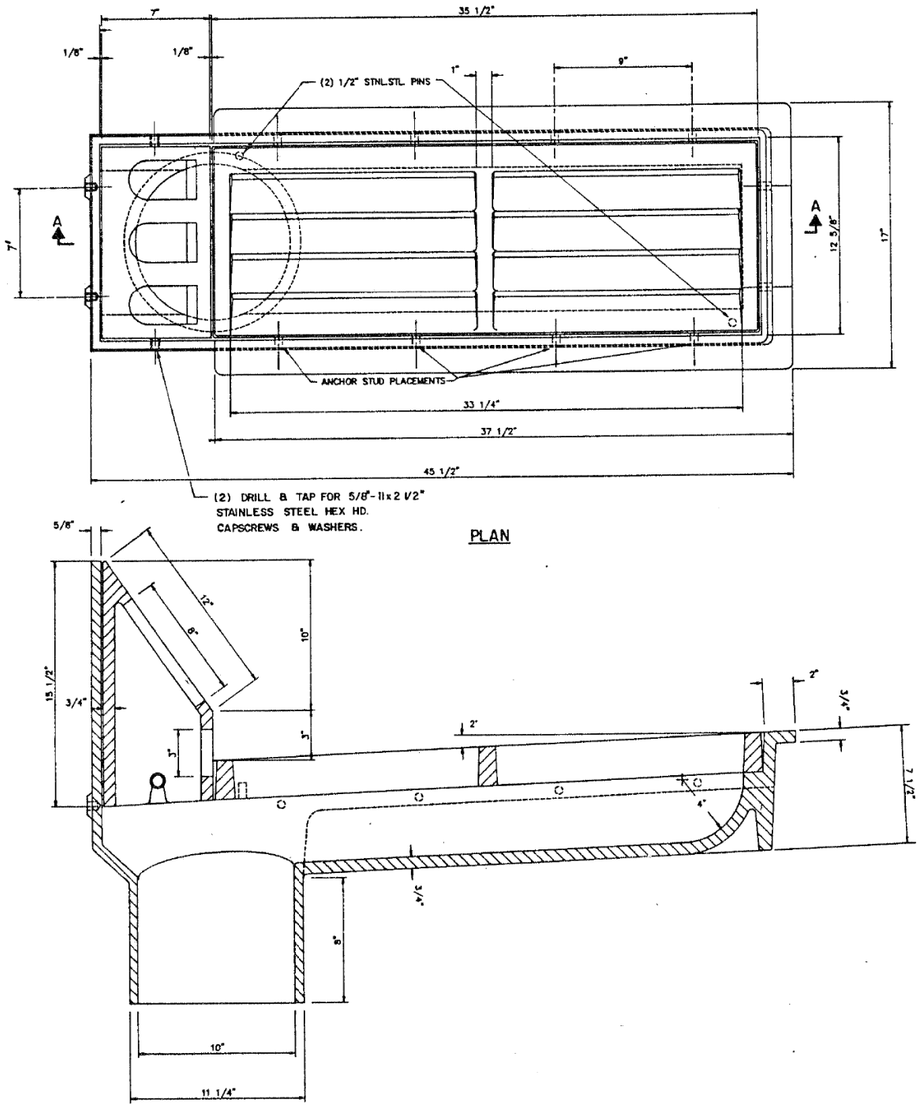

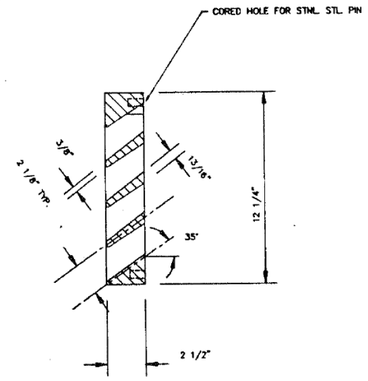

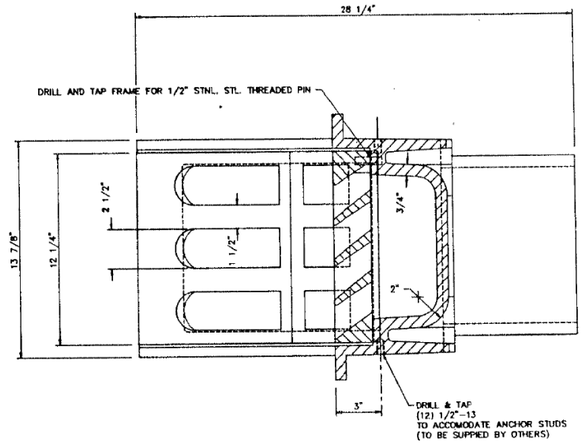

BRIDGE SCUPPER – TYPE "C"

NF-0332 440
ESTIMATED WEIGHT 623#

SCHEDULE OF QUANTITIES	
STRUCTURE	No. REQUIRED
016-0137	11
016-1110	11
016-1111	12
016-1112	12
016-1113	12
016-1114	0
016-1070	4
016-1115	20
016-1140	2
016-1047	1
016-1116	6
016-1117	0
016-1118	16
TOTAL	109

ALL MATERIALS SHOWN ON THIS SHEET ARE FURNISHED UNDER A SEPARATE SUPPLY CONTRACT (SECTION 1988-004 I), UNLESS NOTED OTHERWISE.

MATERIAL: CAST GRAY IRON ASTM A-48, CLASS 35B
FINISH: NONE

SHEET BS6 OF BS6

REVISIONS	
Name	Date

STATE OF ILLINOIS
DEPARTMENT OF TRANSPORTATION
F.A.I. ROUTE 90/94 (DAN RYAN EXPRESSWAY)
SECTION 1985-077 B-R —— COOK COUNTY
N.B. MAINLINE RECONSTRUCTION
SCUPPERS - ALL STRUCTURES
BRIDGE SCUPPER TYPE C
Scale: NONE
Date: AUGUST, 1988
Drawn By: R.E.P.
Checked By: W.P.K.
ENVIRODYNE ENGINEERS INC.
Chicago, Illinois

FILE NAME: pw:\AECOM-NA-AWS1.aecomonline.local:AECOM_DS02_NA\Documents\01 Americas\Transportation\60269938 CirclePhase_II\000_CAD\008_StructuralSign Structures\62A76 Sign Structure\62A76-Span-55329-Exist Plans
12:40:55 PM

USER NAME = francisco.lopez	DESIGNED - JMI	REVISED -
	CHECKED - MAI, JJS	REVISED -
PLOT SCALE = N.T.S	DRAWN - JMI	REVISED -
PLOT DATE = 1/24/2020	CHECKED - MAI, JJS	REVISED -

HBM ENGINEERING GROUP, LLC

STATE OF ILLINOIS
DEPARTMENT OF TRANSPORTATION

EXISTING RECORD DRAWINGS
STRUCTURE NO. 016-1111
SHEET NO.AS12-33 OF AS12-49SHEETS

F.A.I. RTE.	SECTION	COUNTY	TOTAL SHEETS	SHEET NO.
90/94/290	2015-019R	COOK	2155	1470
		CONTRACT NO. 62A76		
	ILLINOIS	FED. AID PROJECT		

FOR INFORMATION ONLY

FEDERAL AID ROUTE NO.	SECTION	COUNTY	TOTAL SHEETS	SHEET NO.
90/94	*	COOK	88	61
STA.		TO STA.		
FED. ROAD DIST. NO.	ILLINOIS	FED. AID PROJECT		

* 1985-077B-R

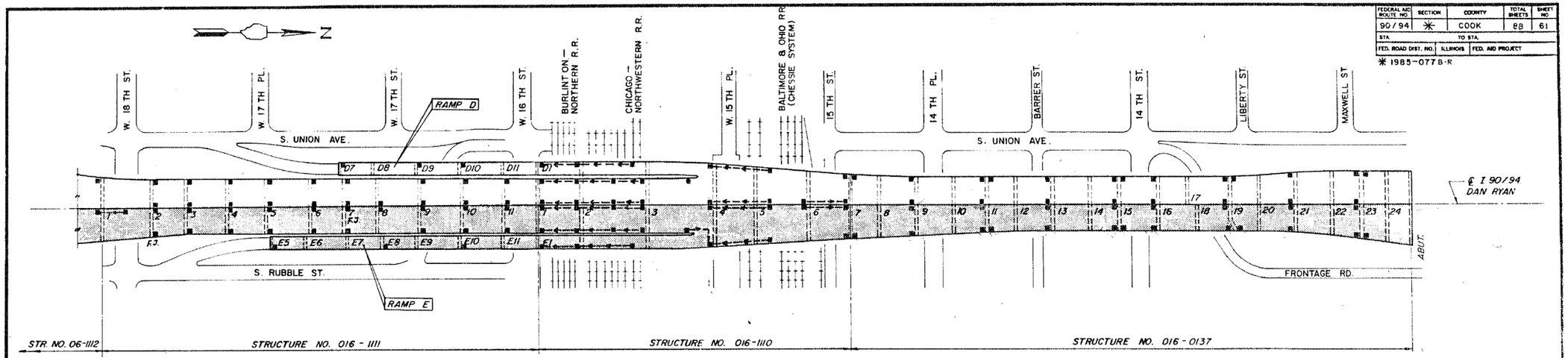

PLAN

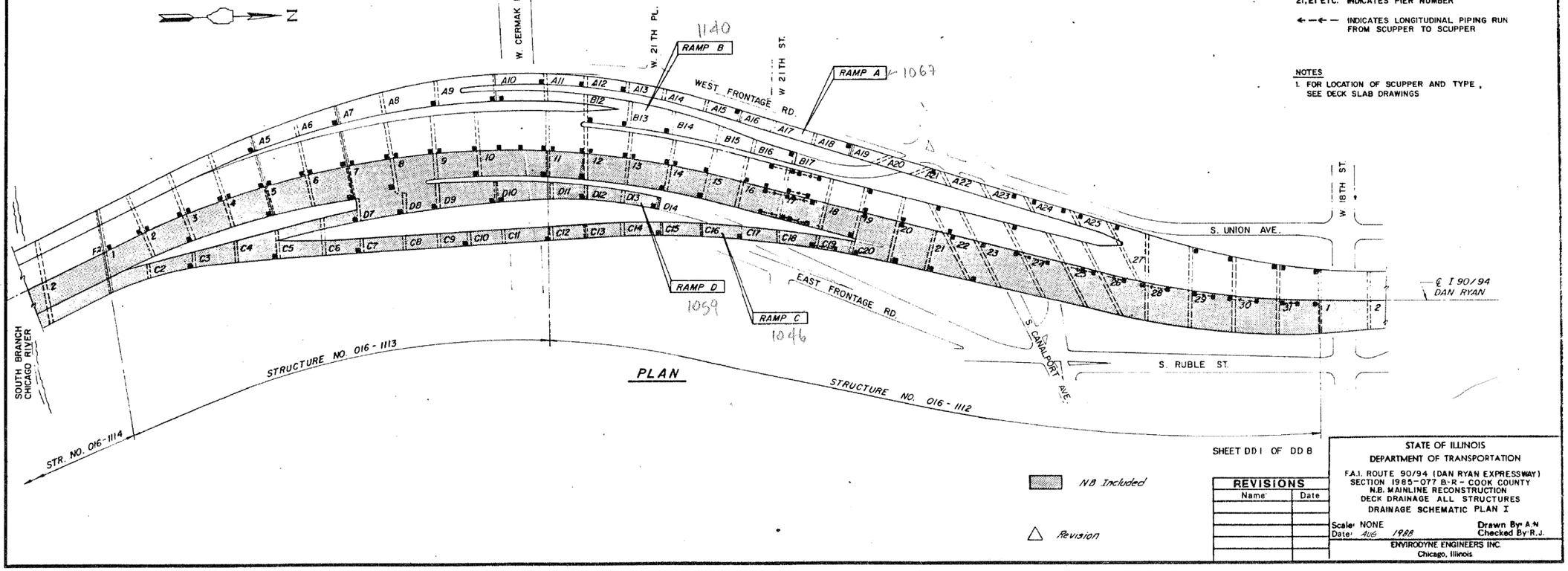

PLAN

LEGEND

■ INDICATES SCUPPER ON DECK SLAB

21, E1 ETC. INDICATES PIER NUMBER

←—←— INDICATES LONGITUDINAL PIPING RUN FROM SCUPPER TO SCUPPER

NOTES

1. FOR LOCATION OF SCUPPER AND TYPE, SEE DECK SLAB DRAWINGS

N.B Included

△ Revision

SHEET DD 1 OF DD 8

REVISIONS	
Name	Date

STATE OF ILLINOIS
DEPARTMENT OF TRANSPORTATION
F.A.I. ROUTE 90/94 (DAN RYAN EXPRESSWAY)
SECTION 1985-077 B-R - COOK COUNTY
N.B. MAINLINE RECONSTRUCTION
DECK DRAINAGE ALL STRUCTURES
DRAINAGE SCHEMATIC PLAN I

Scale: NONE — Drawn By: A.N
Date: AUG 1988 — Checked By: R.J.

ENVIRODYNE ENGINEERS INC.
Chicago, Illinois

HBM ENGINEERING GROUP, LLC

USER NAME = francisco.lopez		DESIGNED - JMI		REVISED -	
		CHECKED - MAI, JJS		REVISED -	
PLOT SCALE = N.T.S		DRAWN - JMI		REVISED -	
PLOT DATE = 1/24/2020		CHECKED - MAI, JJS		REVISED -	

STATE OF ILLINOIS
DEPARTMENT OF TRANSPORTATION

EXISTING RECORD DRAWINGS
STRUCTURE NO. 016-1111
SHEET NO.AS12-34 OF AS12-49SHEETS

F.A.I. RTE.	SECTION	COUNTY	TOTAL SHEETS	SHEET NO.
90/94/290	2015-019R	COOK	2155	1471
		CONTRACT NO. 62A76		
		ILLINOIS	FED. AID PROJECT	

FILE NAME: pw:\\AECOM-NA-AWS1.aecomonline.local:AECOM_DS02_NA\Documents\01 Americas\Transportation\60269938 Circle\Phase_II\000_CAD\008_Structural\Sign Structures\62A76 Sign Structure\62A76-Span-55329-Exist Plans
12:41:00 PM

FOR INFORMATION ONLY

FEDERAL AID ROUTE NO.	SECTION	COUNTY	TOTAL SHEETS	SHEET NO.
90/94	*	COOK	88	62
STA.		TO STA.		
FED. ROAD DIST. NO.	ILLINOIS	FED. AID PROJECT		

* 1985 - 077 B-R

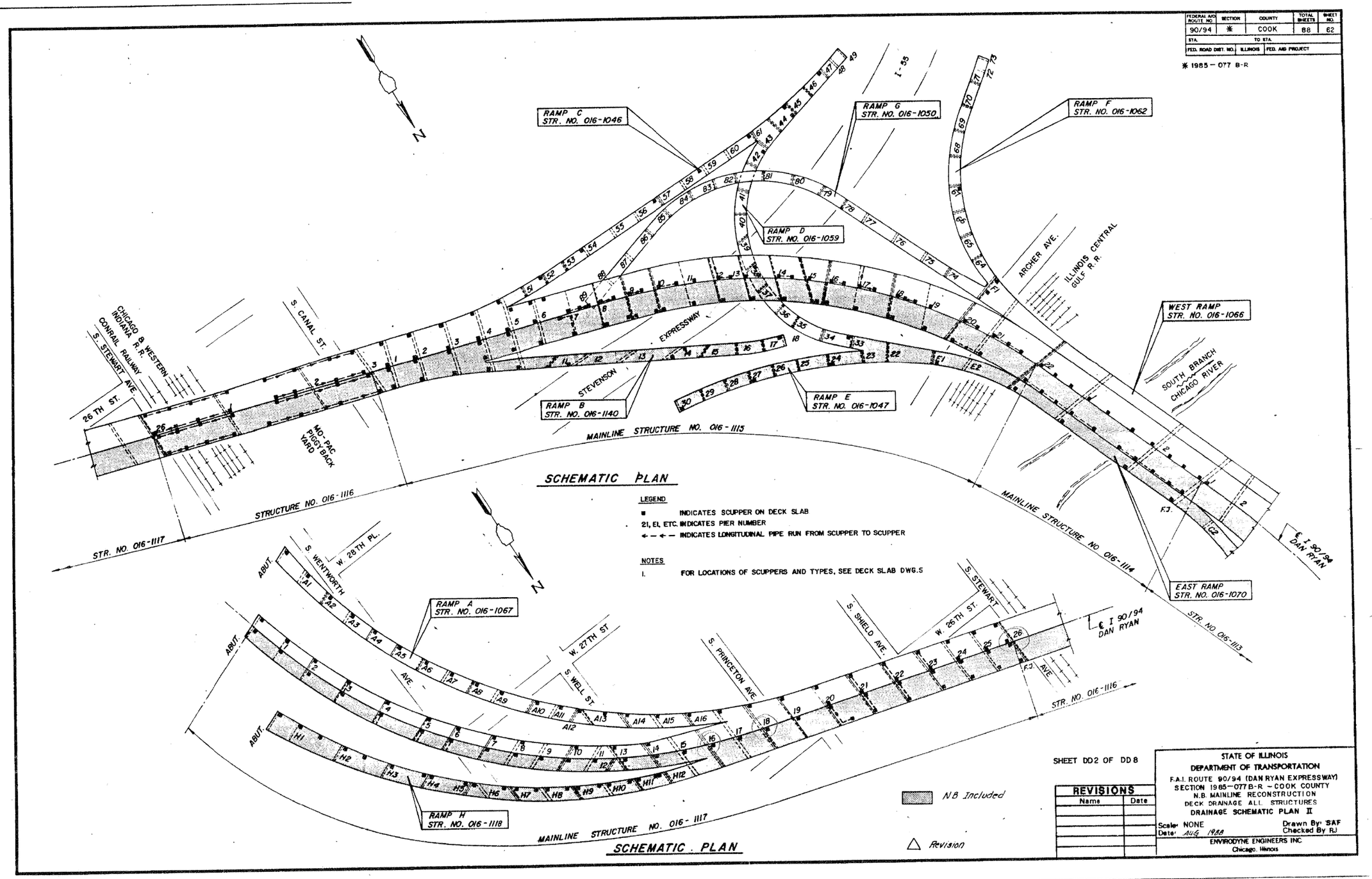

SCHEMATIC PLAN

LEGEND

■ INDICATES SCUPPER ON DECK SLAB

21, E1, ETC. INDICATES PIER NUMBER

←–←– INDICATES LONGITUDINAL PIPE RUN FROM SCUPPER TO SCUPPER

NOTES

1. FOR LOCATIONS OF SCUPPERS AND TYPES, SEE DECK SLAB DWG.S

N.B Included

△ Revision

SCHEMATIC . PLAN

SHEET DD2 OF DD8

REVISIONS	
Name	Date

STATE OF ILLINOIS
DEPARTMENT OF TRANSPORTATION
F.A.I. ROUTE 90/94 (DAN RYAN EXPRESSWAY)
SECTION 1985-077 B-R - COOK COUNTY
N.B. MAINLINE RECONSTRUCTION
DECK DRAINAGE ALL STRUCTURES
DRAINAGE SCHEMATIC PLAN II

Scale: NONE
Date: AUG 1988
Drawn By: SAF
Checked By: RJ

ENVIRODYNE ENGINEERS INC
Chicago, Illinois

HBM ENGINEERING GROUP, LLC

USER NAME = francisco.lopez	DESIGNED - JMI	REVISED -	STATE OF ILLINOIS DEPARTMENT OF TRANSPORTATION	EXISTING RECORD DRAWINGS STRUCTURE NO. 016-1111
	CHECKED - MAI, JJS	REVISED -		
PLOT SCALE = N.T.S	DRAWN - JMI	REVISED -		
PLOT DATE = 1/24/2020	CHECKED - MAI, JJS	REVISED -		SHEET NO.AS12-35 OF AS12-49SHEETS

F.A.I. RTE.	SECTION	COUNTY	TOTAL SHEETS	SHEET NO.
90/94/290	2015-019R	COOK	2155	1472
		CONTRACT NO. 62A76		
	ILLINOIS	FED. AID PROJECT		

FILE NAME: pw:\\AECOM-NA-AWS1.aecomonline.local\AECOM_DS02_NA\Documents\01 Americas\Transportation\60269938 Circle\Phase_II\000_CAD\008_Structural\Sign Structures\62A76 Sign Structure\62A76-Span-55329-Exist Plans

12:41:05 PM

FOR INFORMATION ONLY

FEDERAL AID ROUTE NO.	SECTION	COUNTY	TOTAL SHEETS	SHEET NO.
90/94	*	COOK	88	63
STA.		TO STA.		
FED. RD. DIST. NO.	ILLINOIS	FED. AID PROJECT		

* 1985-077 B-R

TYPE IA

TYPE IB

TYPE IC

TYPE ID

TYPE IE

TYPE IIA

TYPE IIB

TYPE IIC

TYPE IID

TYPE IIE

TYPE IIIA

TYPE IIIB

TYPE IIIC

TYPE IVE

TYPE IVF

TYPE IVA

TYPE IVB

TYPE IVC

TYPE IVD

TYPE IVG

TYPE RA

TYPE RB

TYPE RC

TYPE RD

TYPE RE

TYPE RF

DOWNSPOUTS AT PIER ELEVATIONS

Mainline Looking Upstation

Ramps Looking Upstation

Note 1:
For Downspout at near side or far side of Pier see drainage schematic plans.

(*) FINGER JOINT - FOR DRAINAGE DETAILS SEE SHT. DD7

△ STEEL PIER SEE FIGURES ON SHT. DD4

STR. NO.	PIER NO.	TYPE FIGURE
0137 ML	7	IV A
	9	IV D
	11	IV B
	13	IV D
	15	IV B
	16	IV D
	19	IV B
	21	IV D
	23	IV B
	(*) 1	IV F
1110 ML	(*) 4	IV F
RAMPS	D1	R A
	E1	R A
1111 ML	1	II A
	(*) 2	II C
	3	II C
	4	IV C
	5	II C
	6	IV C
	(*) 7	II C
	8	I E
	9	IV C
	10	IV C
	11	IV C
1111 RAMPS	D7	RC
	D9	RC
	D10	RC
	E5	RC
	E8	RC
	E10	RC
	11	I D
	12	II B
	13	I D
	14	II B
	16	II E
	17	II F
	19	IV C
	20	I E
	21	II D
	22	IV C
	23	I C
	24	II A
	25	I E
	26	II A
	27	R C
	28	I E
	29	II A
	30	II A
	31	II A
1112 RAMPS	A11	RD
	A12	RD
	A15	R D
	A16	R C
	A19	R C
	A21	R C
	A24	R A
	A26	R A
	B12	RD
	B13	RD
	B14	RD
	B17	RB
	C15	RC
	C17	RC
	C19	R E
	C20	RD
	D14	RD
	D12	RD
	D9	RD
1113 ML	2	I B
	3	II B
	4	I B
	5	II B
	6	I B
	7	II B
	8	II B
	9	I B
	10	I A
1113 RAMPS	A5	RD
	A7	RD
	A9	RD
	A10	RB
	C3	RD
	C5	RD
	C7	RD
	C10	RD
	(*) 1	III G
	22	II G
1114 ML	See E. Ramp Sht. DD4 for Pier 1	
RAMPS	E1	RB
1115 ML	△ 11	I B
	△ 12	II H
	△ 18	I B
	△ 19	I B
	15	II D
	16	II C
	△ 17	I B
	18	II C
	△ 19	I A
	20	II C
	21	I D
1116 ML	3	IV F
1117 ML	△ 1	III C
	△ 2	I G
	△ 3	I D
	△ 4	I F
	△ 5	I D
	△ 6	I E
1118 RAMPS	△ 7	II E
	8	III C
	9	I C
	10	III C
	11	I C
	12	I C
	13	III C
	14	III C
	15	I E
	16	I C
	17	III C
	18	III C
	△ 19	I E
	△ 20	I F
	△ 21	I D
	△ 22	I A
	△ 23	I D
	24	IV C
	25	IV C
	(*) 26	IV F
	△ 11	5A
	△ 12	5B
	△ 13	5A
	△ 14	5C
	15	RB
	17	RB
	18	RB
1118 RAMPS	H9	RB
	H10	RB
	H11	RB
	H12	RA
	A1	RC
	A2	RC
	A3	RC
	A4	RC
	A5	RC
	A6	RC
	A7	RC
	A8	RC
	A9	RC
	A10	RC
	A11	RC
	A12	RC
	A14	RC
	A15	RC
	A16	RC
1140 RAMP B	12	RD
	14	RF
	11	RC
1056 RAMP C	61	RC
	59	RC
	57	RC
	54	RC
	52	RC
1057 RAMPS	47	RC
	45	RF
1059 RAMP D	43	RD
	38	RD
	33	RD
1047 RAMP E	27	RD
	E1	RD
	30	RD
	24	RD

SECTION F-F

SECTION A-A

SECTION D-D

SECTION B-B

SECTION E-E

SECTION C-C

NOTES:
For longitudinal run and details, see sheet DD5 & DD8.
For steel Pier and Details See Sht. DD4

SHEET DD3 OF DD8

REVISIONS	
Name	Date

STATE OF ILLINOIS
DEPARTMENT OF TRANSPORTATION
F.A.I. ROUTE 90/94 (DAN RYAN EXPRESSWAY)
SECTION 1985-077 B-R-COOK COUNTRY
N.B. MAINLINE RECONSTRUCTION
DECK DRAINAGE — ALL STRUCTURES
DOWNSPOUTS AT CONCRETE PIER

Scale: NONE
Date: Aug. 1988
Drawn By: S.A.F.
Checked By: R.J.

ENVIRODYNE ENGINEERS INC.
Chicago, Illinois

HBM ENGINEERING GROUP, LLC

USER NAME = francisco.lopez	DESIGNED - JMI	REVISED -	STATE OF ILLINOIS DEPARTMENT OF TRANSPORTATION	EXISTING RECORD DRAWINGS STRUCTURE NO. 016-1111	
	CHECKED - MAI, JJS	REVISED -			
PLOT SCALE = N.T.S	DRAWN - JMI	REVISED -			
PLOT DATE = 1/24/2020	CHECKED - MAI, JJS	REVISED -		SHEET NO.AS12-36 OF AS12-49SHEETS	

F.A.I. RTE.	SECTION	COUNTY	TOTAL SHEETS	SHEET NO.
90/94/290	2015-019R	COOK	2155	1473
			CONTRACT NO. 62A76	
		ILLINOIS	FED. AID PROJECT	

FILE NAME: pw:\\AECOM-NA-AWS1.aecomonline.local:AECOM_D502_NA\Documents\01 Americas\Transportation\60269938 Circle\Phase_II\000_CAD\008_Structural\Sign Structures\62A76 Sign Structure\62A76-Span-SS329-Exist Plans

12:41:10 PM

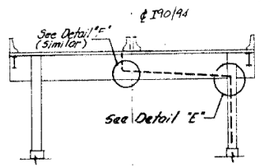

FIGURE IA

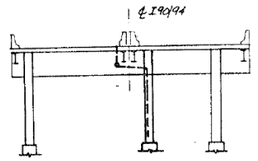

FIGURE IB

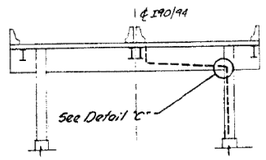

FIGURE IC

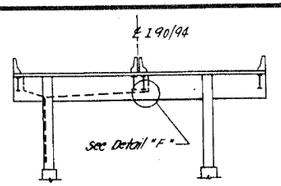

FIGURE ID

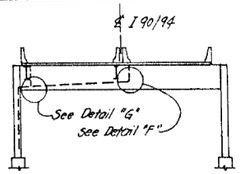

FIGURE IF

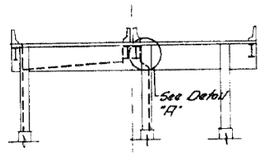

FIGURE IIA

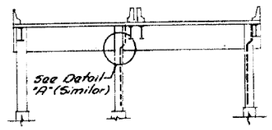

FIGURE IIB

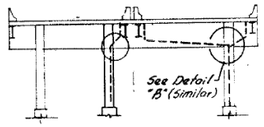

FIGURE IIC

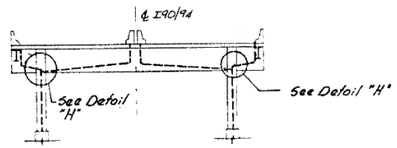

FIGURE II D

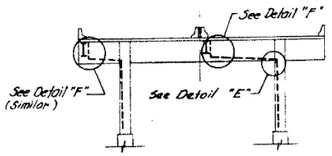

FIGURE II E

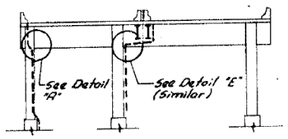

FIGURE II F

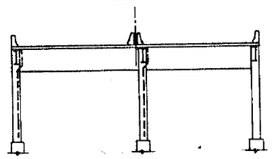
FIGURE II G

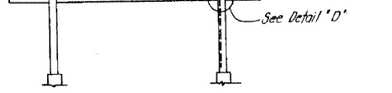

FIGURE II H

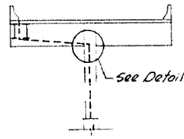

FIGURE SD

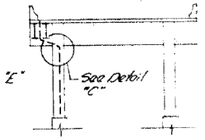

FIGURE SA

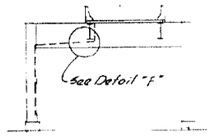

FIGURE SB

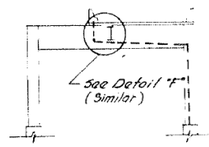

FIGURE SC

DOWNSPOUTS AT STEEL PIER ELEVATIONS
MAINLINE LOOKING UPSTATION

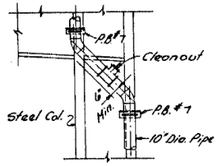

DETAIL "A"

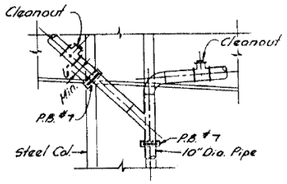

DETAIL "B"

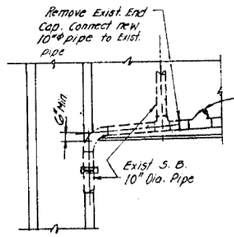

DETAIL "G"

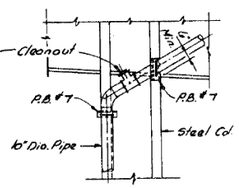

DETAIL "C"

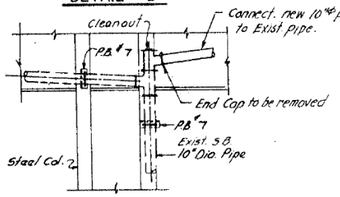

DETAIL "D"

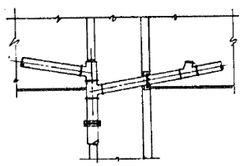
DETAIL "H"

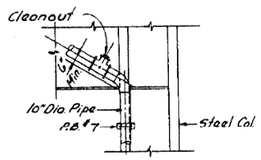

DETAIL "E"

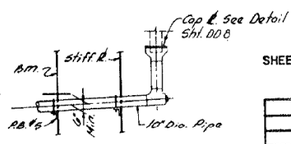

DETAIL "F"

DOWNSPOUTS AT STEEL PIER ELEVATIONS
RAMPS LOOKING UPSTATION

NOTES:
- For Pipe Bracket (P.B.) Details see Typical Detail Sht. DD8.
- For Longitudinal Runs see Shts. DD5 & DD8.
- Minimum slope on any run of pipe shall be 3/16" / ft. unless noted.

FEDERAL AID ROUTE NO.	SECTION	COUNTY	TOTAL SHEETS	SHEET NO.
90/94	M	COOK	88	64
STA.		TO STA.		
FED. RD. DIST. NO.	ILLINOIS	FED. AID PROJECT		

M-1985-077 B-R

SHEET DD 4 OF DD8

REVISIONS	
Name	Date

STATE OF ILLINOIS
DEPARTMENT OF TRANSPORTATION
F.A.I. ROUTE 90/94 (DAN RYAN EXPRESSWAY)
SECTION 1985-077 B-R - COOK COUNTY
N.B. MAINLINE RECONSTRUCTION
DECK DRAINAGE - ALL STRUCTURES
DOWNSPOUTS AT STEEL PIER

Scale: NONE
Date: August 1988
Drawn By: SAF
Checked By: RJ

ENVIRODYNE ENGINEERS INC.
Chicago, Illinois

FILE NAME: pw:\AECOM-NA-AWS1.aecomonline.local\AECOM_DS02_NA\Documents\01 AmericasTransportation\60269938 Circle\Phase_II\000_CAD\008_StructuralFiles\Sign Structures\62A76 Sign Structure\62A76-Span-55329-Exist Plans

HBM ENGINEERING GROUP, LLC	USER NAME = francisco.lopez	DESIGNED - JMI	REVISED -	STATE OF ILLINOIS DEPARTMENT OF TRANSPORTATION	EXISTING RECORD DRAWINGS STRUCTURE NO. 016-1111
		CHECKED - MAI, JJS	REVISED -		
	PLOT SCALE = N.T.S	DRAWN - JMI	REVISED -		
	PLOT DATE = 1/24/2020	CHECKED - MAI, JJS	REVISED -		SHEET NO.AS12-37 OF AS12-49SHEETS

F.A.I. RTE.	SECTION	COUNTY	TOTAL SHEETS	SHEET NO.
90/94/290	2015-019R	COOK	2155	1474
		CONTRACT NO. 62A76		
	ILLINOIS	FED. AID PROJECT		

12:41:15 PM

FOR INFORMATION ONLY

FEDERAL AID ROUTE NO.	SECTION	COUNTY	TOTAL SHEETS	SHEET NO.
90/94	*	COOK	88	65
STA.		TO STA.		
FED. RD. DIST. NO.	ILLINOIS	FED. AID PROJECT		

* 1985-077 B-R

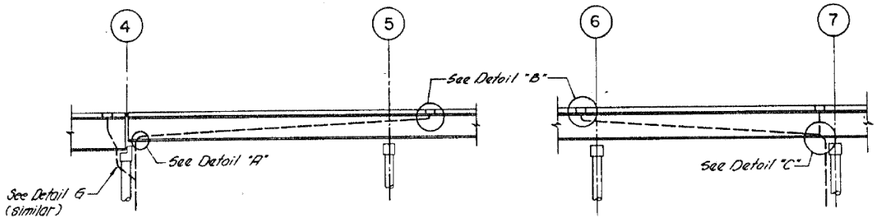

AT SPAN 4 (STR. # 1110)

AT SPAN 6 (STR. # 1110)

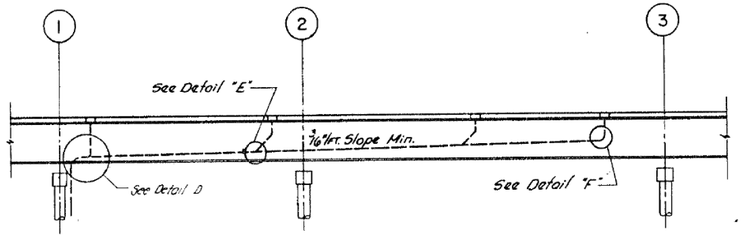

AT SPANS 1 & 2 (STR. # 1110)

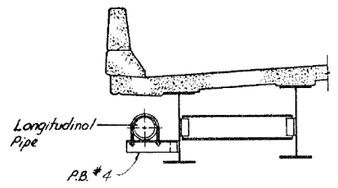

SECTION THRU DIAPHRAGM

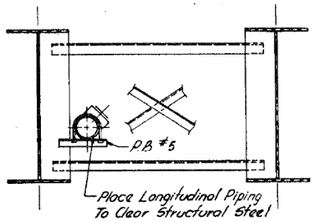

SECTION THRU CROSS FRAME

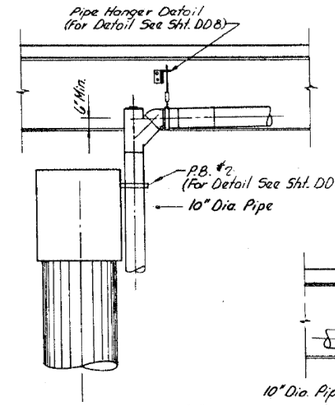

DETAIL "A"

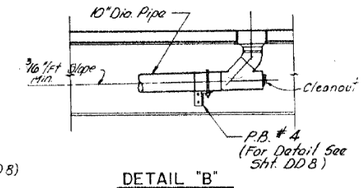

DETAIL "B"
(For Rolled Beam)

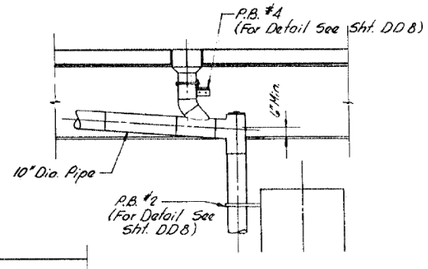

DETAIL "C"

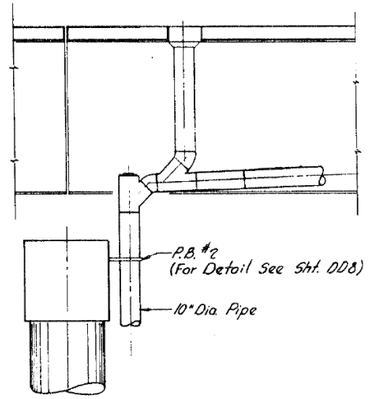

DETAIL "D"

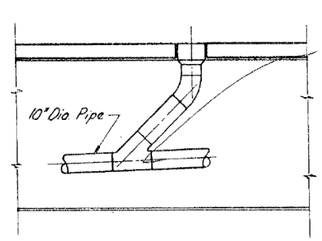

DETAIL "E"

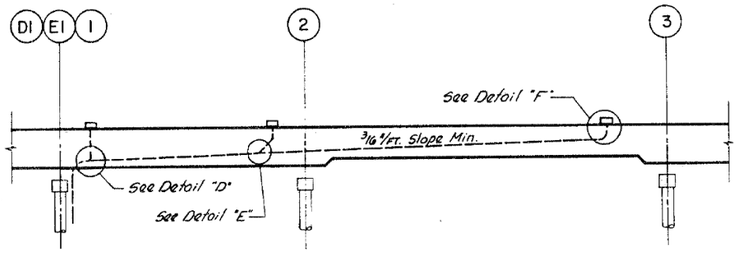

AT SPANS DI & EI (STR. # 1110)

LONGITUDINAL RUN ELEVATION

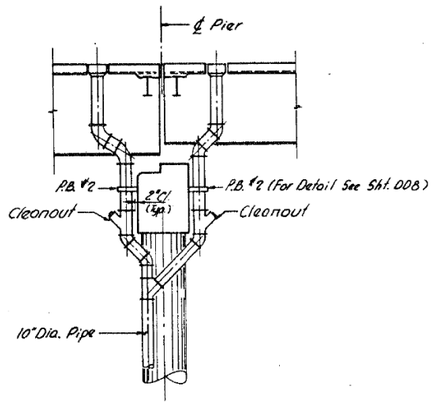

DETAIL "G"

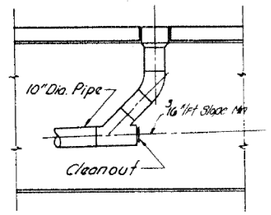

DETAIL "F"
(For Welded R. Girder)

NOTES:

For Pipe Bracket not shown in Details, the Contractor may use Pipe Bracket as shown in Sht. DD8, or any other Pipe Bracket subject to Approval by Engineer.

All Longitudinal Runs of piping to be supported at Max. Spacing 8'-0" C/C.

SHEET DD 5 OF DD 8

REVISIONS	
Name	Date

STATE OF ILLINOIS
DEPARTMENT OF TRANSPORTATION
F.A.I. ROUTE 90/94 (DAN RYAN EXPRESSWAY)
SECTION 1985-077 B-R - COOK COUNTY
N.B. MAINLINE RECONSTRUCTION
DECK DRAINAGE - ALL STRUCTURES
LONGITUDINAL RUN & DETAILS — I

Scale: NONE — Drawn By: L.L.
Date: August 1988 — Checked By: R.J.

ENVIRODYNE ENGINEERS INC.
Chicago, Illinois

FILE NAME: pw:\\AECOM-NA-AWS1.aecomonline.local\AECOM_D502_NA\Documents\01 Americas\Transportation\60269938 Circle\Phase_II\000_CAD\008_Structural\Sign Structures\62A76 Sign Structure\62A76-Span-55329-Exist Plans
12:41:21 PM

HBM ENGINEERING GROUP, LLC	USER NAME = francisco.lopez	DESIGNED - JMI	REVISED -	STATE OF ILLINOIS DEPARTMENT OF TRANSPORTATION
		CHECKED - MAI, JJS	REVISED -	
	PLOT SCALE = N.T.S	DRAWN - JMI	REVISED -	
	PLOT DATE = 1/24/2020	CHECKED - MAI, JJS	REVISED -	

EXISTING RECORD DRAWINGS
STRUCTURE NO. 016-1111
SHEET NO.AS12-38 OF AS12-49SHEETS

F.A.I. RTE.	SECTION	COUNTY	TOTAL SHEETS	SHEET NO.
90/94/290	2015-019R	COOK	2155	1475
		CONTRACT NO. 62A76		
	ILLINOIS	FED. AID PROJECT		

FOR INFORMATION ONLY

FEDERAL AID ROUTE NO.	SECTION	COUNTY	TOTAL SHEETS	SHEET NO.
90/94	*	COOK	66	66
STA.		TO STA.		
FED. RD. DIST. NO.	ILLINOIS	FED. AID PROJECT		

* 1985-077 B-R

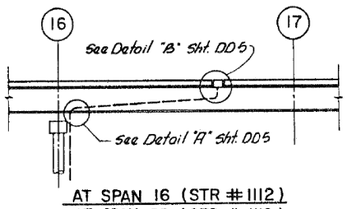

AT SPAN 16 (STR # 1112)
AT SPAN 25 (STR # 1112)

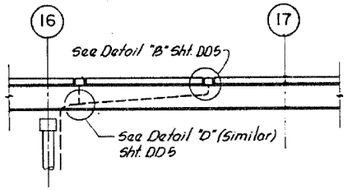

AT SPAN 26 (STR # 1112)

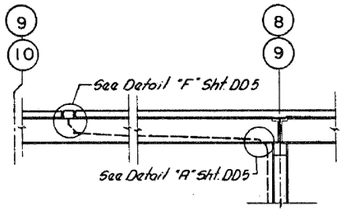

AT SPAN 8 & 9 (STR # 1115)

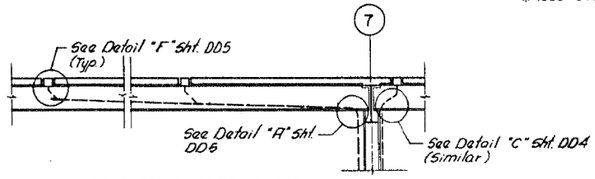

AT SPAN 7 (STR # 1115)

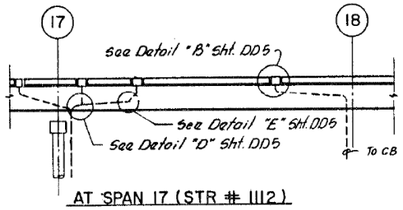

AT SPAN 17 (STR # 1112)

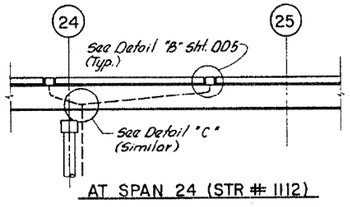

AT SPAN 24 (STR # 1112)

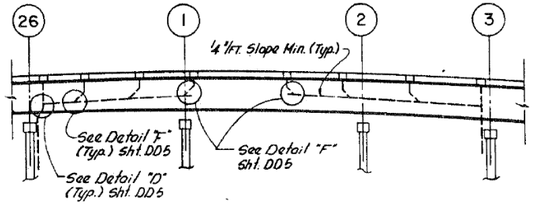

AT SPAN 26 & 2 (STR # 1116)

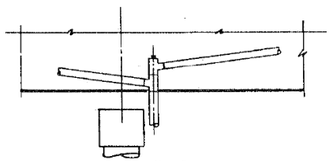

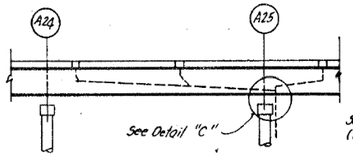

AT SPAN A24 (STR. # 1112)

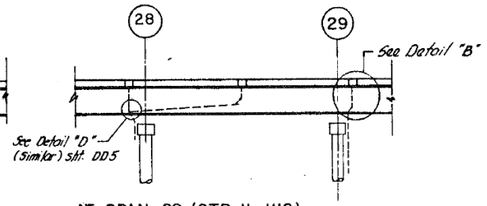

AT SPAN 28 (STR # 1112)

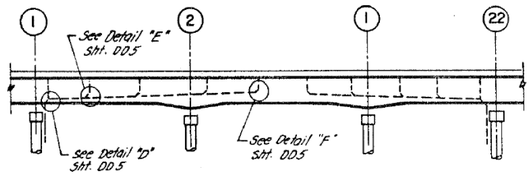

AT SPAN 22 (STR. # 1114)

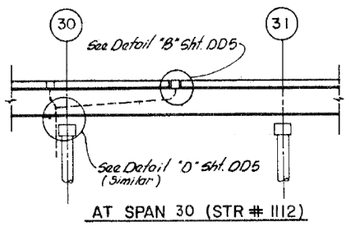

AT SPAN 30 (STR # 1112)

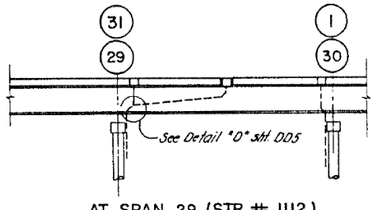

AT SPAN 29 (STR # 1112)
AT SPAN 31 (STR # 1112)

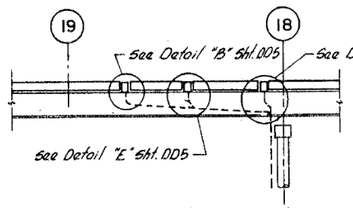

AT SPAN 18 (STR # 1115)

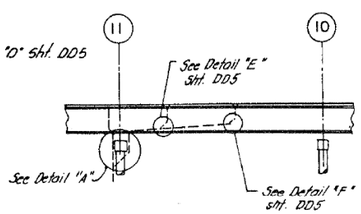

AT SPAN 10 (STR. # 1113)

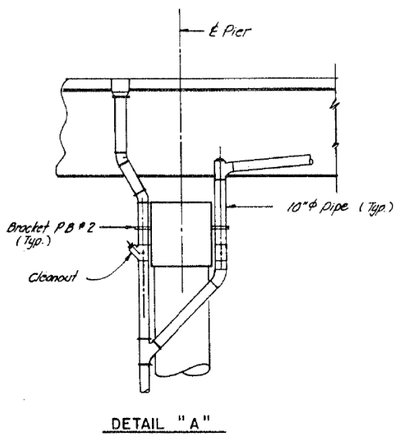

DETAIL "A"

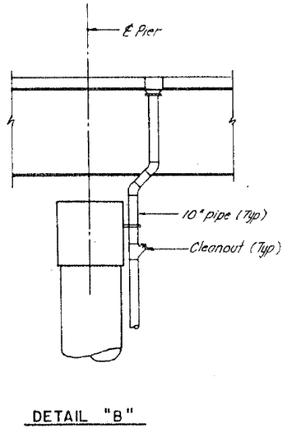

DETAIL "B"

NOTES:
1. For Details not shown see Sht. DD5.
2. For Pipe Bracket see Typical Details sht. DD8.
3. Minimum slope on any run of Pipe shall be 3/16"/Ft. unless noted.

SHEET DD 6 OF DD 8

REVISIONS	
Name	Date

STATE OF ILLINOIS
DEPARTMENT OF TRANSPORTATION
F.A.I. ROUTE 90/94 (DAN RYAN EXPRESSWAY)
SECTION 1985-077 B-R-- COOK COUNTY
N.B. MAINLINE RECONSTRUCTION
DECK DRAINAGE--ALL STRUCTURES
LONGITUDINAL RUN & DETAILS--II
Scale: NONE Drawn By: L.L.
Date: August 1988 Checked By: R.J.
ENVIRODYNE ENGINEERS INC.
Chicago, Illinois

HBM ENGINEERING GROUP, LLC				
USER NAME = francisco.lopez	DESIGNED - JMI	REVISED -	STATE OF ILLINOIS DEPARTMENT OF TRANSPORTATION	EXISTING RECORD DRAWINGS STRUCTURE NO. 016-1111
	CHECKED - MAI, JJS	REVISED -		
PLOT SCALE = N.T.S	DRAWN - JMI	REVISED -		
PLOT DATE = 1/24/2020	CHECKED - MAI, JJS	REVISED -		SHEET NO.AS12-39 OF AS12-49SHEETS

F.A.I. RTE.	SECTION	COUNTY	TOTAL SHEETS	SHEET NO.
90/94/290	2015-019R	COOK	2155	1476
			CONTRACT NO. 62A76	
		ILLINOIS	FED. AID PROJECT	

FILE NAME: pw:\AECOM-NA-AWS1.aecomonline.local:AECOM_DS02_NAIDocuments\01 Americas\Transportation\60269938 Circle\Phase_II\000_CAD\008_Structural\Sign Structures\62A76 Sign Structure\62A76-Span-55329-Exist Plans

12:41:26 PM

FOR INFORMATION ONLY

FEDERAL AID ROUTE NO.	SECTION	COUNTY	TOTAL SHEETS	SHEET NO.
90/94	*	COOK	88	67
STA.		TO STA.		
FED. RD. DIST. NO.	ILLINOIS	FED. AID PROJECT		

* 1985-077 B-R

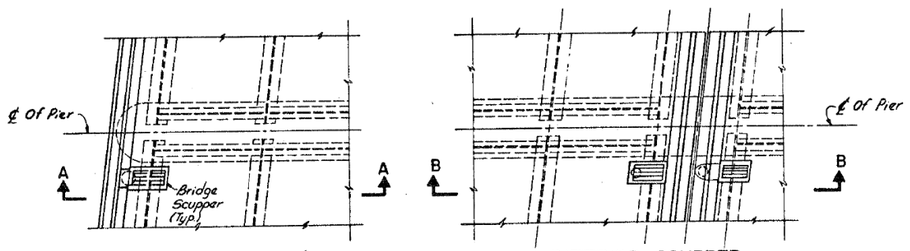

EXTERIOR SCUPPER

INTERIOR SCUPPER

TYPICAL PART PLAN OF SCUPPERS AT CONCRETE PIERS

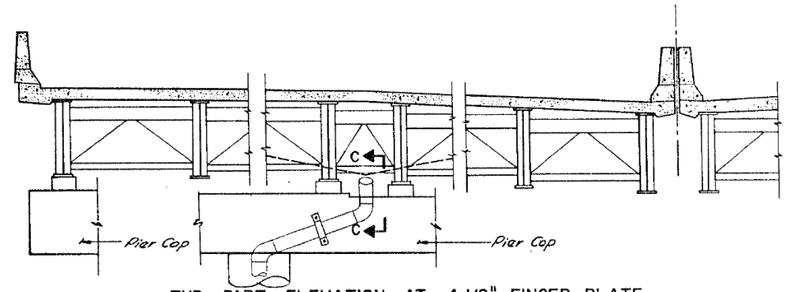

TYP. PART ELEVATION AT 4 1/2" FINGER PLATE EXPANSION JOINTS

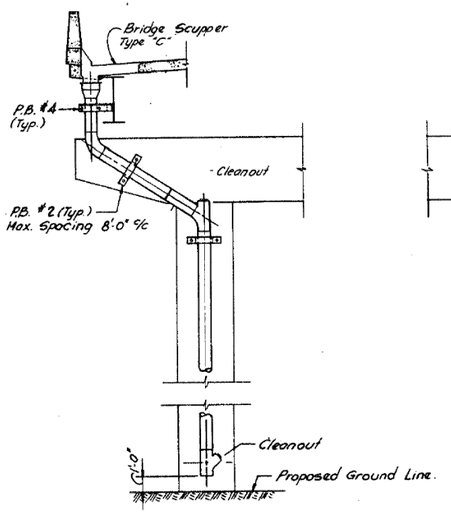

SECTION A-A

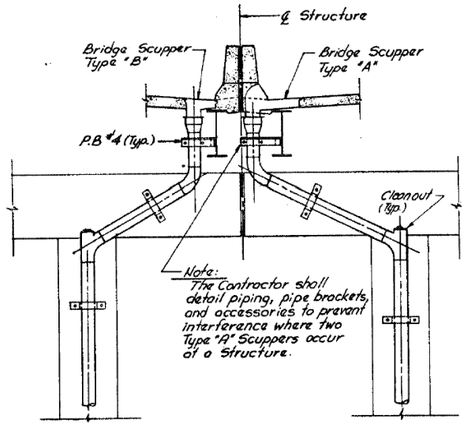

SECTION B-B

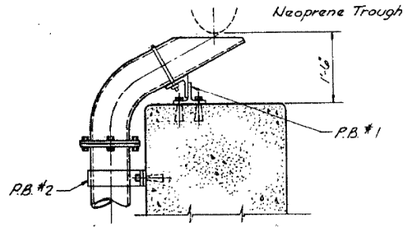

SECTION C-C

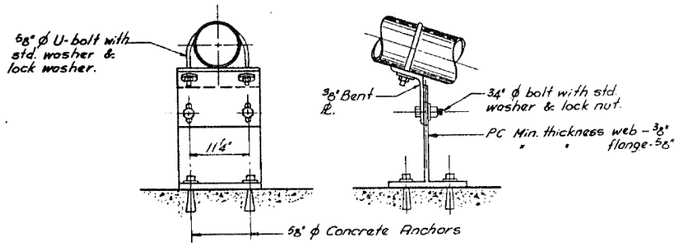

DETAIL OF PIPE SUPPORT P.B. #1

Notes:

1) Bridge Drainage Piping and fittings shall be Reinforced Fiberglass (Unless Noted), See Special Provisions.
2) See Drainage Contract Plans for location of catch basins, manholes, storm sewers etc.
3) Cleanouts - 10" ø Tee with blind flange or 5" ø Plug.
4) All elbows shall be long radius.
5) For Pipe Bracket (P.B.) Details not shown See Sht. DD 8.

SHEET DD 7 OF DD8

REVISIONS	
Name	Date

STATE OF ILLINOIS
DEPARTMENT OF TRANSPORTATION
F.A.I. ROUTE 90/94 (DAN RYAN EXPRESSWAY)
SECTION 1985-077 B-R - COOK COUNTY
N.B. MAINLINE RECONSTRUCTION
DECK DRAINAGE - ALL STRUCTURES
TYPICAL DETAILS AND SECTIONS

Scale : NONE
Date : August 1988
Drawn By: L.L.
Checked By: W.L.B.

ENVIRODYNE ENGINEERS INC.
Chicago, Illinois

FILE NAME: pw:\AECOM-NA-AWS1.aecomonline.local\AECOM_DS02_NA\Documents\01 Americas\Transportation\602699938 Circle\Phase_II\000_CAD\008_Structural\Sign Structures\62A76 Sign Structure\62A76-Span-55329-Exist Plans
12:41:31 PM

HBM ENGINEERING GROUP, LLC

USER NAME = francisco.lopez	DESIGNED - JMI	REVISED -
	CHECKED - MAI, JJS	REVISED -
PLOT SCALE = N.T.S	DRAWN - JMI	REVISED -
PLOT DATE = 1/24/2020	CHECKED - MAI, JJS	REVISED -

STATE OF ILLINOIS
DEPARTMENT OF TRANSPORTATION

EXISTING RECORD DRAWINGS
STRUCTURE NO. 016-1111
SHEET NO.AS12-40 OF AS12-49SHEETS

F.A.I. RTE.	SECTION	COUNTY	TOTAL SHEETS	SHEET NO.
90/94/290	2015-019R	COOK	2155	1477
		CONTRACT NO. 62A76		
	ILLINOIS	FED. AID PROJECT		

FEDERAL AID ROUTE NO.	SECTION	COUNTY	TOTAL SHEETS	SHEET NO.
90/94	*	COOK	88	68
STA.	TO STA.			
FED. RD. DIST. NO.	ILLINOIS	FED. AID PROJECT		

* 1985-077 B-R

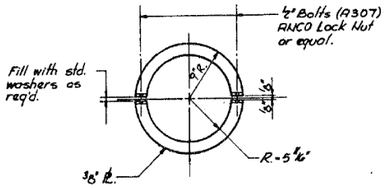

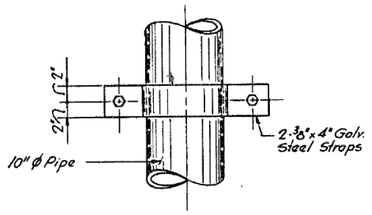

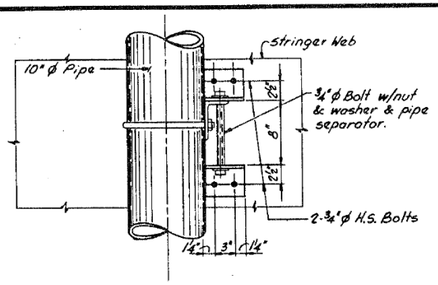

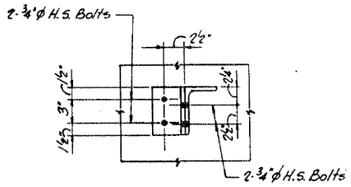

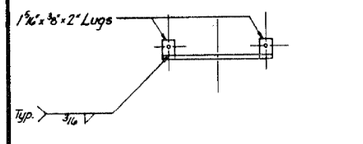

CAP PLATE DETAIL
Scale: 11/2" = 1'-0"

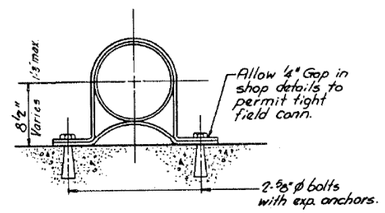

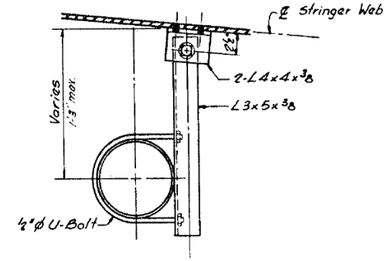

BRACKET P.B. # 3
(FOR EXPANSION SEE NOTE 1.)

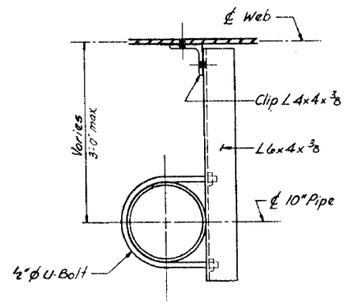

BRACKET P.B. # 4
(TO WEB)

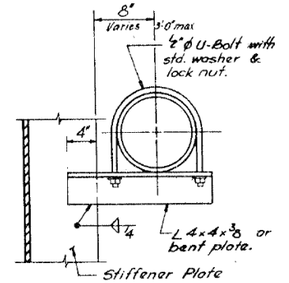

BRACKET P.B. # 5
(TO STIFFENER)

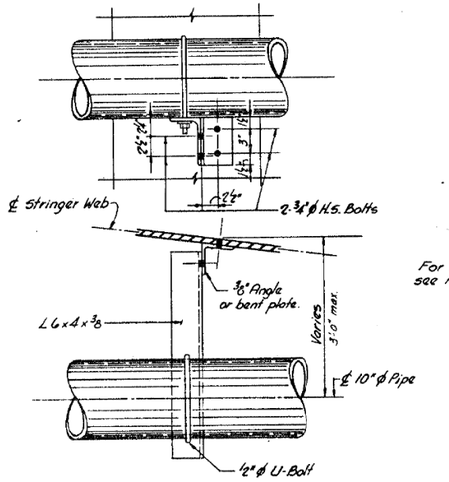

BRACKET P.B. # 6

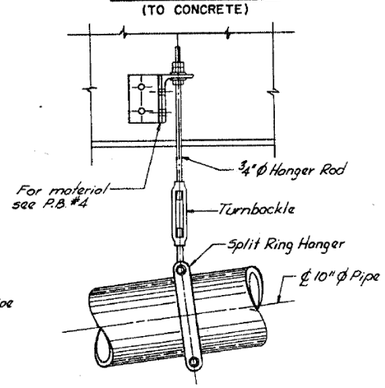

PIPE HANGER DETAIL

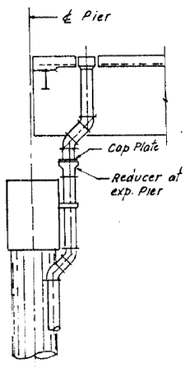

TYPICAL EXPANSION PIER

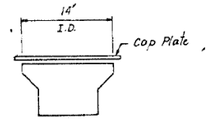

REDUCER

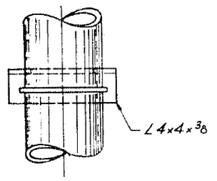

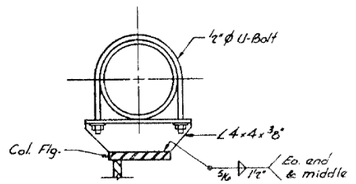

BRACKET P.B. # 7

Note:
1.1 Adjacent to Preformed Expansion Joints when combining two bridge scuppers to one manhole or catch basin.

SHEET DD 8 OF DD 8

REVISIONS	
Name	Date

STATE OF ILLINOIS
DEPARTMENT OF TRANSPORTATION
F.A.I. ROUTE 90/94 (DAN RYAN EXPRESSWAY)
SECTION 1985-077 B-R - COOK COUNTY
N.B. MAINLINE RECONSTRUCTION
DECK DRAINAGE - ALL STRUCTURES
TYPICAL DETAILS

Scale: NONE
Date: August 1988
Drawn By: L.L.
Checked By: W.L.B.

ENVIRODYNE ENGINEERS INC.
Chicago, Illinois

HBM ENGINEERING GROUP, LLC	USER NAME = francisco.lopez	DESIGNED - JMI	REVISED -	STATE OF ILLINOIS DEPARTMENT OF TRANSPORTATION	EXISTING RECORD DRAWINGS STRUCTURE NO. 016-1111
		CHECKED - MAI, JJS	REVISED -		
	PLOT SCALE = N.T.S	DRAWN - JMI	REVISED -		
	PLOT DATE = 1/24/2020	CHECKED - MAI, JJS	REVISED -		SHEET NO. AS12-41 OF AS12-49 SHEETS

F.A.I. RTE.	SECTION	COUNTY	TOTAL SHEETS	SHEET NO.
90/94/290	2015-019R	COOK	2155	1478
			CONTRACT NO. 62A76	
		ILLINOIS	FED. AID PROJECT	

FILE NAME: pw:\AECOM-NA-AWS1.aecomonline.local:AECOM_DS02_NAIDocuments\01 Americas\Transportation\60269938 Circle\Phase_II\000_CAD\008_Structural\Sign Structures\62A76 Sign Structure\62A76-Span-55329-Exist Plans
12:41:36 PM

FOR INFORMATION ONLY

FEDERAL AID ROUTE NO.	SECTION	COUNTY	TOTAL SHEETS	SHEET NO.
90/94	*	COOK	88	72
STA.		TO STA.		
FED. RD. DIST. NO.	ILLINOIS	FED. AID PROJECT		

* 1985-077 B-R

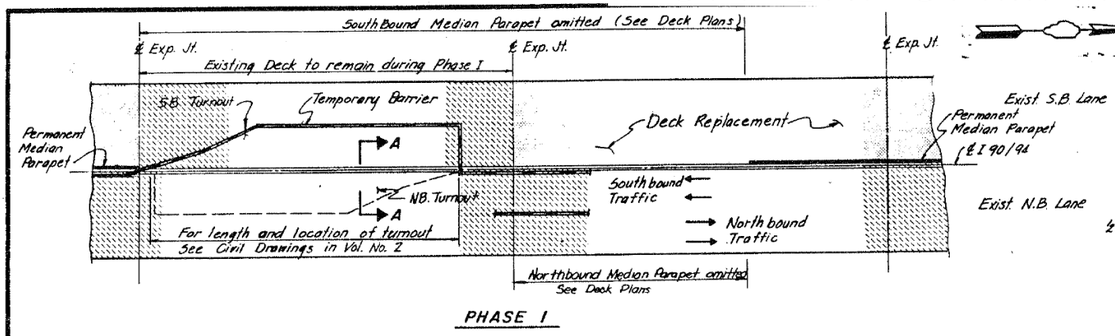

PHASE I

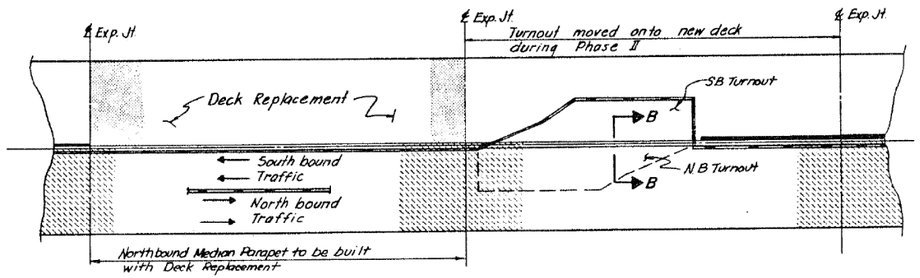

PHASE II

TYPICAL TURNOUT

S.B. MAINLINE RECONSTR. AS SHOWN
N.B. MAINLINE RECONSTR. SIMILAR

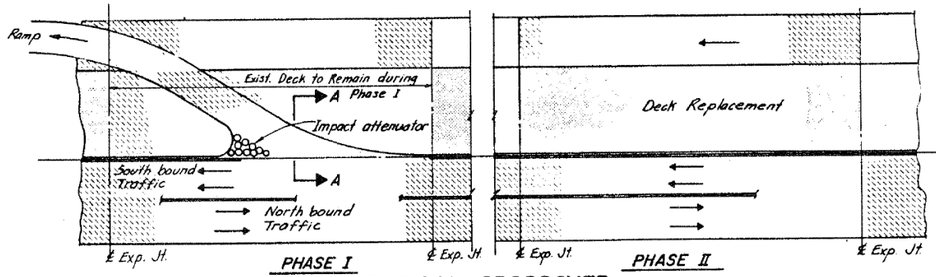

TYPICAL CROSSOVER

Note : Any cutting of steel plates required to match the curvature of the roadway is incidental to the bid item " Temporary Turnouts and Crossovers "

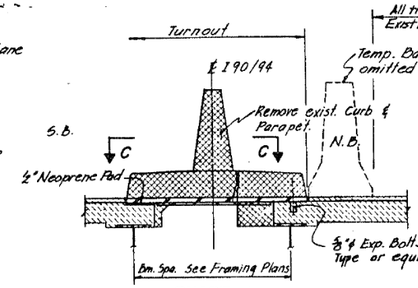

PHASE I
S.B. ML. RECONSTR.

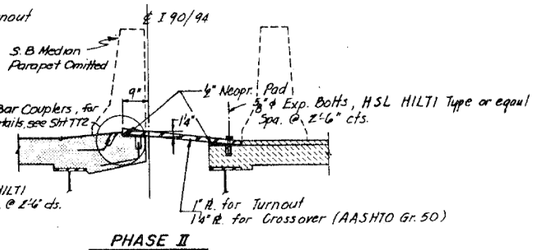

PHASE II
S.B. ML. RECONSTR.

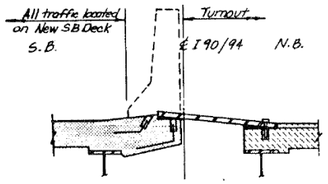

PHASE I
N.B. ML. RECONSTR.

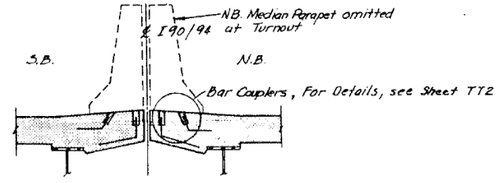

PHASE II
N.B. ML. RECONSTR.

SECTION A-A

SECTION B-B

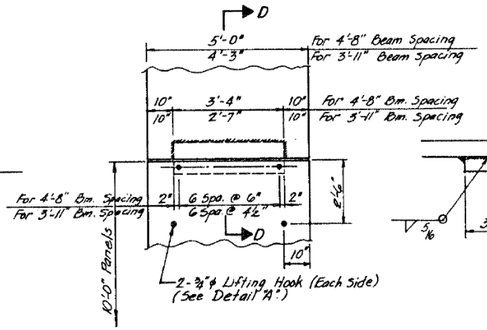

SECTION C-C

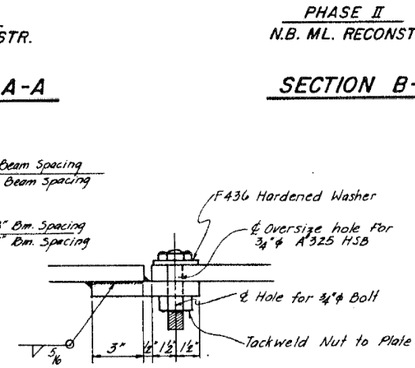

SECTION D-D

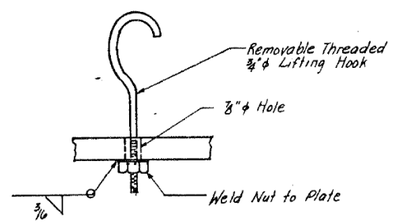

DETAIL "A"

LEGEND
- Existing Concrete to be removed
- Existing Deck
- Deck Replacement

SHEET TT1 OF 2

REVISIONS	
Name	Date

STATE OF ILLINOIS
DEPARTMENT OF TRANSPORTATION
F.A.I. ROUTE 90/94 (DAN RYAN EXPRESSWAY)
SECTION 1985-077B-R-COOK COUNTY
N.B. MAINLINE RECONSTRUCTION
TEMPORARY TURNOUT AND CROSSOVERS
Scale : NONE
Date : AUGUST, 1988
Drawn By: DC
Checked By: AW
ENVIRODYNE ENGINEERS INC.
Chicago, Illinois

FILE NAME: pw:\\AECOM-NA-AWS1.aecomonline.local:AECOM_DS02_NA\Documents\01 Americas\Transportation\60269938 Circle\Phase_II\000_CAD\008_Structural\Sign Structures\62A76 Sign Structure\62A76-Span-SS329-Exist Plans
12:41:41 PM

HBM ENGINEERING GROUP, LLC

USER NAME = francisco.lopez	DESIGNED - JMI	REVISED -
	CHECKED - MAI, JJS	REVISED -
PLOT SCALE = N.T.S	DRAWN - JMI	REVISED -
PLOT DATE = 1/24/2020	CHECKED - MAI, JJS	REVISED -

STATE OF ILLINOIS
DEPARTMENT OF TRANSPORTATION

EXISTING RECORD DRAWINGS
STRUCTURE NO. 016-1111
SHEET NO.AS12-42 OF AS12-49SHEETS

F.A.I. RTE.	SECTION	COUNTY	TOTAL SHEETS	SHEET NO.
90/94/290	2015-019R	COOK	2155	1479
		CONTRACT NO. 62A76		
	ILLINOIS	FED. AID PROJECT		

FOR INFORMATION ONLY

FEDERAL AID ROUTE NO.	SECTION	COUNTY	TOTAL SHEETS	SHEET NO.
90/94	tr	COOK	88	73
STA.		TO STA.		
FED. RD. DIST. NO.	ILLINOIS	FED. AID PROJECT		

x 1985-077 B-R

STATE OF ILLINOIS
DEPARTMENT OF TRANSPORTATION

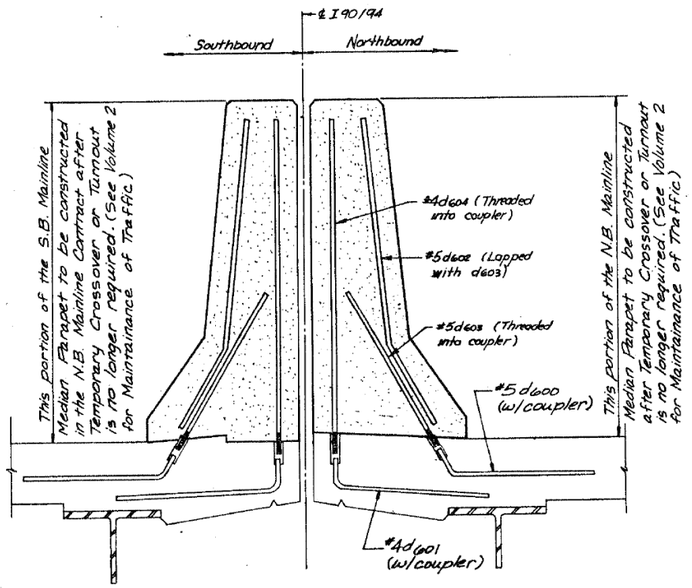

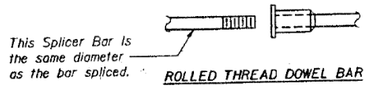


** ONE PIECE

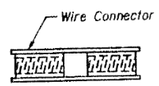

SPLICER ALTERNATIVES

** Heavy Hex Nuts conforming to ASTM A 563, Grade C, D or DH may be used.

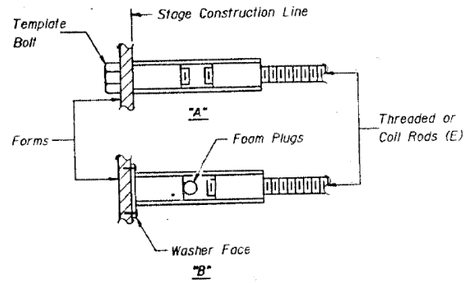

INSTALLATION AND SETTING METHODS

"A" : Set splicer by means of a template bolt.
"B" : Set splicer by nailing to wood forms or cementing to steel forms.
(E) : Indicates epoxy coating.

NOTES

Steel Splicer (Coupler) assembly shall be of an approved type and shall develop in tension at least 125 percent of the yield strength of the lapped reinforcement bars.

Steel Splicer rods shall be of minimum 60 ksi yield strength, threaded or coiled full length and have effective tensile stress area equal or greater than that of the lapped reinforcement bars

All reinforcement bars shall be lapped and tied to the splicer rods.

Splicer (coupler) assembly in the slab shall be epoxy coated in accordance with the requirements for reinforcement bars.

Other systems of similar design may be submitted to the Engineer for approval. Approval shall be based on certified test results from an approved testing laboratory that the proposed splicer (coupler) assembly satisfies the following requirements:

① Minimum Capacity = (Tension in kips) $1.25 \times f_y \times A_l$

② Minimum *Pull-out Strength = (Tension in kips) $1.25 \times fs_{allow} \times A_l$

Where f_y = Yield strength of lapped reinforcement bars in ksi.
fs_{allow} = Allowable tensile stress in lapped reinforcement bars in ksi (Service Load)
A_l = Tensile stress area of lapped reinforcement bars.
* = 28 day concrete

Typical Splicer (Coupler) Assembly Sizes:

In Slabs —
- #5 bar lap with $\frac{3}{4}$"ϕ Splicer (Coupler) x 2'-0" Splicer Rods → Minimum Capacity = 23.0 kips-tension; Minimum Pull-out Strength = 9.2 kips-tension

In Sub-Structure —
- #7 bar lap with 1"ϕ Splicer (Coupler) x 3'-5" Splicer Rods → Minimum Capacity = 45.1 kips-tension; Minimum Pull-out Strength = 18.0 kips-tension
- #8 bar lap with $1\frac{1}{4}$"ϕ Splicer (Coupler) x 4'-6" Splicer Rods → Minimum Capacity = 58.9 kips-tension; Minimum Pull-out Strength = 23.6 kips-tension

SHEET TT2 OF 2

REVISIONS	
Name	Date

STATE OF ILLINOIS
DEPARTMENT OF TRANSPORTATION
F.A.I. ROUTE 90/94 (DAN RYAN EXPRESSWAY)
SECTION 1985-077 B-R-COOK COUNTY
N.B. MAINLINE RECONSTRUCTION
TURNOUT AND CROSSOVER COUPLER DETAILS
Scale : NONE — Drawn By: MMS
Date : AUGUST, 1988 — Checked By: MEM
ENVIRODYNE ENGINEERS INC.
Chicago, Illinois

FILE NAME: pw:\\AECOM-NA-AWS1.aecomonline.local:AECOM_DS02_NA\Documents\01 Americas\Transportation\60269938 Circle\Phase_II\000_CAD\008_Structural\Sign Structures\62A76 Sign Structure\62A76-Span-55329-Exist Plans
12:41:46 PM

HBM ENGINEERING GROUP, LLC

USER NAME = francisco.lopez	DESIGNED - JMI	REVISED -
	CHECKED - MAI, JJS	REVISED -
PLOT SCALE = N.T.S	DRAWN - JMI	REVISED -
PLOT DATE = 1/24/2020	CHECKED - MAI, JJS	REVISED -

STATE OF ILLINOIS
DEPARTMENT OF TRANSPORTATION

EXISTING RECORD DRAWINGS
STRUCTURE NO. 016-1111
SHEET NO.AS12-43 OF AS12-49SHEETS

F.A.I. RTE.	SECTION	COUNTY	TOTAL SHEETS	SHEET NO.
90/94/290	2015-019R	COOK	2155	1480
		CONTRACT NO. 62A76		
	ILLINOIS	FED. AID PROJECT		

FOR INFORMATION ONLY

FEDERAL AID ROUTE NO.	SECTION	COUNTY	TOTAL SHEETS	SHEET NO.
90/94	*	COOK	88	76
STA.		TO STA.		
FED. RD. DIST. NO.	ILLINOIS	FED. AID PROJECT		

* 1985-077 B-R

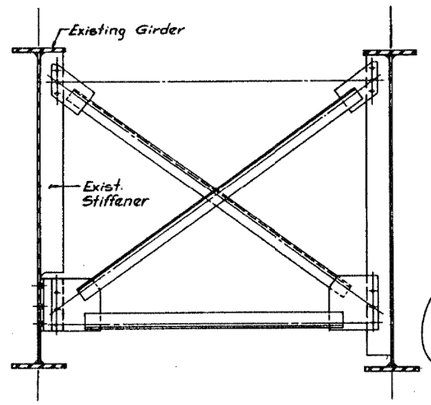

CORROSION REPAIRS – TYPE I
(Crossframe to Transverse Stiffener)

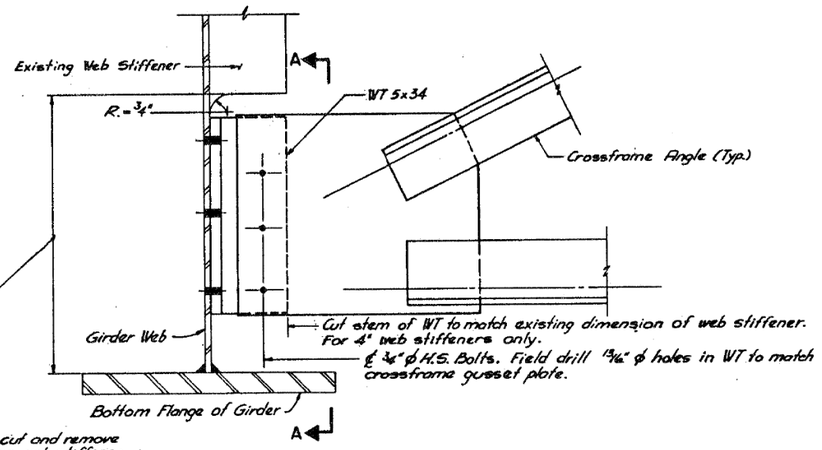

ELEVATION

CORROSION REPAIR SCHEDULE

Structure No.	No. Required
016-0137	0
016-1110	8
016-1111	12
016-1112	16
016-1113	21
016-1114 & 016-1070	0
016-1115	10
016-1114	0
016-1047	0
016-1116	10
016-1117	9
016-1118	0

NOTES

1) The Corrosion Repair, crossframe gusset plate to transverse stiffener, to be used in field as directed by the Engineer.
2) Quantities shown in the Corrosion Repair Schedule are estimates based on a 1984 inspection report. Payment to the Contractor will be made on actual quantities used.
3) Corrosion Repairs shown on this sheet included in Bid item "Structural Steel Repair."

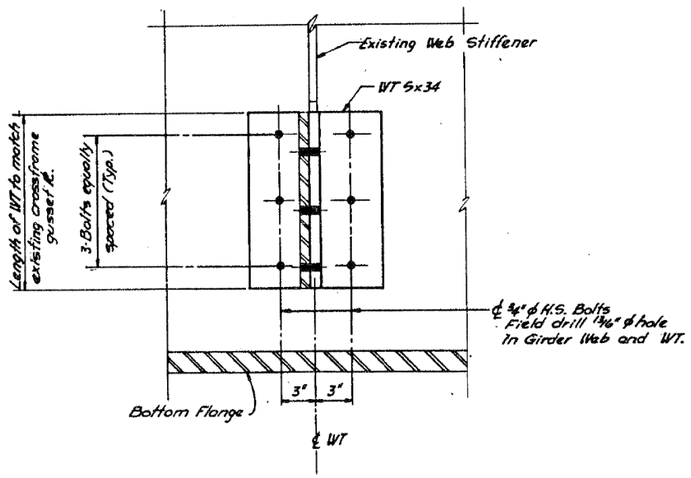

SECTION A-A

SHEET SR 1 OF 7

REVISIONS	
Name	Date

STATE OF ILLINOIS
DEPARTMENT OF TRANSPORTATION
F.A.I. ROUTE 90/94 (DAN RYAN EXPRESSWAY)
SECTION 1985-077B-R- COOK COUNTY
N.B. MAINLINE RECONSTRUCTION
STRUCTURAL REPAIRS – ALL STRUCTURES
CORROSION REPAIRS – TYPE I

Scale : NONE
Date : AUGUST, 1988
Drawn By: L.L.
Checked By: W.P.K.

ENVIRODYNE ENGINEERS INC.
Chicago, Illinois

HBM ENGINEERING GROUP, LLC

USER NAME = francisco.lopez	DESIGNED - JMI	REVISED -	STATE OF ILLINOIS DEPARTMENT OF TRANSPORTATION	EXISTING RECORD DRAWINGS STRUCTURE NO. 016-1111	SHEET NO.AS12-44 OF AS12-49SHEETS
	CHECKED - MAI, JJS	REVISED -			
PLOT SCALE = N.T.S	DRAWN - JMI	REVISED -			
PLOT DATE = 1/24/2020	CHECKED - MAI, JJS	REVISED -			

F.A.I. RTE.	SECTION	COUNTY	TOTAL SHEETS	SHEET NO.
90/94/290	2015-019R	COOK	2155	1481
		CONTRACT NO. 62A76		
	ILLINOIS	FED. AID PROJECT		

FILE NAME: pw:\\AECOM-NA-AWS1.aecomonline.local:AECOM_DS02_NA\Documents\01 Americas\Transportation\60269938 CirclePhase_III\000_CAD\008_Structural\Sign Structures\62A76 Sign Structure\62A76-Span-55329-Exist Plans
12:41:51 PM

FOR INFORMATION ONLY

FEDERAL AID ROUTE NO.	SECTION	COUNTY	TOTAL SHEETS	SHEET NO.
90/94	1	COOK	88	78
STA.		TO STA.		
FED. RD. DIST. NO.	ILLINOIS	FED. AID PROJECT		

* 1985-077 B-R

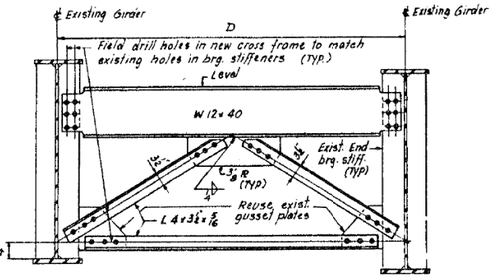

END CROSS FRAME - TYPE 1

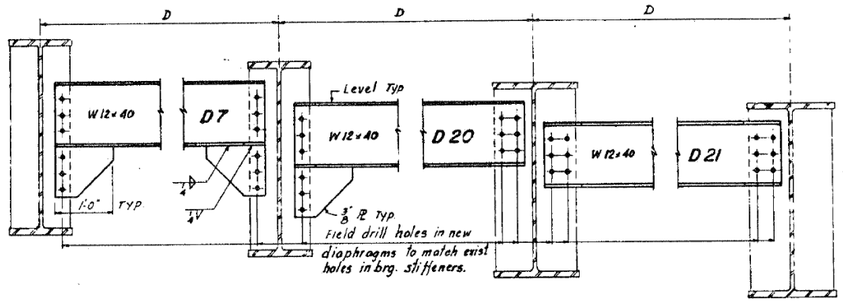

END DIAPHRAGMS D7, D20 & D21

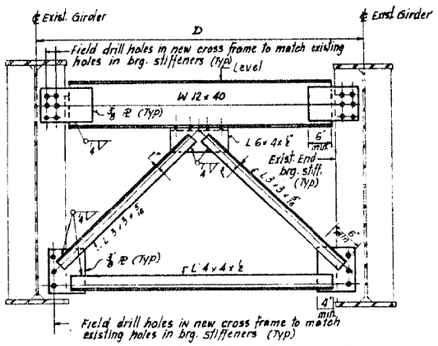

END CROSS FRAME - TYPE 2

(For 48", 54", 60" & 72" web Girders)

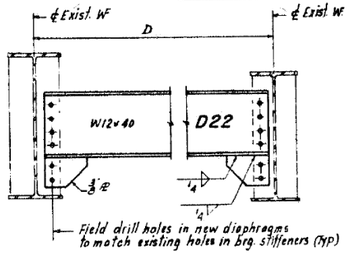

END DIAPHRAGM D22

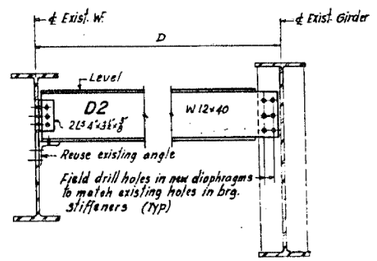

END DIAPHRAGM D2

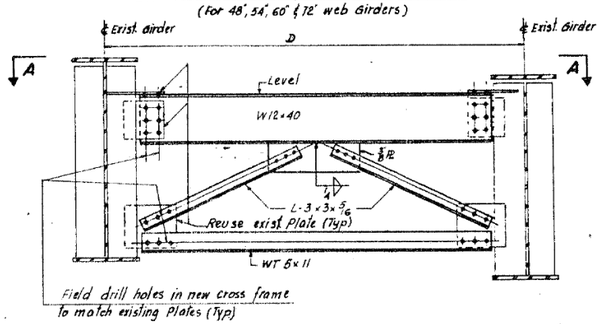

END CROSS FRAME C1

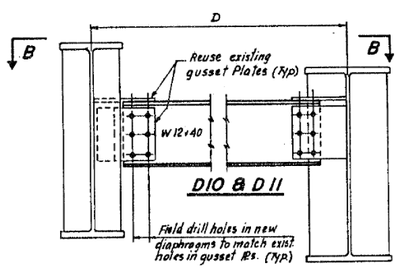

DIO & DII

END DIAPHRAGMS D10 & D11

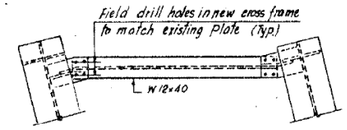

SECTION A-A

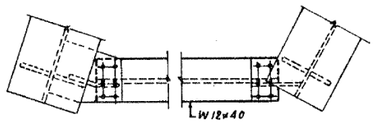

SECTION B-B

	PIER NO.	SPAN	TYPE ○	TYPE ⊗	LOCATION BTW. GIRDERS	DIST. "D"	NO REQ'D	DEPTH EXIST. GIRDER WEB
STRUCTURE 016-1111 N.B.	1	1		1	61-R-62-R	7'-11"	1	60
	1	1		1	62-R-63-R	7'-11"	1	
	1	1		1	63-R-64-R	7'-11"	1	
	1	1		1	64-R-66-R	8'-5⅞"	1	
	1	1		1	66-R-67-R	8'-5⅞"	1	
	1	1		1	67-R-68-R	8'-5⅞"	1	
	1	1		1	68-R-69-R	8'-5⅞"	1	60
STRUCTURE 016-1112 N.B. MAINLINE	13	13	CF-1	2	61-R-62-R	7'-11"	1	60
	13	13	CF-1	2	62-R-63-R	7'-11"	1	
	13	13	CF-1	2	63-R-64-R	7'-11"	1	
	13	13	CF-1	2	65-R-66-R	8'-6"	1	
	13	13	CF-1	2	66-R-67-R	8'-6"	1	
	13	13	CF-1	2	67-R-68-R	8'-6"	1	
	28	26	CF-1	2	61-R-62-R	7'-11"	1	
	28	26	CF-1	2	62-R-63-R	7'-11"	1	
	28	26	CF-1	2	63-R-64-R	7'-11"	1	
	28	26	D2	D2	66-R-67-R	8'-4"	1	
	28	26	D2	D2	67-R-68-R	8'-4"	1	
	28	28	CF-1	2	63-R-64-R	7'-11"	1	
	28	28	CF-1	2	65-R-66-R	8'-4"	1	
	30	30	CF-1	2	65-R-66-R	8'-4"	1	60
	30	30	CF-1	2	68-R-69-R	8'-4"	1	60
	30	30	CF-1	2	69-R-610-R	5'-3 9/16"	1	60
STRUCTURE 016-1112 N.B. RAMP D	D11	D11	CF-1	2	61-D-62-D	7'-9½"	1	54
	D11	D11	CF-1	2	62-D-63-D	8'-6"	1	
	D11	D11	CF-1	2	63-D-64-D	8'-6"	1	
	D11	D11	CF-1	2	64-D-65-D	7'-6¼"	1	
	D13	D13	CF-1	2	61-D-62-D	6'-4¼"	1	
	D13	D13	CF-1	2	62-D-63-D	7'-0⅛"	1	
	D13	D13	CF-1	2	63-D-64-D	7'-0⅛"	1	
	D13	D12	CF-1	2	61-D-62-D	5'-10 13/16"	1	54
STRUCTURE 016-1112 N.B. MAINLINE	1	31	CF-1	2	61-R-62-R	7'-11"	1	60
	1	31	CF-1	2	62-R-63-R	7'-11"	1	
	1	31	CF-1	2	63-R-64-R	7'-11"	1	
	1	31	CF-1	2	65-R-66-R	8'-4"	1	
	1	31	CF-1	2	66-R-67-R	8'-4"	1	
	1	31	CF-1	2	67-R-68-R	8'-4"	1	
	1	31	CF-1	2	68-R-69-R	8'-4"	1	60

○ Denotes Type as shown on Historical Contract Plans.
⊗ Denotes Type as shown on N.B. Reconstruction Contract Plans.

NOTES:

1. Field Connections cross frames and diaphragms - ¾ ϕ High Strength Bolts.
2. Steel Repairs shown on this sheet included in Bid Item "Structural Steel Repair."

SHEET SR 3 OF 7

REVISIONS	
Name	Date

STATE OF ILLINOIS
DEPARTMENT OF TRANSPORTATION
F.A.I. ROUTE 90/94 (DAN RYAN EXPRESSWAY)
SECTION 1985-077B-R-COOK COUNTY
N.B. MAINLINE RECONSTRUCTION
STRUCTURAL REPAIRS - ALL STRUCTURES
END DIAPHRAGMS
Scale : NONE
Date : AUGUST, 1988
Drawn By : J.G.
Checked By : W.B.
ENVIRODYNE ENGINEERS INC.
Chicago, Illinois

HBM ENGINEERING GROUP, LLC

USER NAME = francisco.lopez		DESIGNED - JMI		REVISED -	
		CHECKED - MAI, JJS		REVISED -	
PLOT SCALE = N.T.S		DRAWN - JMI		REVISED -	
PLOT DATE = 1/24/2020		CHECKED - MAI, JJS		REVISED -	

STATE OF ILLINOIS
DEPARTMENT OF TRANSPORTATION

EXISTING RECORD DRAWINGS
STRUCTURE NO. 016-1111
SHEET NO. AS12-45 OF AS12-49 SHEETS

F.A.I. RTE.	SECTION	COUNTY	TOTAL SHEETS	SHEET NO.
90/94/290	2015-019R	COOK	2155	1482
		CONTRACT NO. 62A76		
		ILLINOIS	FED. AID PROJECT	

FILE NAME: pw:\\AECOM-NA-AWS1.aecomonline.local:AECOM_DS02_NADocuments\01 Americas\Transportation\60269938 Circle\Phase_II\0000_CAD\008_Structural\Sign Structures\62A76 Sign Structure\62A76-Span-55329-Exist Plans
12:41:57 PM

FOR INFORMATION ONLY

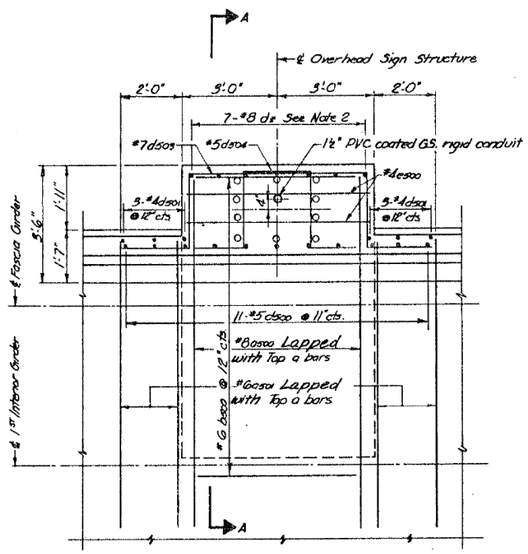

PLAN
SIGN SUPPORT AT OUTSIDE PARAPET

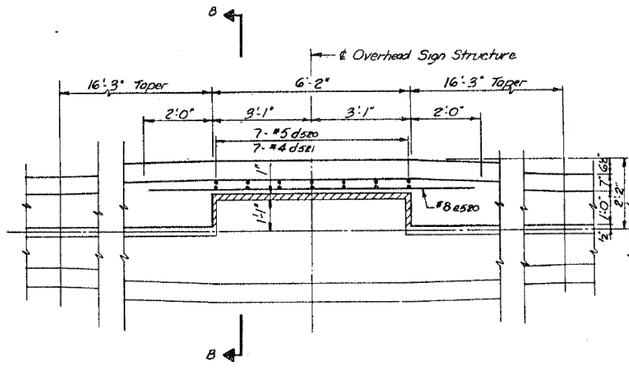

SECTION C-C
SIGN SUPPORT AT MEDIAN PARAPET

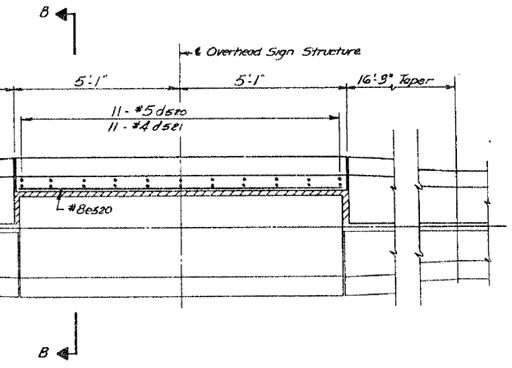

SECTION C-C
SIGN SUPPORT AT MEDIAN NEAR AN INTERIOR PIER (See Note 6)

FEDERAL AID ROUTE NO.	SECTION	COUNTY	TOTAL SHEETS	SHEET NO.
90/94	*	COOK	88	85
STA.		TO STA.		
FED. RD. DIST. NO.	ILLINOIS	FED. AID PROJECT		

* SECTION 1985-077 B-R

BAR LIST

OUTSIDE PARAPET

MARK	NUMBER	SIZE	LENGTH	TYPE
as00	see Note 3	#8	20'-0"	—
as01	see Note 3	#6	18'-0"	—
bs00	see Note 3	#6	5'-9"	—
bs01	19	#6	20'-0"	—
ds01	6	#4	5'-10"	L
ds00	11	#5	6'-0"	L
ds03	5	#7	14'-4"	⎍
ds04	5	#5	10'-7"	⎍
d*	7	#8	see Note 2	L
es00	2	#4	5'-9"	—
us70	See note 7	#5	14'-4"	□

MEDIAN PARAPET

MARK	NUMBER	SIZE	LENGTH	TYPE
ds20	7	#5	3'-6"	L
ds21	7	#4	3'-7"	L
es20	1	#8	9'-10"	—

MEDIAN PARAPET AT INTERIOR PIER

MARK	NUMBER	SIZE	LENGTH	TYPE
ds20	11	#5	3'-6"	L
ds21	11	#4	3'-7"	L
es20	1	#8	9'-10"	—

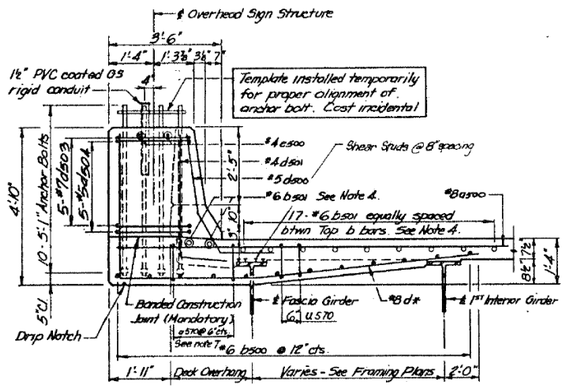

SECTION A-A

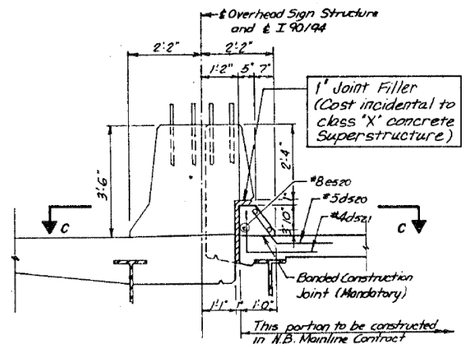

SECTION B-B

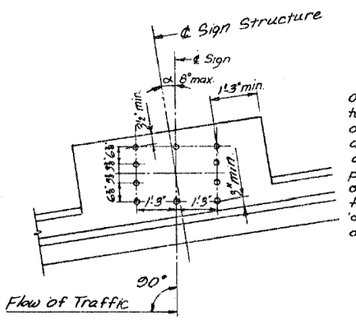

Overhead Signs must be perpendicular to the flow of traffic. When the outside parapet and/or median are not perpendicular to traffic, an angle 'α' is given on the deck plans. It shall be the responsibility of the Contractor to verify in the field the location and the angle 'α' of the anchor bolt group in order to properly erect the sign.

PLACEMENT OF ANCHOR BOLTS

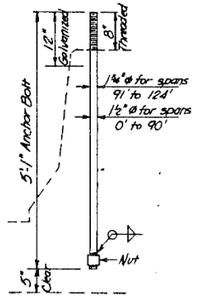

ANCHOR BOLT DETAIL
(ASTM A-576 Fy = 55,000 p.s.i)

Note:

1. An interior pier is defined as a pier in which the deck is continuous over it.
2. The bar length and bend diagram are determined from the deck overhang and beam spacings at that Station Location. Bar d* shall be given a 500 series bar designation and this bar will be indicated on the deck.
3. Actual number of bars is dependent on the spacing of the transverse reinforcement and is indicated on the deck plans and corresponding bar lists.
4. When the sign truss is located approximately 0.125 of the span length away from an interior pier then #6bs01 bars are not needed. If the sign truss is located >0.25 of the span length from an interior pier, or near an expansion joint, then #6bs01 shall be added to the deck reinforcement.
5. Cost of field drilling 1⅛"ø holes thru the web fascia girder shall be incidental to reinforcement.
6. When a sign truss is located near an interior pier & the aluminum joint is less than 14'-0" then the 'Sign Support @ Median near an Interior Pier' is used.
7. Actual number of bars is dependent on the deck overhang. The U570 is spaced at 6" cts. from the flange of the fascia girder to the edge of the deck overhang.
8. Shear studs must be provided at 8" spacing to the top flange of the fascia girder for full length of sign support.

SHEET PD1 OF 4

REVISIONS	
Name	Date

STATE OF ILLINOIS
DEPARTMENT OF TRANSPORTATION
F.A.I. ROUTE 90/94 (DAN RYAN EXPRESSWAY)
SECTION 1985-077B-R-COOK COUNTY
N.B. MAINLINE RECONSTRUCTION
PARAPET MOUNTED OVERHEAD SIGN STRUCTURE
Scale: NONE — Drawn By: M.M.S.
Date: AUGUST, 1988 — Checked By: M.E.M.
ENVIRODYNE ENGINEERS INC.
Chicago, Illinois

FILE NAME: pw:\\AECOM-NA-AWS1.aecomonline.local:AECOM_DS02_NA\Documents\01 Americas\Transportation\60269938 Circle\Phase_II\000_CAD\008_Structural\Sign Structures\62A76 Sign Structure\62A76-Span-55329-Exist Plans
12:42:02 PM

HBM ENGINEERING GROUP, LLC	USER NAME = francisco.lopez	DESIGNED - JMI	REVISED -	
		CHECKED - MAI, JJS	REVISED -	
	PLOT SCALE = N.T.S	DRAWN - JMI	REVISED -	
	PLOT DATE = 1/24/2020	CHECKED - MAI, JJS	REVISED -	

STATE OF ILLINOIS
DEPARTMENT OF TRANSPORTATION

EXISTING RECORD DRAWINGS
STRUCTURE NO. 016-1111
SHEET NO.AS12-46 OF AS12-49SHEETS

F.A.I. RTE.	SECTION	COUNTY	TOTAL SHEETS	SHEET NO.
90/94/290	2015-019R	COOK	2155	1483
			CONTRACT NO. 62A76	
		ILLINOIS	FED. AID PROJECT	

FOR INFORMATION ONLY

FEDERAL AID ROUTE NO.	SECTION	COUNTY	TOTAL SHEETS	SHEET NO.
90/94	*	COOK	88	86
STA.		TO STA.		
FED. RD. DIST. NO.	ILLINOIS	FED. AID PROJECT		

* 1985-077 B-R

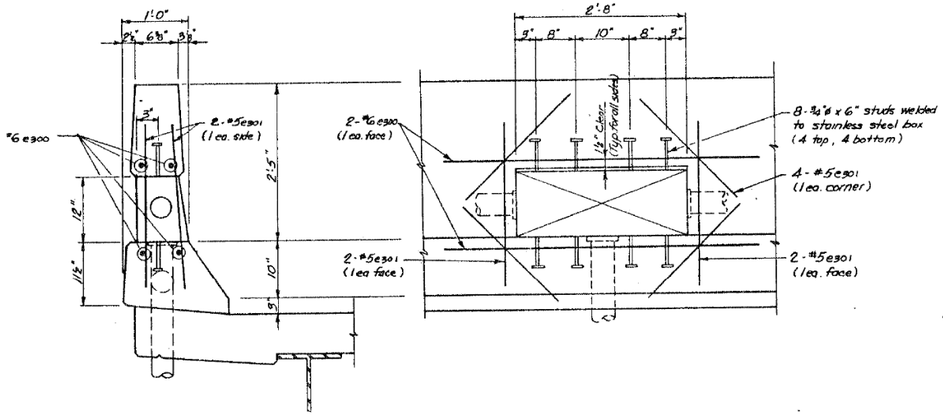

SECTION ELEVATION

JUNCTION BOX AT OUTSIDE PARAPET

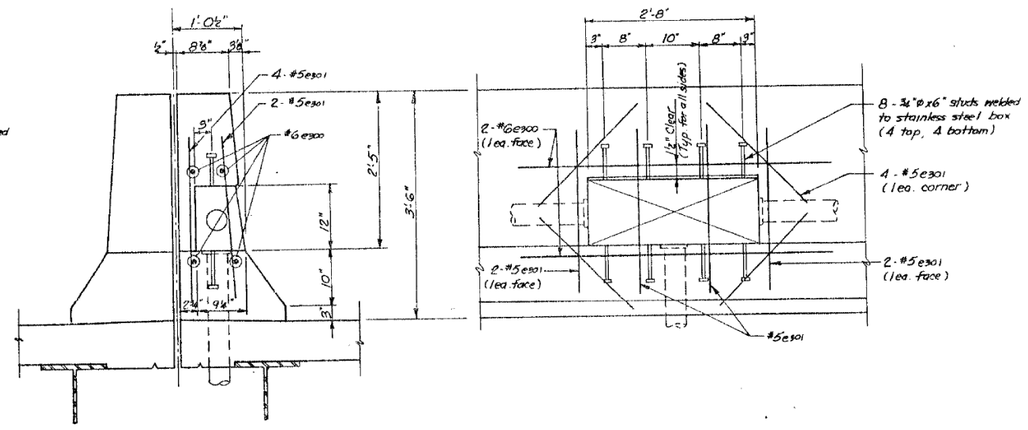

SECTION ELEVATION

JUNCTION BOX AT MEDIAN PARAPET

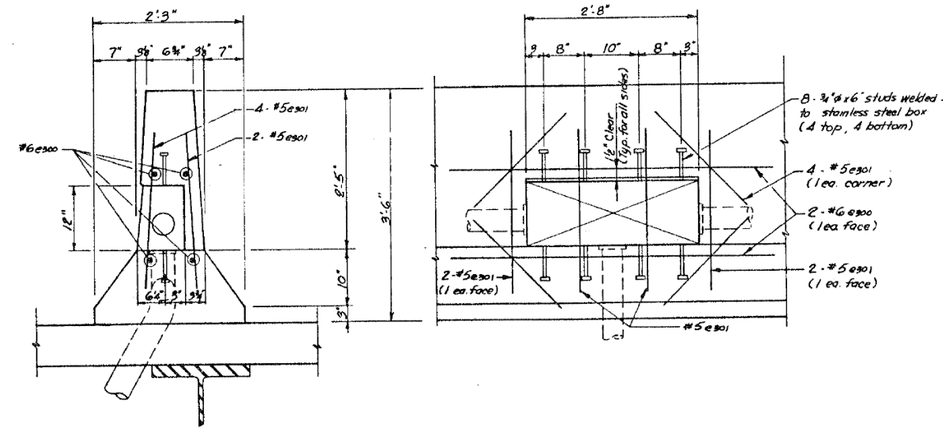

SECTION ELEVATION

JUNCTION BOX AT CONCRETE BARRIER

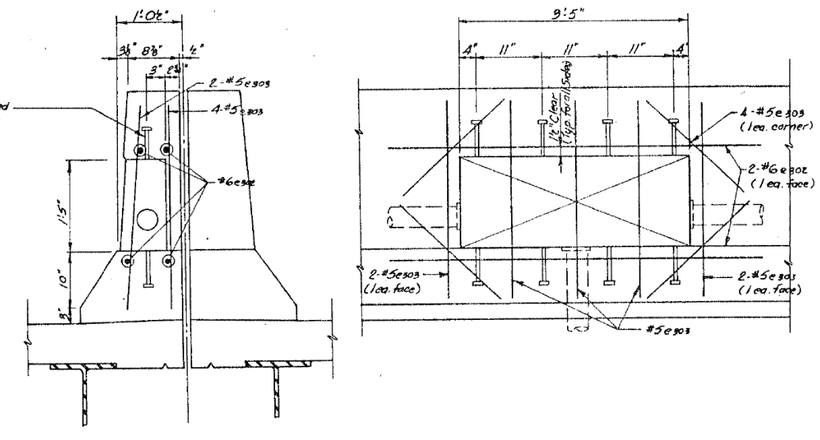

SECTION ELEVATION

SURVEILANCE BOX AT MEDIAN PARAPET

SURVEILANCE BOX				
MARK	NUMBER	SIZE	LENGTH	TYPE
e302	4	#6	6'-5"	—
e303	11	#5	3'-0"	—
OUTSIDE PARAPET				
MARK	NUMBER	SIZE	LENGTH	TYPE
e300	4	#6	5'-8"	—
e301	8	#5	2'-6"	—
MEDIAN PARAPET				
MARK	NUMBER	SIZE	LENGTH	TYPE
e300	4	#6	5'-8"	—
e301	10	#5	2'-6"	—
CONRETE BARRIER				
MARK	NUMBER	SIZE	LENGTH	TYPE
e300	4	#6	5'-8"	—
e301	10	#5	2'-6"	—

SHEET PD2 OF 4

REVISIONS	
Name	Date

STATE OF ILLINOIS
DEPARTMENT OF TRANSPORTATION
F.A.I. ROUTE 90/94 (DAN RYAN EXPRESSWAY)
SECTION 1985-077 B-R-COOK COUNTY
N.B. MAINLINE RECONSTRUCTION
PARAPET MOUNTED JUNCTION BOXES
Scale : NONE Drawn By: M MS
Date : AUGUST, 1988 Checked By: M.E.M
ENVIRODYNE ENGINEERS INC.
Chicago, Illinois

HBM ENGINEERING GROUP, LLC

USER NAME = francisco.lopez	DESIGNED - JMI	REVISED -	STATE OF ILLINOIS DEPARTMENT OF TRANSPORTATION	EXISTING RECORD DRAWINGS STRUCTURE NO. 016-1111	SHEET NO.AS12-47 OF AS12-49SHEETS
	CHECKED - MAI, JJS	REVISED -			
PLOT SCALE = N.T.S	DRAWN - JMI	REVISED -			
PLOT DATE = 1/24/2020	CHECKED - MAI, JJS	REVISED -			

F.A.I. RTE.	SECTION	COUNTY	TOTAL SHEETS	SHEET NO.
90/94/290	2015-019R	COOK	2155	1484
		CONTRACT NO. 62A76		
	ILLINOIS	FED. AID PROJECT		

FILE NAME: pw:\\AECOM-NA-AWS1.aecomonline.local\AECOM_D502_NA\Documents\01 Americas\Transportation\60269938 CirclePhase_II\000_CAD\008_Structural\Sign Structures\62A76 Sign Structure\62A76-Span-55329-Exist Plans

12:42:07 PM

FOR INFORMATION ONLY

FEDERAL AID ROUTE NO.	SECTION	COUNTY	TOTAL SHEETS	SHEET NO.
90/94	-R	COOK	88	87
STA.		TO STA.		
FED. RD. DIST. NO.	ILLINOIS	FED. AID PROJECT		

R 1985-077 B-R

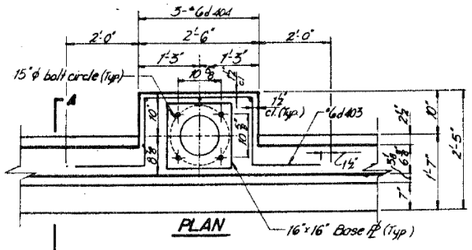

PLAN

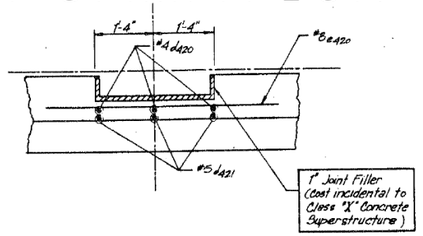

SECTION C-C

Note All edges shall have ¾" chamfer.

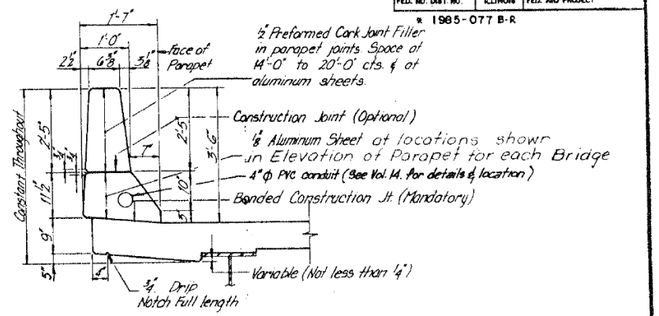

OUTSIDE PARAPET CONFIGURATION

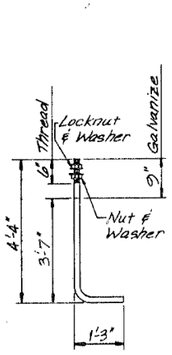

1"ϕ ANCHOR BOLT

Note: 1"ϕ x 5'-7" Anchor Bolt - Provide 2 flat washers, 1 regular nut & 1 locknut for each bolt. All nuts & Washers must be galvanized. Cost incidental to light standard.

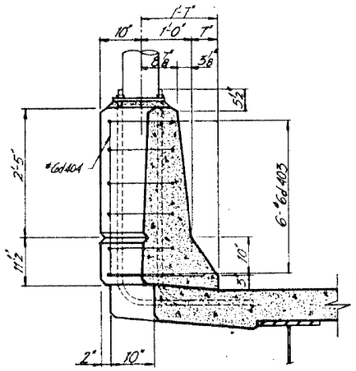

SECTION A-A
LIGHT STANDARD SUPPORT AT OUTSIDE PARAPET

Light Standard at Outside Parapet				
Mark	Number	Size	Length	Type
d403	6	#6	8'-11"	
d404	9	#6	5'-1"	

Light Standard at Median Parapet				
Mark	Number	Size	Length	Type
d420	3	#4	3'-7"	
d421	3	#5	3'-6"	
e420	1	#8	6'-3"	

Note:
- Contractor shall verify in field the exact location of the light standard in order to properly reinforce the light support.

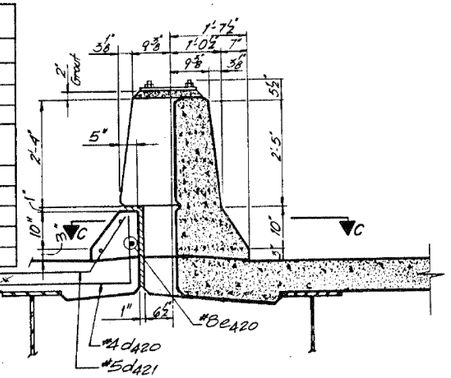

SECTION B-B
LIGHT STANDARD SUPPORT AT MEDIAN PARAPET

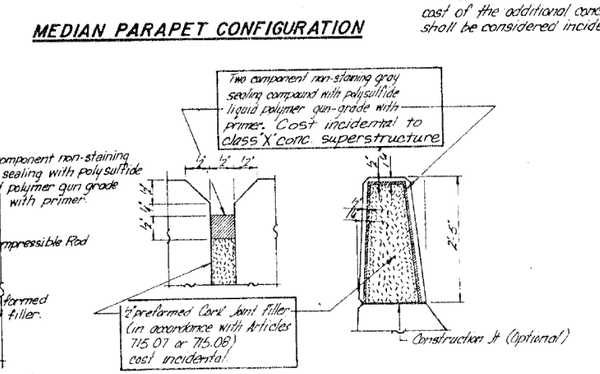

MEDIAN PARAPET CONFIGURATION

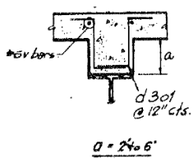

a = 2¼ to 6"

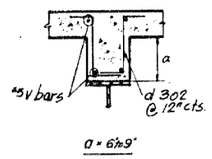

a = 6½ to 9"

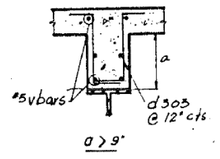

a > 9"

FILLET REINFORCEMENT

NOTE: Additional reinforcement is required for fillet heights in excess of 3 inches as illustrated above. The d301, d302, and d303 bars are detailed in the bar lists of each structure, however the placement of the bars is not shown in the plans. The contractor shall place the bars between rows of stud shear connectors or channels in accordance with the details above.

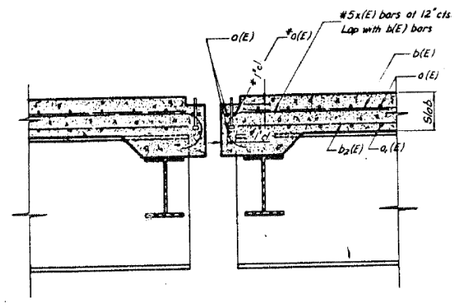

SECTION AT NEOPRENE EXPANSION JOINT

* Place a(E) Bar in back of anchor bolt as shown if required to maintain 1" clear (+0-⅛") Anchor Bolts should be tied to a(E).

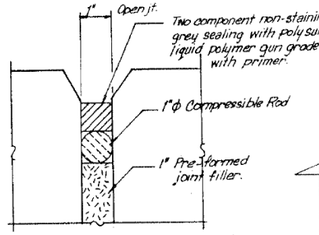

Materials shown are to be installed between the southbound and northbound median parapets and cost incidental to class "A" Concrete Superstructure.

DETAIL A

PARAPET JOINT DETAIL

SHEET P03 OF 4

REVISIONS	
Name	Date

STATE OF ILLINOIS
DEPARTMENT OF TRANSPORTATION
F.A.I. ROUTE 90/94 (DAN RYAN EXPRESSWAY)
SECTION 1985-077BR-COOK COUNTY
N. B. MAINLINE RECONSTRUCTION
PARAPET MOUNTED LIGHT POLES AND TYPICAL PARAPET CROSS SECTIONS
Scale : NONE — Drawn By: AV
Date : AUGUST, 1988 — Checked By: MMS
ENVIRODYNE ENGINEERS INC.
Chicago, Illinois

FILE NAME: pw:\AECOM-NA-AWS1.aecomonline.local\AECOM_D502_NA\Documents\01 Americas\Transportation\60269938 Circle\Phase_II\000_CAD\008_Structural\Sign Structures\62A76 Sign Structure\62A76-Span-55329-Exist Plans
12:42:12 PM

HBM ENGINEERING GROUP, LLC

USER NAME = francisco.lopez	DESIGNED - JMI	REVISED -
	CHECKED - MAI, JJS	REVISED -
PLOT SCALE = N.T.S	DRAWN - JMI	REVISED -
PLOT DATE = 1/24/2020	CHECKED - MAI, JJS	REVISED -

STATE OF ILLINOIS
DEPARTMENT OF TRANSPORTATION

EXISTING RECORD DRAWINGS
STRUCTURE NO. 016-1111
SHEET NO.AS12-48 OF AS12-49SHEETS

F.A.I. RTE.	SECTION	COUNTY	TOTAL SHEETS	SHEET NO.
90/94/290	2015-019R	COOK	2155	1485
			CONTRACT NO. 62A76	
		ILLINOIS	FED. AID PROJECT	

FOR INFORMATION ONLY

FEDERAL AID ROUTE NO.	SECTION	COUNTY	TOTAL SHEETS	SHEET NO.
90/94	*	COOK	88	88A
STA.		TO STA.		
FED. RD. DIST NO.	ILLINOIS	FED. AID PROJECT		

* 1985-077 B-R

Note:-
- Bolts Are ⅞"Ø-M 164 (Unless Otherwise Noted)
- Holes Are 1"Ø (Field Drilled) (Unless Otherwise Noted)
- Shear Studs Are ¾"Ø.

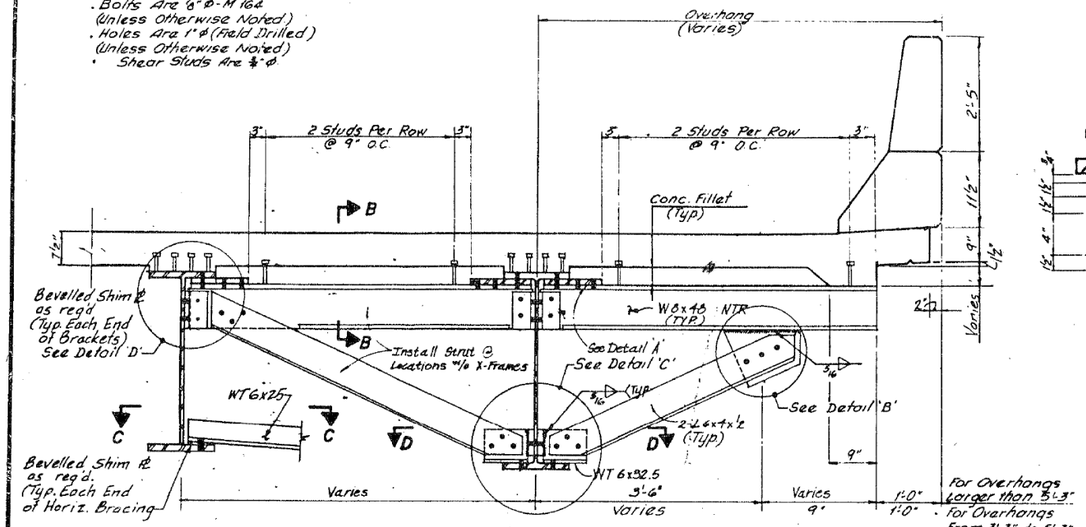

TYPICAL BRACKET FOR DECK OVERHANGS

For Overhangs Longer than 5'-3" for Overhangs From 3'-3" to 5'-3"

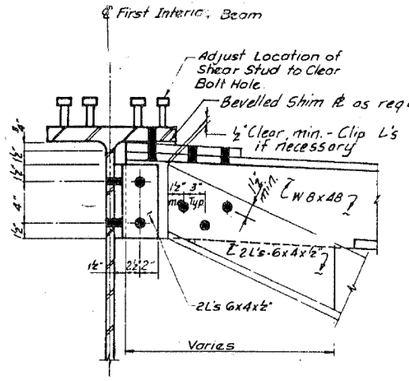

DETAIL 'D'

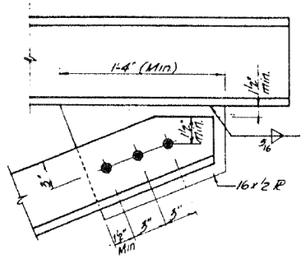

DETAIL 'B'

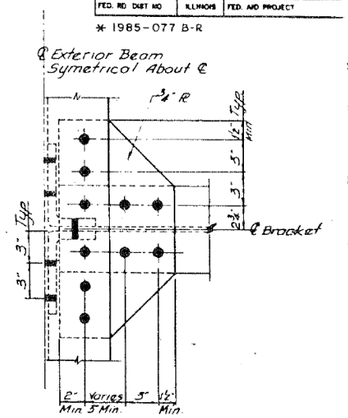

DETAIL 'A'

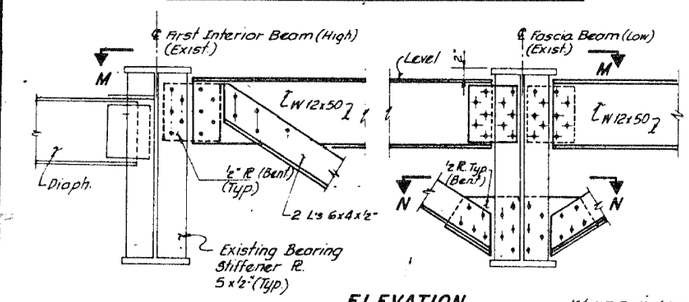

ELEVATION @ Bearing Stiffener

1"Ø H.I Bolts (M-164) 1⅛" Holes Field Drill

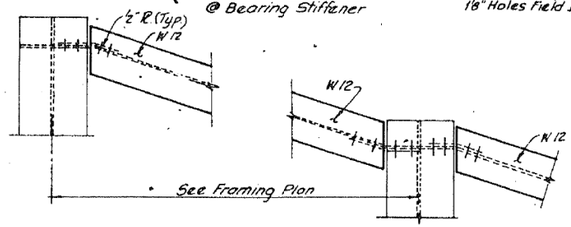

PLAN M-M

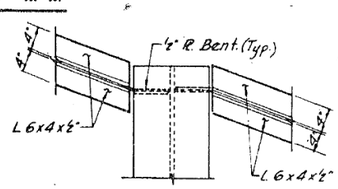

SECTION N-N

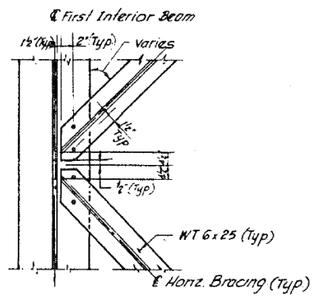

SECTION C-C

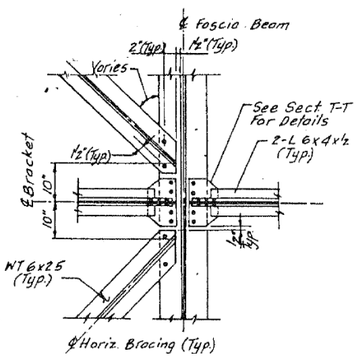

SECTION D-D

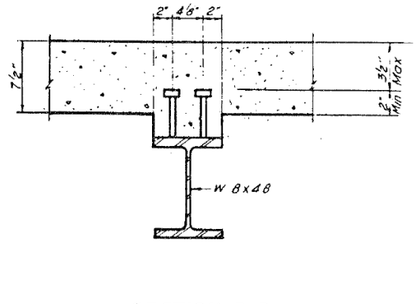

SECTION B-B

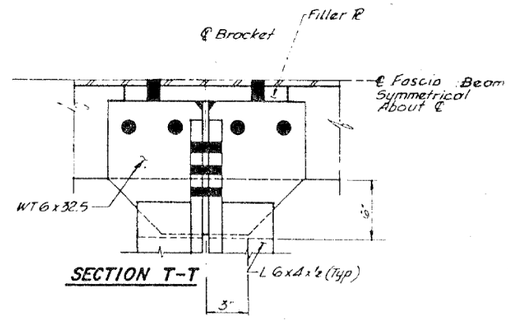

SECTION T-T

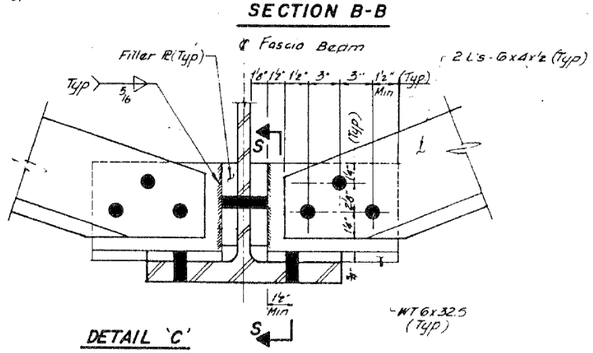

DETAIL 'C'

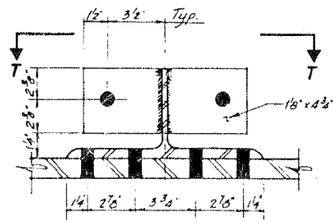

SECTION- S-S

SHEET BR 1 OF 1

REVISIONS	
Name	Date

STATE OF ILLINOIS
DEPARTMENT OF TRANSPORTATION
F.A.I. ROUTE 90/94 (DAN RYAN EXPRESSWAY)
SECTION 1985-077 BR-COOK COUNTY
N.B. MAINLINE RECONSTRUCTION
OVERHANG BRACKET - ALL STRUCTURES
BRACKET FOR DECK OVERHANGS

Scale : NONE — Drawn By : D.H
Date : AUGUST, 1988 — Checked By : W.P.K

ENVIRODYNE ENGINEERS INC.
Chicago, Illinois

HBM ENGINEERING GROUP, LLC

USER NAME = francisco.lopez		DESIGNED - JMI		REVISED -	
		CHECKED - MAI, JJS		REVISED -	
PLOT SCALE = N.T.S		DRAWN - JMI		REVISED -	
PLOT DATE = 1/24/2020		CHECKED - MAI, JJS		REVISED -	

STATE OF ILLINOIS
DEPARTMENT OF TRANSPORTATION

EXISTING RECORD DRAWINGS
STRUCTURE NO. 016-1111
SHEET NO.AS12-49 OF AS12-49SHEETS

F.A.I. RTE.	SECTION	COUNTY	TOTAL SHEETS	SHEET NO.
90/94/290	2015-019R	COOK	2155	1486
		CONTRACT NO. 62A76		
	ILLINOIS	FED. AID PROJECT		

FILE NAME: pw:\\AECOM-NA-AWS1.aecomonline.local:AECOM_DS02_NA\Documents\01 Americas\Transportation\60269938 Circle\Phase_II\000_CAD\008_Structural\Sign Structures\62A76 Sign Structure\62A76-Span-SS329-Exist Plans
12:42:17 PM

Benchmark: T.B.M. #49 North NE Flange bolt on hydrant on NW corner of 21st St. and Emerald St. Elev. 593.47

Existing Structure: Existing S.N. 016-1110 is a part of the Dan Ryan Expressway Viaduct. The superstructure consists of a reinforced concrete deck supported on steel plate girders. The mainline structure consists of two units having three continuous spans each. The entrance and exit ramp structures have simple spans at each end with cantilever extending into center span to support center span on steel bearings. The substructure consists of multiple column concrete piers supported on concrete caissons. The structure was built in 1961 and reconstructed/widened in 1988. The structure has an overall length of 678′-1 3/8″ (℄ Pier 1 to ℄ Pier 7). The out-to-out deck width is 67′-2″ for the length of bridge in which the Entrance Ramp Structure is adjacent to the mainline structure (℄ Pier 1 to ℄ Pier 4) and varies from 92′-0 7/8″ (℄ Pier 4) to 86′-4 3/8″ (℄ Pier 7) for the length of bridge in which the Entrance Ramp deck joins the mainline deck.

Traffic Control: Traffic will be maintained on I-90/94 utilizing staged construction; however, the 18th Street to NB I-90/94 Entrance Ramp will be closed during construction.

Salvage: No salvage.

DESIGN SPECIFICATIONS

2002 AASHTO Standard Specifications for Highway Bridges

SCOPE OF WORK

1. Provide protective shield within limits indicated on the plans.
2. Remove portions of bridge deck and parapets at the locations indicated, and per the details shown, in the plans.
3. Install anchor bolts for proposed sign structure support, reconstruct bridge deck and parapets per the details shown in the plans, perform bridge deck grooving and apply protective coat to new concrete as required.
4. Repaint lane markings as required.

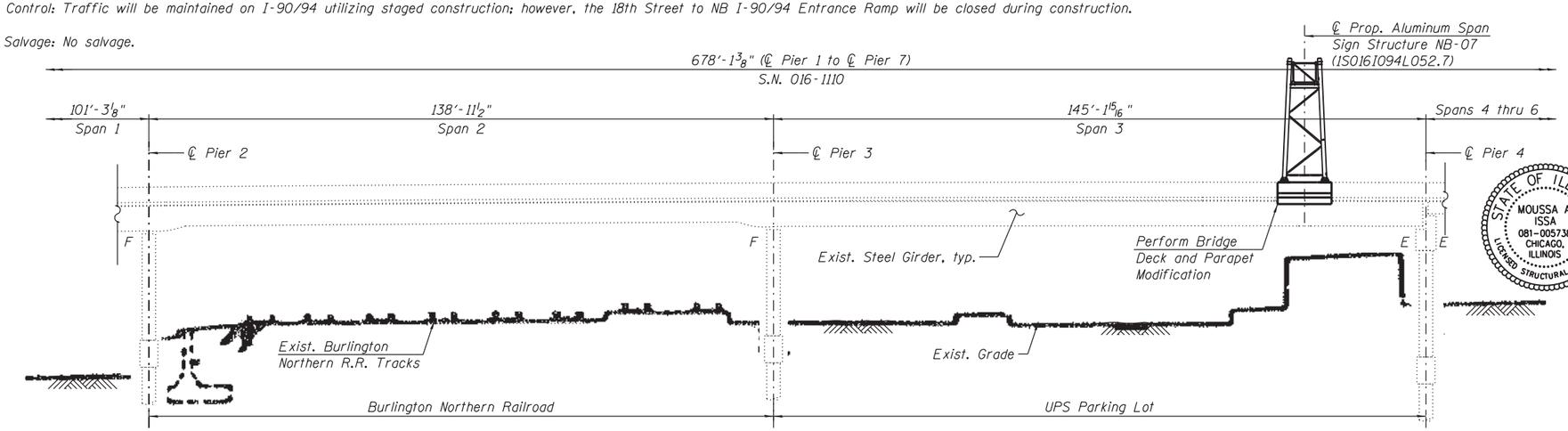

PARTIAL ELEVATION

STATE OF ILLINOIS
MOUSSA A ISSA
081-005738
CHICAGO, ILLINOIS
LICENSED STRUCTURAL ENGINEER

SIGNED Moussa A. Issa
DR. MOUSSA A. ISSA, S.E., IL. LIC. NO. 081-005738
EXPIRES 11-30-2020

DATE 1/29/2020
FOR SHEETS S13-01 THRU S13-09
AND AS13-01 THRU AS13-82
(TOTAL OF 91 SHEETS)

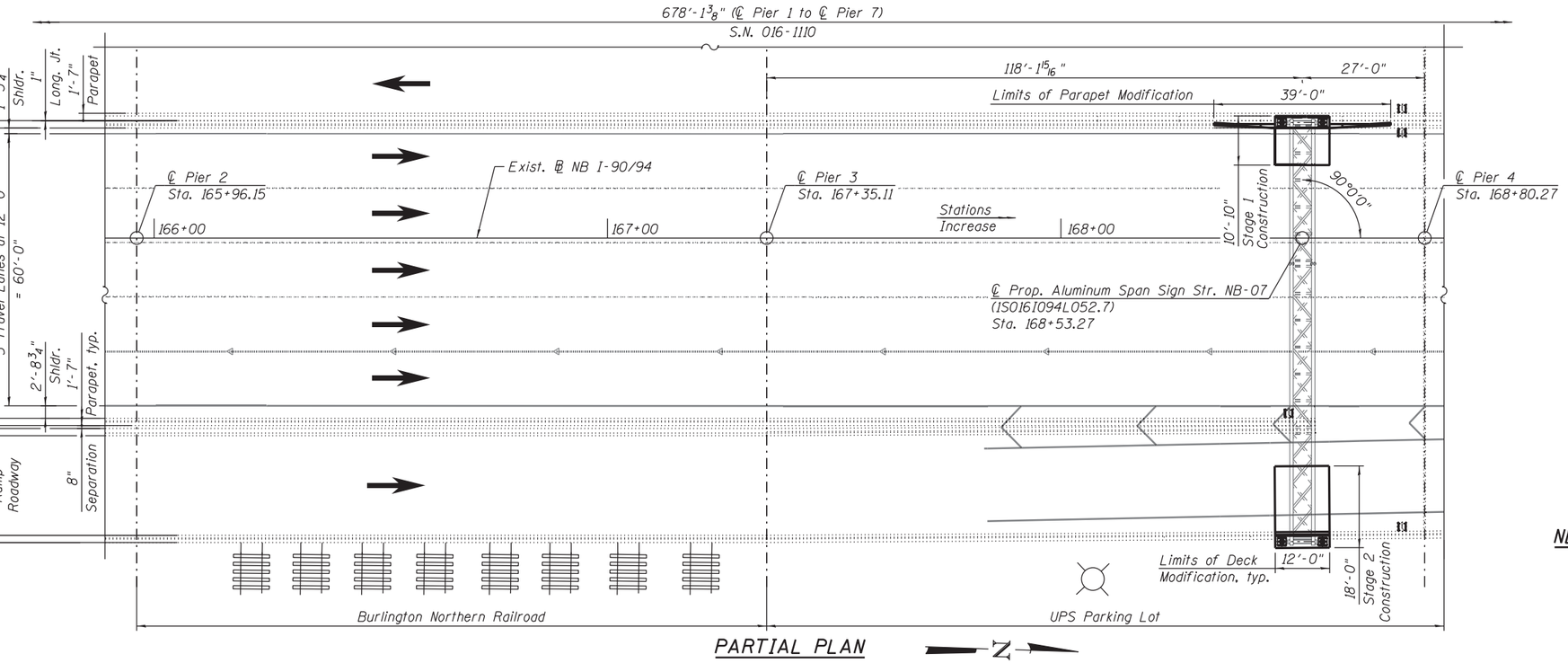

PARTIAL PLAN

NOTES:

1. For General Notes, Index of Sheets, Total Bill of Material, and Profile Grade Lines, see Sheet S13-02.
2. For additional details, see Roadway and/or Maintenance of Traffic Plans.

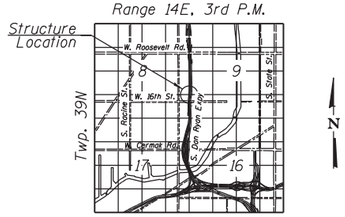

LOCATION SKETCH

GENERAL PLAN AND ELEVATION
NB & SB I-90/94 - FROM 15TH ST. TO 16TH ST.
F.A.I. RTE. 90/94- SECTION 2015-019R
COOK COUNTY
STA. 168+53.27
STRUCTURE NO. 016-1110

HBM ENGINEERING GROUP, LLC

USER NAME = elizabath.kurian	DESIGNED - WM	REVISED -	STATE OF ILLINOIS DEPARTMENT OF TRANSPORTATION	
	CHECKED - MAI, JJS	REVISED -		
PLOT SCALE = N.T.S	DRAWN - WM	REVISED -		
PLOT DATE = 1/29/2020	CHECKED - MAI, JJS	REVISED -		SHEET NO. S13-01 OF S13-09 SHEETS

F.A.I. RTE.	SECTION	COUNTY	TOTAL SHEETS	SHEET NO.
90/94/290	2015-019R	COOK	2155	1487
		CONTRACT NO. 62A76		
	ILLINOIS	FED. AID PROJECT		

FILE NAME: pw:\\AECOM-NA-AWS1.aecomonline.local\AECOM_DS02_NA\Documents\01 Americas\Transportation\60269938 Circle\Phase_II\000_CAD\008_Structural\Sign Structures\62A76 Sign Structure\62A76-SPAN-SS220-GPE.dgn
4:44:11 PM

GENERAL NOTES:

1. No field welding is permitted except as specified in the contract documents.

2. Reinforcement bars designated (E) shall be epoxy-coated.

3. Prior to pouring the new concrete deck, all heavy or loose rust, loose mill scale, and other loose or potentially detrimental foreign material shall be removed from the surfaces in contact with concrete. Tightly adhered paint may remain unless otherwise noted. Removal shall be accomplished by methods that will not damage the steel and the cost will be included in the pay item covering removal of the existing concrete.

   As directed by the Engineer, existing construction accessories welded to the top flange of beams and girders shall be removed. The weld areas shall be ground flush and inspected for cracks using magnetic particle testing (MT) or dye penetrant testing (PT) by qualified personnel approved by the Engineer. Any cracks that cannot be removed by grinding ¼ in. deep shall be identified and reported to the Bureau of Bridges and Structures for further disposition. The cost of removing welded accessories, grinding and inspecting weld areas and grinding cracks will be paid for according to Article 109.04 of the Standard Specifications.

4. If the Contractor elects to use cantilever forming brackets on the exterior beams or girders, the brackets shall be placed at the same locations as required for the hardwood blocks in Article 503.06(b) of the Standard Specifications. If additional cantilever forming brackets are required, hardwood blocking shall be wedged between the exterior and first interior beam at each of these additional bracket locations.

5. Plan dimensions and details relative to existing plans are subject to nominal construction variations. The Contractor shall field-verify existing dimensions and details affecting new construction and make necessary approved adjustments prior to construction or ordering of materials. Such variations shall not be cause for additional compensation for a change in scope of the work; however, the Contractor will be paid for the quantity actually furnished at the unit price bid for the work.

6. The existing structural steel coating contains lead. The Contractor shall take appropriate precautions to deal with the presence of lead on this project.

7. Existing structural steel shall only be cleaned and painted as required by the Special Provision "Cleaning and Painting Contact Surface Areas of Existing Steel Structures".

8. The Contractor shall take all necessary precautions for the protection of passing vehicles, parked vehicles, equipment and pedestrians from falling objects and/or materials until completion of the work.

9. All of the construction work shown for this bridge will be completed utilizing temporary lane closures in accordance with the Maintenance of Traffic Special Provision and the provided details. It shall be the Contractor's responsibility to ensure that, before such temporary work areas are open to traffic, all loose items are removed or secured and the area is safe for opening to traffic. See Maintenance of Traffic Special Provision for additional information.

10. No concrete cutting shall be permitted until the cutting limits have been outlined by the Contractor and approved by the Engineer.

11. Existing reinforcement which is to be incorporated into the new construction shall be blast-cleaned to gray metal, straightened (without heating), and cut to fit. Cost shall be included with "Concrete Removal."

12. All exposed concrete edges shall have a ¾" x 45° chamfer, except where shown otherwise.

INDEX OF SHEETS

S13-01	General Plan and Elevation
S13-02	Total Bill of Material, Index of Sheets and General Notes
S13-03	Stage Construction (Sheet 1 of 2)
S13-04	Stage Construction (Sheet 2 of 2)
S13-05	Deck Partial Removal Plan and Sections
S13-06	Deck Partial Reconstruction Plans
S13-07	East and West Parapet - Partial Plan and Elevation
S13-08	Deck Reconstruction Sections and Details
S13-09	Existing Parapet Modification Details
AS13-01 thru AS13-82	Existing Record Drawings

TOTAL BILL OF MATERIAL

ITEM	UNIT	TOTAL
CONCRETE REMOVAL	CU YD	13.3
PROTECTIVE SHIELD	SQ YD	87
CONCRETE SUPERSTRUCTURE	CU YD	24.4
BRIDGE DECK GROOVING	SQ YD	28
PROTECTIVE COAT	SQ YD	81
REINFORCEMENT BARS, EPOXY COATED	POUND	4860

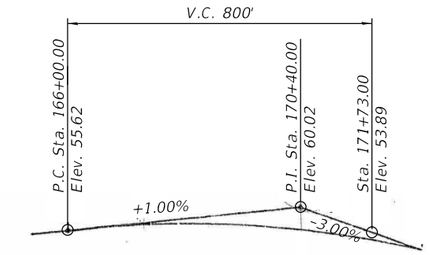

EXISTING PROFILE GRADE

(Along ℄ Exist. NB I-90/94)

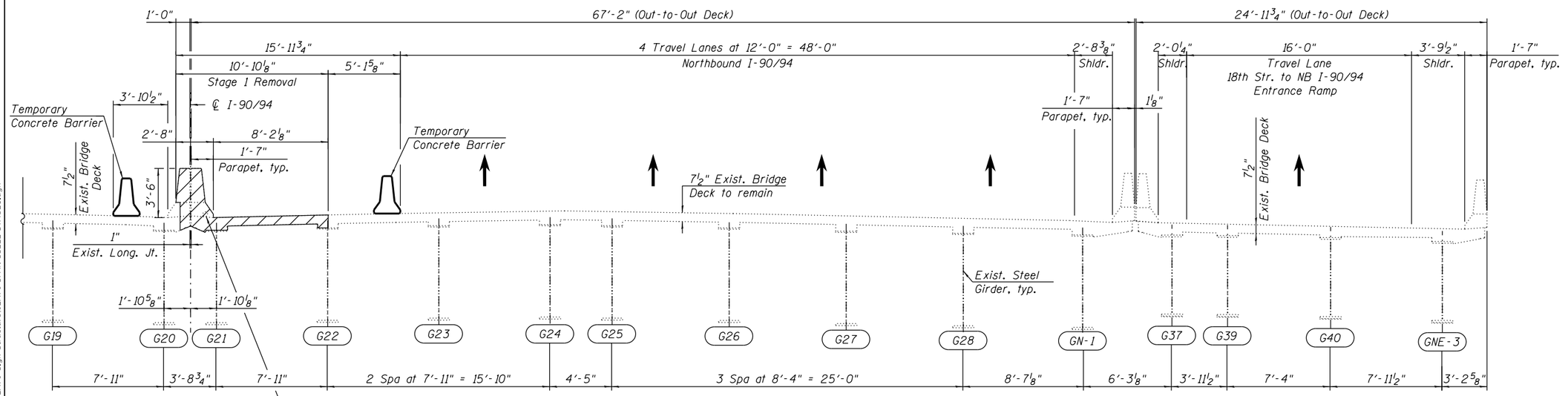

STAGE 1 REMOVAL

(Looking Upstation)
(Section taken at ℄ Prop. Aluminum Span Sign Structure)

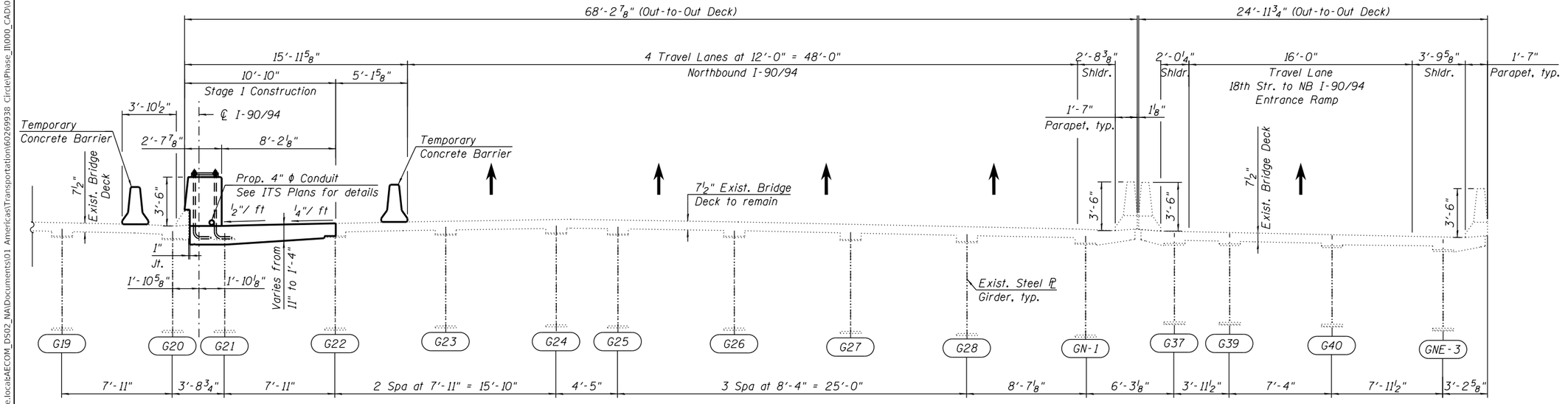

STAGE 1 CONSTRUCTION

(Looking Upstation)
(Section taken at ℄ Prop. Aluminum Span Sign Structure)

NOTE:

1. See Maintenance of Traffic (MOT) Plans for more details.

LEGEND:

Concrete Removal

FILE NAME: pw:\\AECOM-NA-AWS1.aecomonline.local:AECOM_DS02_NAIDocuments\01 Americas\Transportation\60269938 Circle\Phase_II\000_CAD\008_Structural\Sign Structures\62A76 Sign Structure\62A76-SPAN-SS222-STAGE1.dgn
4:44:51 PM

HBM ENGINEERING GROUP, LLC	USER NAME = elizabath.kurian	DESIGNED - MAA,EBK	REVISED -	STATE OF ILLINOIS DEPARTMENT OF TRANSPORTATION	STAGE CONSTRUCTION (SHEET 1 OF 2) STRUCTURE NO. 016-1110
		CHECKED - MAI, JJS	REVISED -		
	PLOT SCALE = N.T.S	DRAWN - EBK	REVISED -		
	PLOT DATE = 1/29/2020	CHECKED - MAI, JJS	REVISED -		SHEET NO. S13-03 OF S13-09 SHEETS

F.A.I. RTE.	SECTION	COUNTY	TOTAL SHEETS	SHEET NO.
90/94/290	2015-019R	COOK	2155	1489
		CONTRACT NO. 62A76		
	ILLINOIS	FED. AID PROJECT		

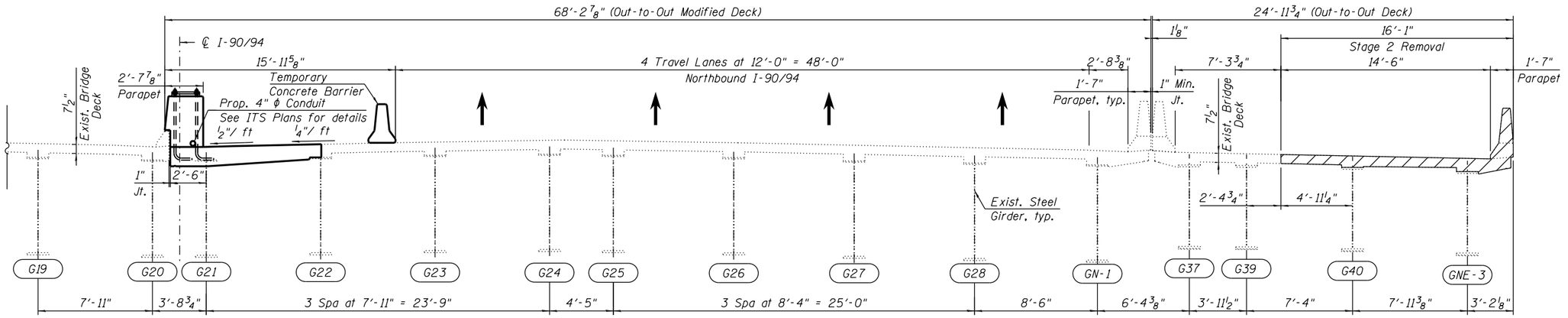

STAGE 2 REMOVAL

(Looking Upstation)
(Section taken at ℄ Prop. Aluminum Span Sign Structure)

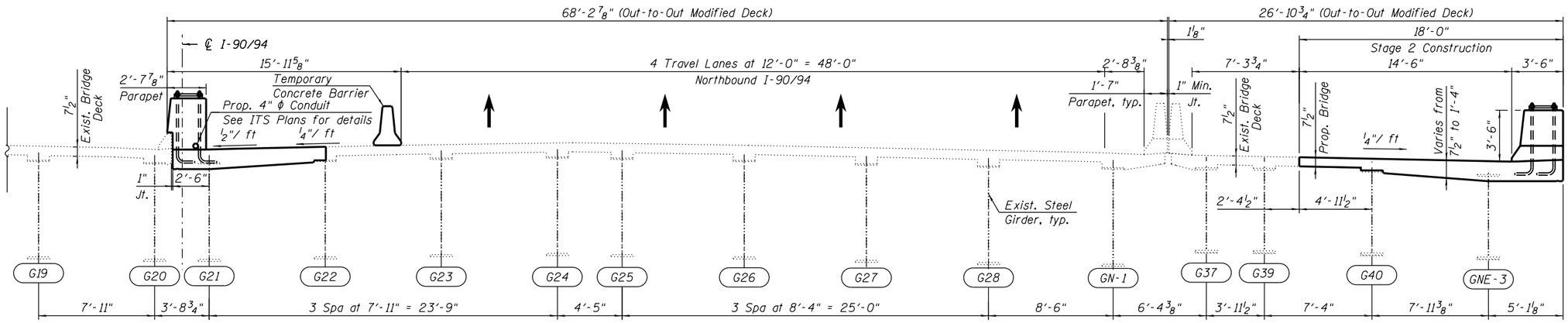

STAGE 2 CONSTRUCTION

(Looking Upstation)
(Section taken at ℄ Prop. Aluminum Span Sign Structure)

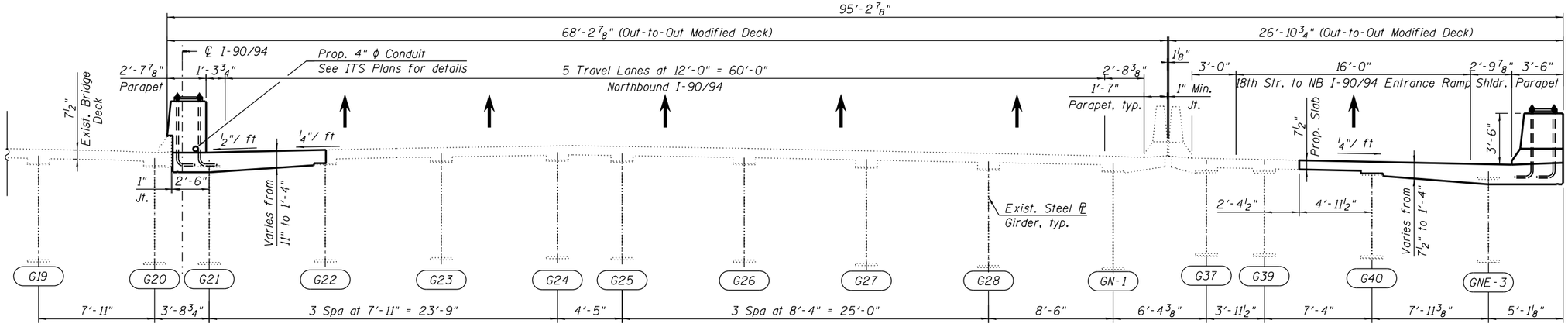

FINAL DECK CROSS-SECTION

(Looking Upstation)
(Section taken at ℄ Prop. Aluminum Span Sign Structure)

NOTE:

1. See Maintenance of Traffic (MOT) Plans for more details.

LEGEND:

Concrete Removal

HBM ENGINEERING GROUP, LLC	USER NAME = elizabath,kurian	DESIGNED - MAA,EBK	REVISED -	STATE OF ILLINOIS DEPARTMENT OF TRANSPORTATION
		CHECKED - MAI, JJS	REVISED -	
	PLOT SCALE = N.T.S	DRAWN - EBK	REVISED -	
	PLOT DATE = 1/29/2020	CHECKED - MAI, JJS	REVISED -	

STAGE CONSTRUCTION (SHEET 2 OF 2)
STRUCTURE NO. 016-1110
SHEET NO. S13-04 OF S13-09 SHEETS

F.A.I. RTE.	SECTION	COUNTY	TOTAL SHEETS	SHEET NO.
90/94/290	2015-019R	COOK	2155	1490
		CONTRACT NO. 62A76		
	ILLINOIS	FED. AID PROJECT		

FILE NAME: pw:\\AECOM-NA-AWS1.aecomonline.local:AECOM_DS02_NA\Documents\01 Americas\Transportation\60269938 CirclePhase_II\000_CAD\008_Structural\Sign Structures\62A76 Sign Structure\62A76-SPAN-SS223-STAGE2.dgn
4:44:58 PM

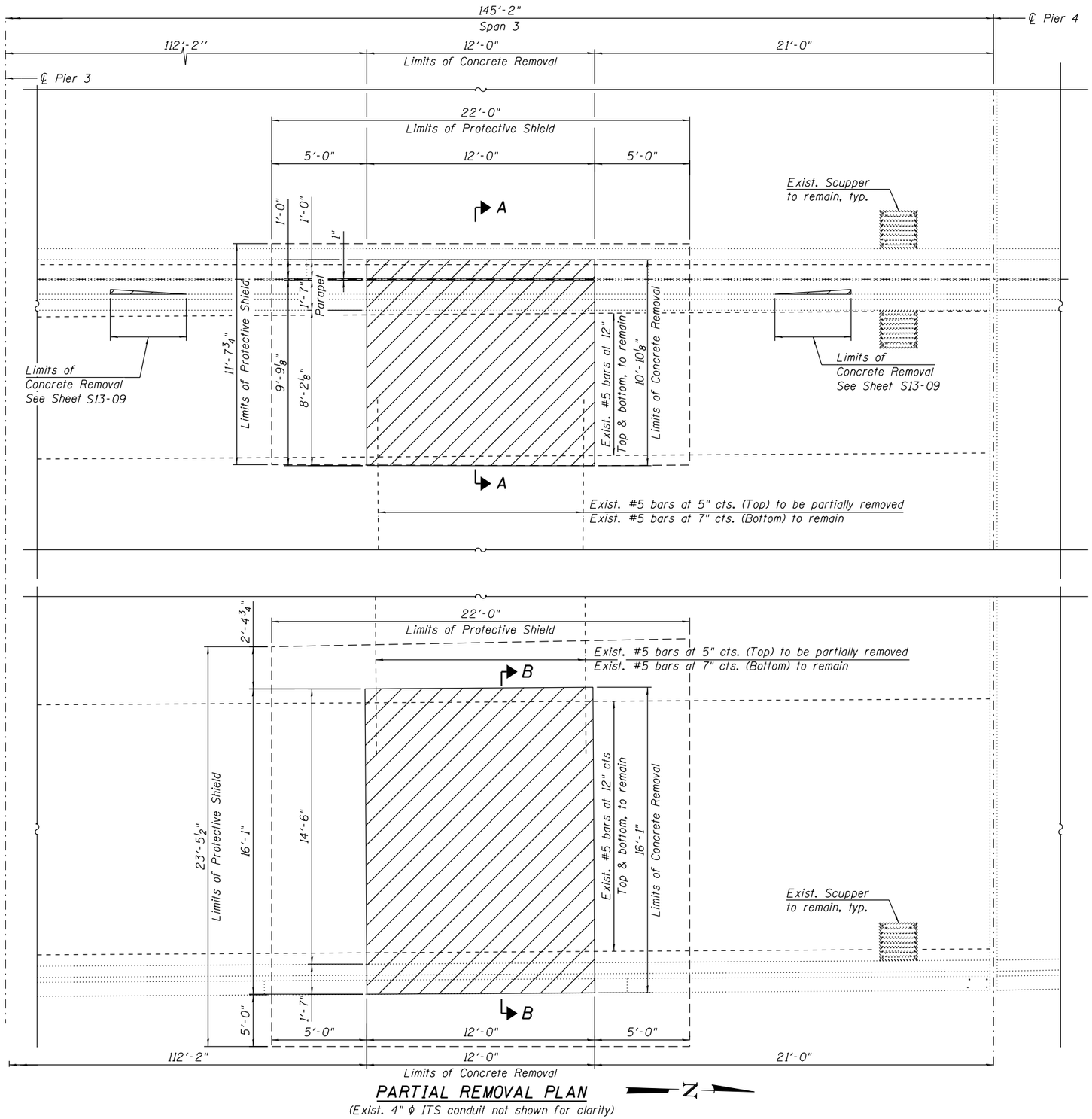

PARTIAL REMOVAL PLAN

(Exist. 4" ϕ ITS conduit not shown for clarity)

NOTES:

1. Existing reinforcement which is to be incorporated into the new construction shall be blast cleaned to gray metal, straightened (without heating), and cut to fit. Cost of which shall be includes with "Concrete Removal".
2. The Contractor shall exercise extreme caution during concrete removal activities to avoid damage to the existing drainage scuppers to remain. Any damage to the existing drainage scuppers to remain (including anchor studs and other connections to the drainage system or structure) shall be repaired by the Contractor, to the satisfaction of the Engineer, at no cost to the Department.

BILL OF MATERIAL

ITEM	UNIT	QUANTITY
Concrete Removal	CU YD	13.1
Protective Shield	SQ YD	87

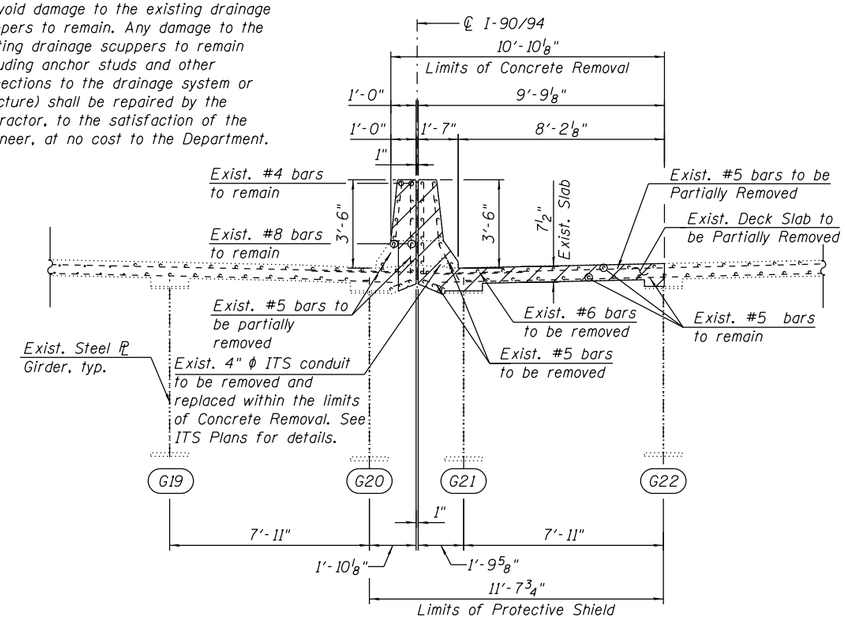

SECTION A-A

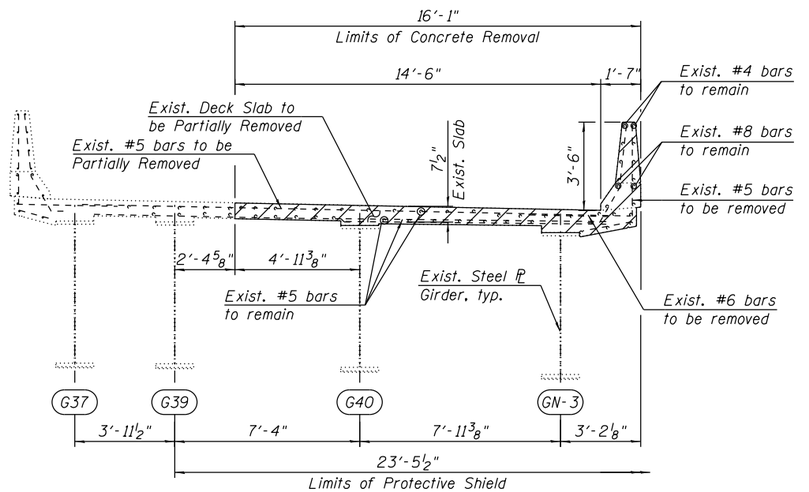

SECTION B-B

LEGEND

Concrete Removal

Limits of Protective Shield

HBM ENGINEERING GROUP, LLC	USER NAME = elizabath.kurian	DESIGNED - MAA	REVISED -	STATE OF ILLINOIS DEPARTMENT OF TRANSPORTATION	DECK PARTIAL REMOVAL PLAN AND SECTIONS STRUCTURE NO. 016-1110
		CHECKED - MAI, JJS	REVISED -		
	PLOT SCALE = N.T.S	DRAWN - MAA, AMS	REVISED -		SHEET NO. S13-05 OF S13-09 SHEETS
	PLOT DATE = 1/29/2020	CHECKED - MAI, JJS	REVISED -		

F.A.I. RTE.	SECTION	COUNTY	TOTAL SHEETS	SHEET NO.
90/94/290	2015-019R	COOK	2155	1491
		CONTRACT NO. 62A76		
		ILLINOIS	FED. AID PROJECT	

FILE NAME: pw:\AECOM-NA-AWS1.aecomonline.local:AECOM_D502_NAIDocuments\01 Americas\Transportation\60269938 Circle\Phase_II\000_CAD\008_Structural\Sign Structures\62A76 Sign Structure\62A76-SPAN-SS224- REMOVAL-PLAN.dgn

4:45:06 PM

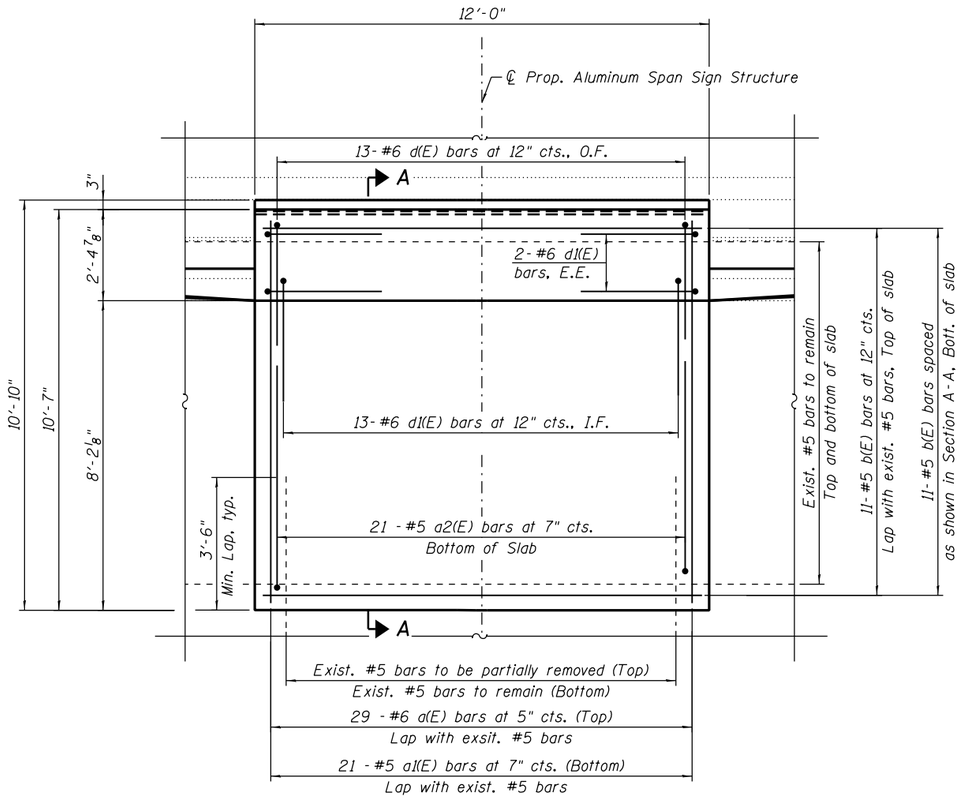

PARTIAL WEST DECK PLAN

(Parapet Reinforcement and 4" ϕ ITS conduit not shown for clarity)

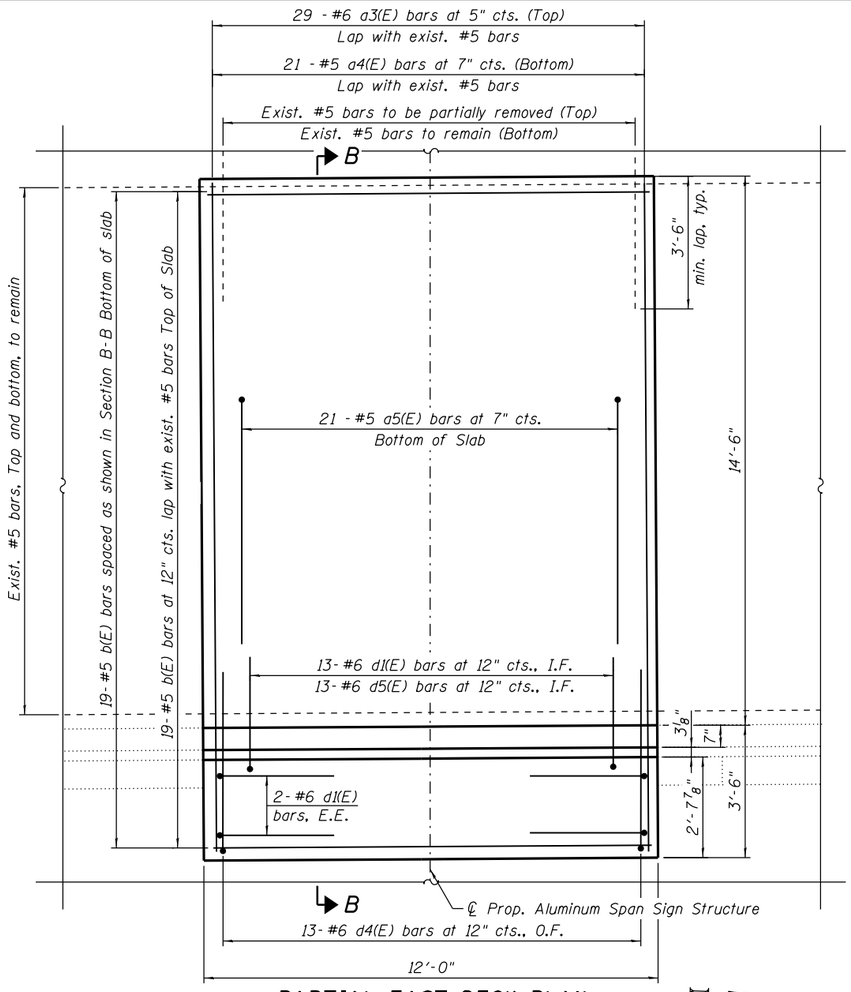

PARTIAL EAST DECK PLAN

(Parapet Reinforcement and 4" ϕ ITS conduit not shown for clarity)

NOTES:

1. For Total Bill of Materials, see Sheet S13-02.
2. Existing reinforcement which is to be incorporated into the new construction shall be blast cleaned to gray metal, straightened (without heating), and cut to fit. Cost of which shall be included with "Concrete Removal".
3. For Parapet Plan and Elevation and Parapet Joint Details, see Sheet S13-07.
4. For Sections A-A and B-B, Bar Details and Bill of Material, see Sheet S13-08.
5. For Parapet Modification Details, see Sheet S13-09.

LEGEND:

O.F. Outside Face

I.F. Inside Face

E.E. Each End

HBM ENGINEERING GROUP, LLC

USER NAME = elizabath.kurian	DESIGNED - MAA, EBK	REVISED -	
	CHECKED - MAI, JJS	REVISED -	
PLOT SCALE = N.T.S	DRAWN - MAA,EBK	REVISED -	
PLOT DATE = 1/29/2020	CHECKED - MAI, JJS	REVISED -	

STATE OF ILLINOIS
DEPARTMENT OF TRANSPORTATION

DECK PARTIAL RECONSTRUCTION PLANS
STRUCTURE NO. 016 - 1110
SHEET NO. S13-06 OF S13-09 SHEETS

F.A.I. RTE.	SECTION	COUNTY	TOTAL SHEETS	SHEET NO.
90/94/290	2015-019R	COOK	2155	1492
		CONTRACT NO. 62A76		
	ILLINOIS	FED. AID PROJECT		

FILE NAME: pw:\\AECOM-NA-AWS1.aecomonline.local:AECOM_DS02_NA\Documents\01 Americas\Transportation\60269938 CirclePhase_II\000_CAD\008_StructuralSign Structures\62A76 Sign Structure\62A76-SPAN-SS225-DECK_PLAN.dgn
4:45:14 PM

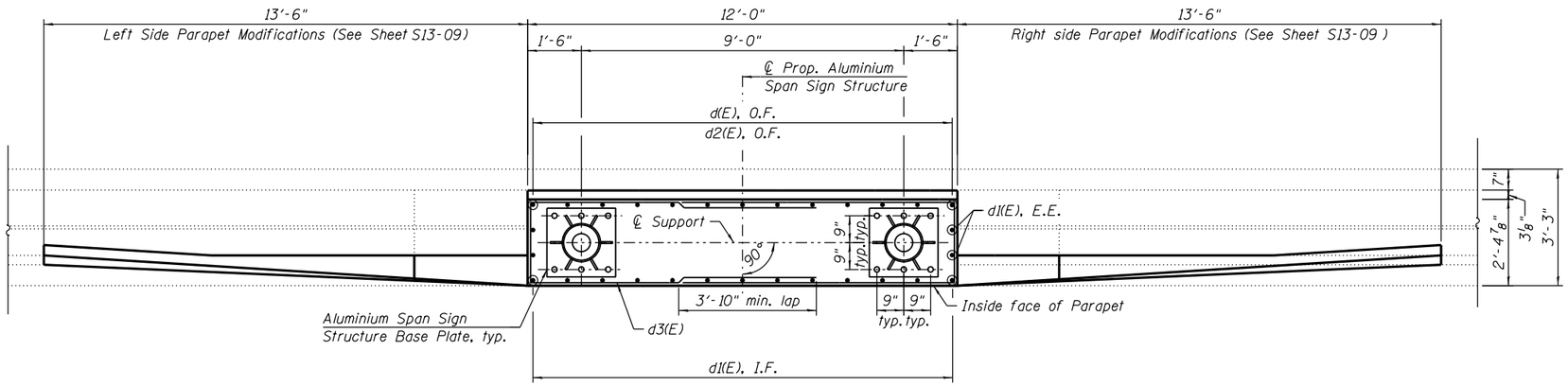

WEST PARAPET PLAN

(4" ϕ ITS conduit not shown for clarity)

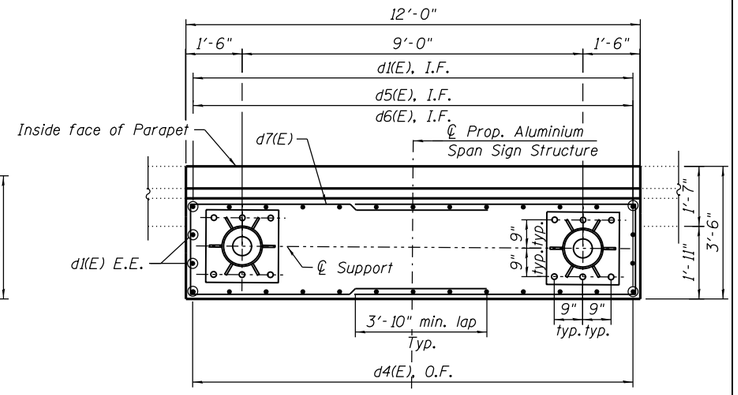

EAST PARAPET PLAN

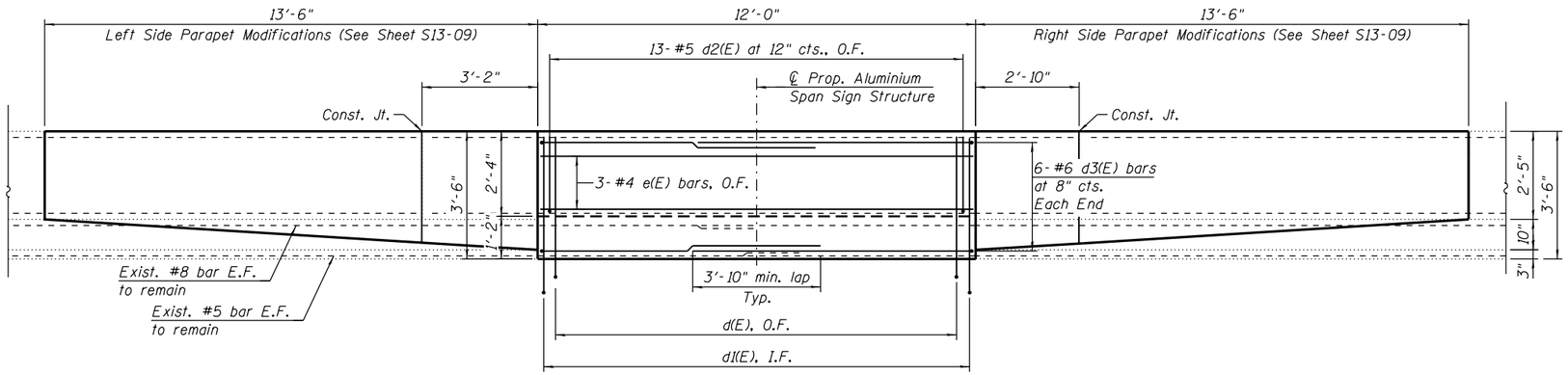

WEST PARAPET INSIDE ELEVATION

(4" ϕ ITS conduit not shown for clarity)

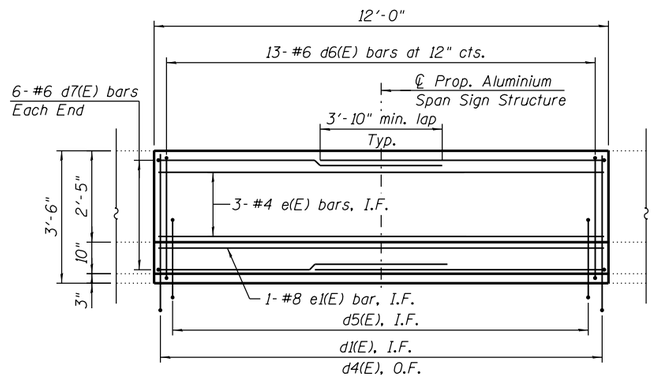

EAST PARAPET INSIDE ELEVATION

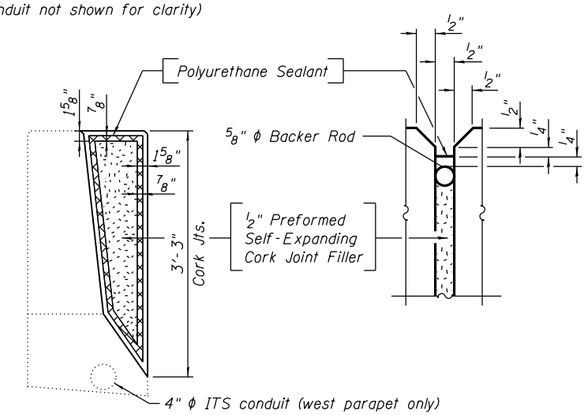

PARAPET JOINT DETAILS

NOTES:

1. For Notes, see Sheet S13-06.

LEGEND:

O.F. Outside Face
I.F. Inside Face
E.E. Each End

HBM ENGINEERING GROUP, LLC	USER NAME = elizabath,kurian	DESIGNED - MAA	REVISED -	STATE OF ILLINOIS DEPARTMENT OF TRANSPORTATION	EAST AND WEST PARAPET - PARTIAL PLAN AND ELEVATION STRUCTURE NO. 016 - 1110
		CHECKED - MAI, JJS	REVISED -		SHEET NO. S13-07 OF S13-09 SHEETS
	PLOT SCALE = N.T.S	DRAWN - MAA,EBK	REVISED -		
	PLOT DATE = 1/29/2020	CHECKED - MAI, JJS	REVISED -		

F.A.I. RTE.	SECTION	COUNTY	TOTAL SHEETS	SHEET NO.
90/94/290	2015-019R	COOK	2155	1493
		CONTRACT NO. 62A76		
	ILLINOIS	FED. AID PROJECT		

FILE NAME: pw:\AECOM-NA-AWS1.aecomonline.local\AECOM_DS02_NA\Documents\01 AmericastTransportation\602699938 CircletPhase_II\000_CAD\008_Structural\Sign Structures\62A76 Sign Structure\62A76-SPAN-SS226-PARAPET_DETAILS.dgn
4:45:22 PM

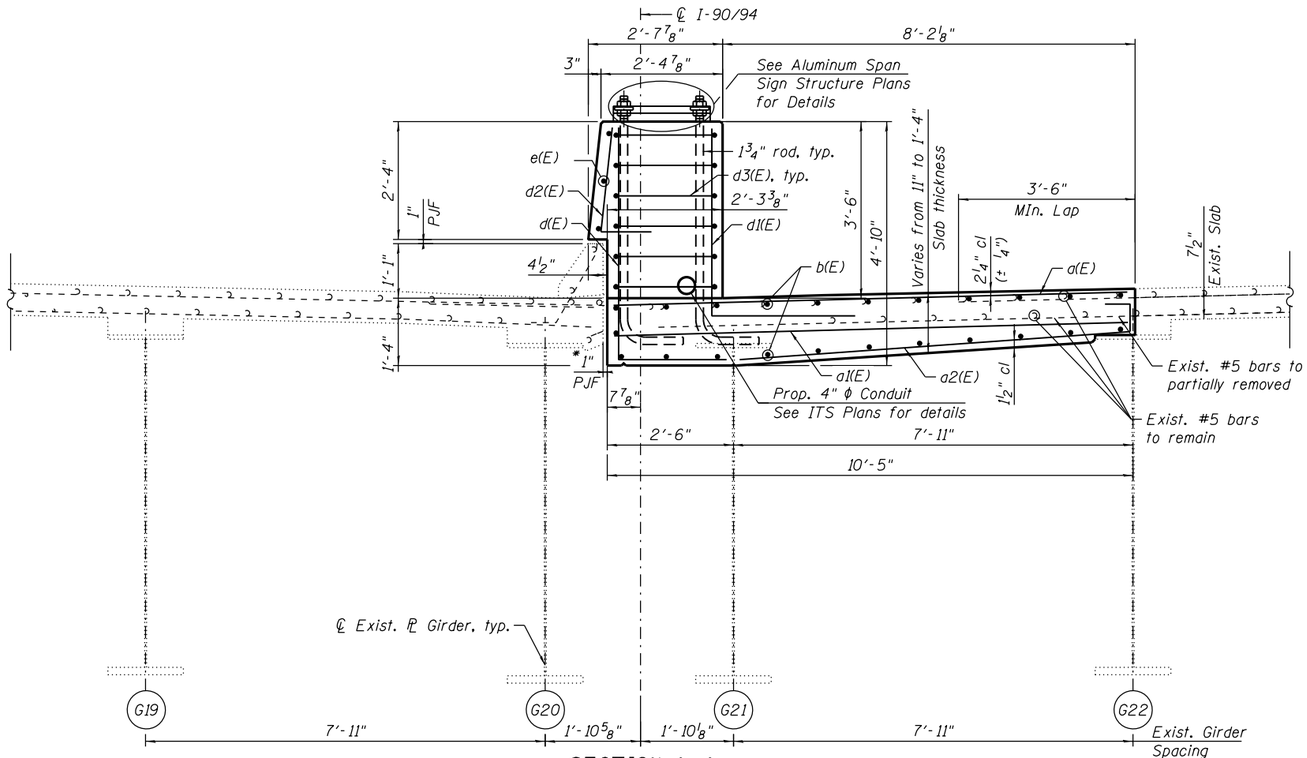

SECTION A-A

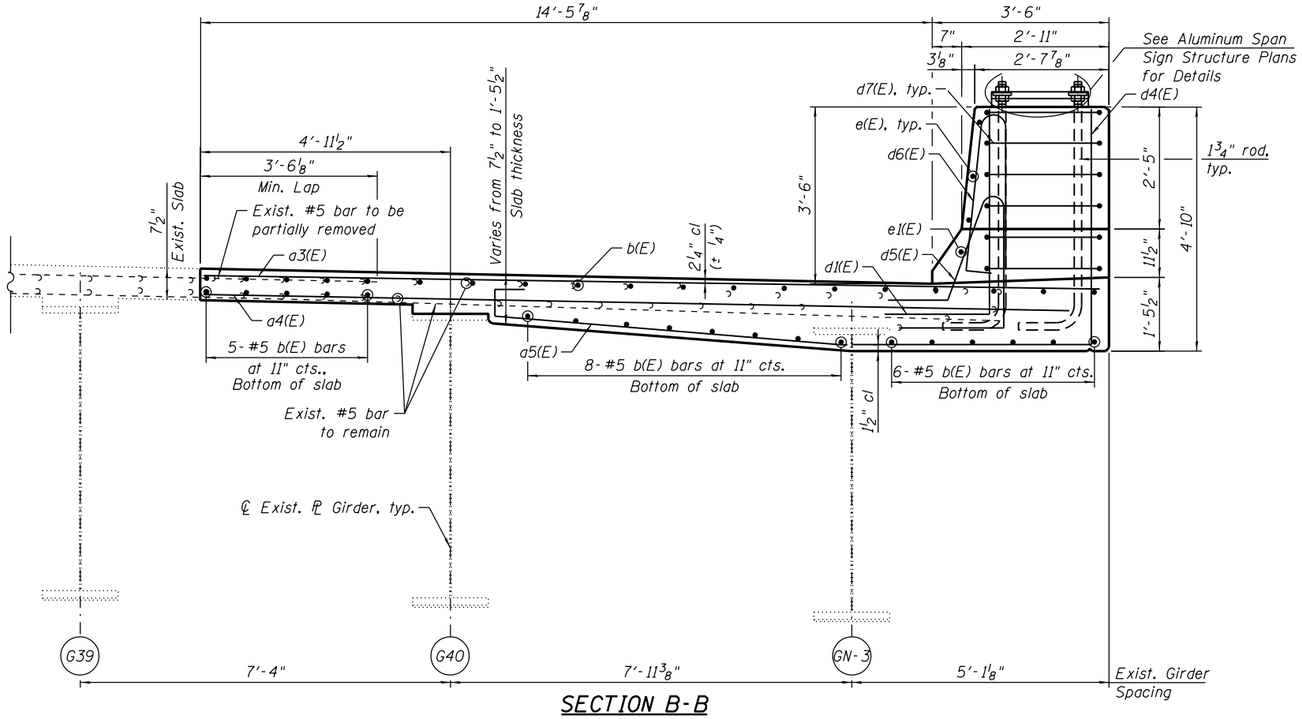

SECTION B-B

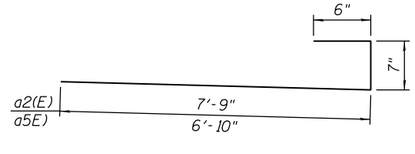

BARS a2(E) AND a5(E)

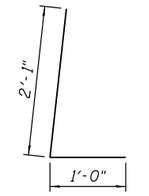

BAR d2(E)

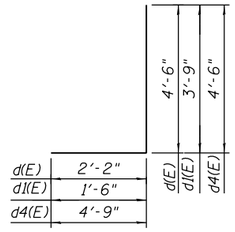

BARS d(E), d1(E) AND d4(E)

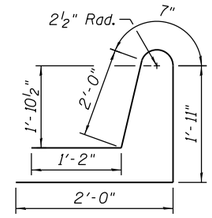

BAR d5(E)

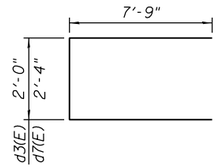

BARS d3(E) and d7(E)

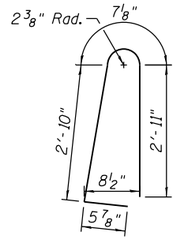

BAR d6(E)

BILL OF MATERIAL

BAR	NO.	Size	Length	Shape
d(E)	29	#6	10'-3"	——
a1(E)	21	#5	10'-3"	——
a2(E)	21	#5	8'-10"	⌐
a3(E)	29	#6	17'-8"	——
a4(E)	21	#5	17'-8"	——
a5(E)	21	#5	7'-11"	⌐
b(E)	60	#5	11'-8"	——
d(E)	13	#6	6'-8"	⌐
d1(E)	34	#6	5'-3"	⌐
d2(E)	13	#5	3'-1"	⌐
d3(E)	12	#6	17'-6"	⊏
d4(E)	13	#6	9'-3"	⌐
d5(E)	13	#6	7'-8"	⌐
d6(E)	13	#6	6'-10"	⊏
d7(E)	12	#6	17'-10"	⊏
e(E)	6	#4	11'-8"	——
e1(E)	1	#8	11'-8"	——
CONCRETE SUPERSTRUCTURE		CU YD	22.8	
BRIDGE DECK GROOVING		SQ YD	28	
PROTECTIVE COAT		SQ YD	61	
REINFORCEMENT BARS, EPOXY COATED		POUND	4,550	

MIN. BAR LAPS

#5	3'-6"
#6	3'-10"

* Cost includes with Concrete Superstructure

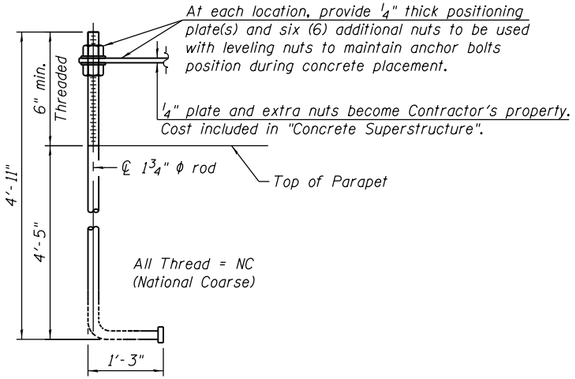

ANCHOR ROD DETAIL

Cost included in Concrete Superstructure.
Anchor rods shall conform to ASTM F1554 Grade 105 Galvanize upper 12" minimum per AASHTO M232. No welding shall be permitted on rods.

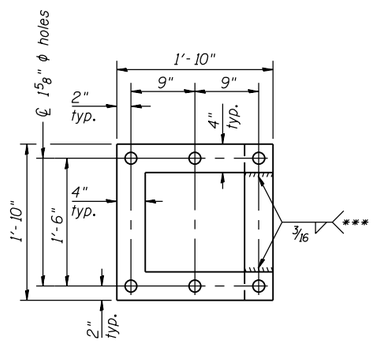

POSITIONING PLATE(S)

***Optionally may use four (4) separate bars. Weld to maintain perpendicularity.

NOTE:

1. For Notes, see Sheet S13-06.

HBM ENGINEERING GROUP, LLC	USER NAME = elizabath.kurian	DESIGNED - MAA, EBK	REVISED -	STATE OF ILLINOIS DEPARTMENT OF TRANSPORTATION	DECK RECONSTRUCTION SECTIONS AND DETAILS STRUCTURE NO. 016 - 1110
		CHECKED - MAI, JJS	REVISED -		
	PLOT SCALE = N.T.S	DRAWN - EBK	REVISED -		SHEET NO. S13-08 OF S13-09 SHEETS
	PLOT DATE = 1/29/2020	CHECKED - MAI, JJS	REVISED -		

F.A.I. RTE.	SECTION	COUNTY	TOTAL SHEETS	SHEET NO.
90/94/290	2015-019R	COOK	2155	1494
		CONTRACT NO. 62A76		
		ILLINOIS	FED. AID PROJECT	

FILE NAME: pw:\\AECOM-NA-AWS1.aecomonline.local:AECOM_DS02_NA\Documents\01 Americas\Transportation\60269938 CirclePhase_II\000_CAD\008_Structural\Sign Structures\62A76 Sign Structure\62A76-SPAN-SS227-DECK_DETAILS.dgn
4:45:44 PM

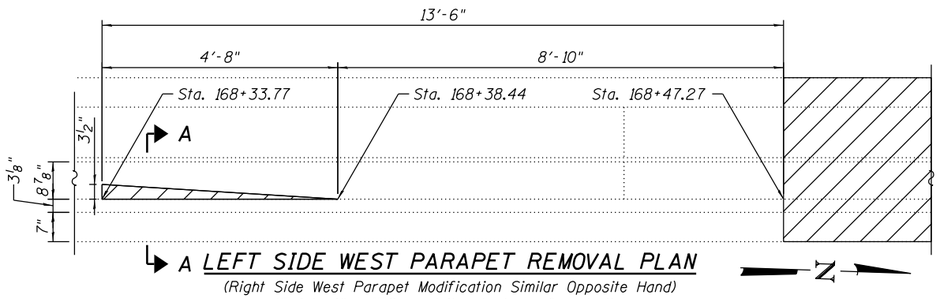

A LEFT SIDE WEST PARAPET REMOVAL PLAN

(Right Side West Parapet Modification Similar Opposite Hand)
(Exist. 4" ϕ ITS conduit not shown for clarity)

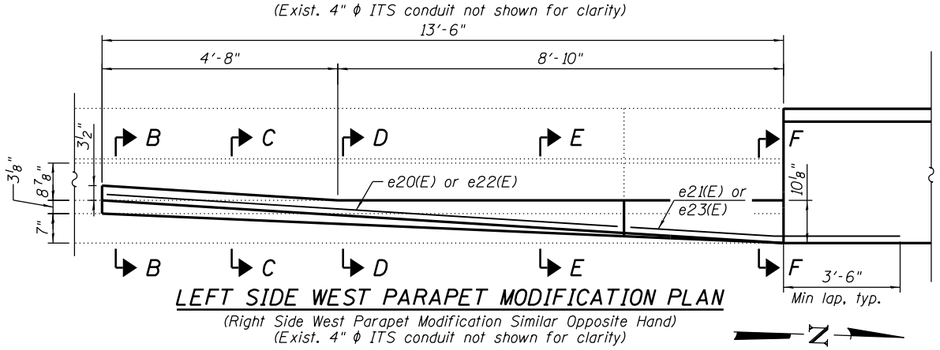

LEFT SIDE WEST PARAPET MODIFICATION PLAN

(Right Side West Parapet Modification Similar Opposite Hand)
(Exist. 4" ϕ ITS conduit not shown for clarity)

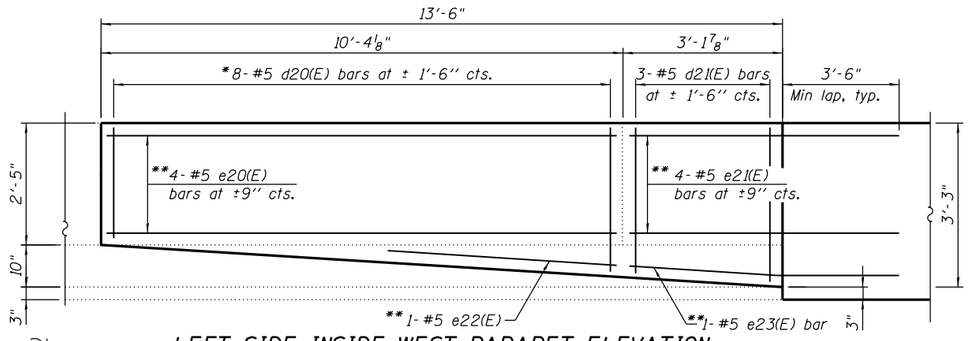

LEFT SIDE INSIDE WEST PARAPET ELEVATION

(Right Side West Parapet Modification Similar Opposite Hand)
(Exist. 4" ϕ ITS conduit not shown for clarity)

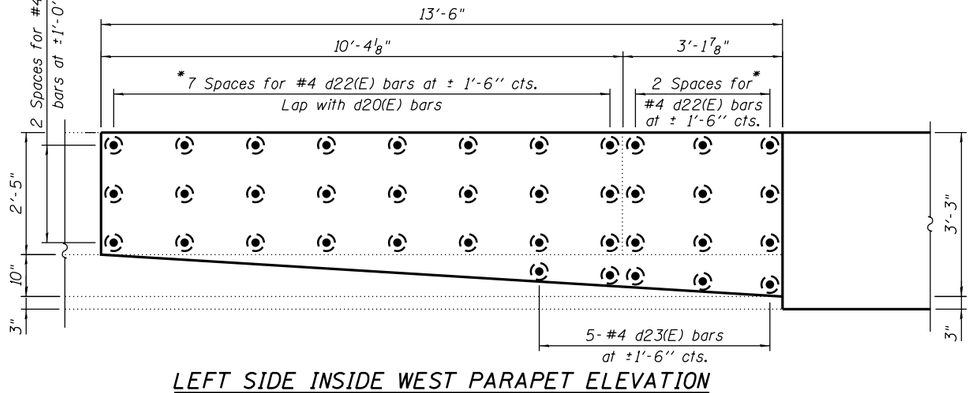

LEFT SIDE INSIDE WEST PARAPET ELEVATION

(Right Side West Parapet Modification Similar Opposite Hand)
(Showing Dowel Bars)
(Exist. 4" ϕ ITS conduit not shown for clarity)

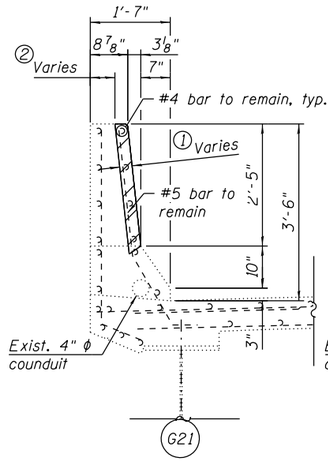

SECTION A-A

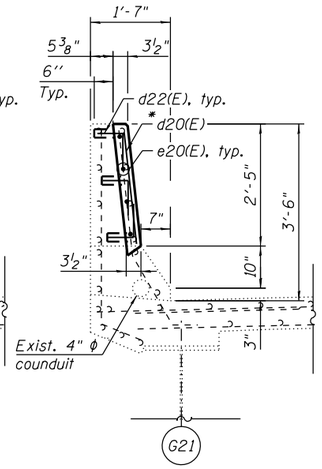

SECTION B-B

(Section at Sta. 168+33.77)

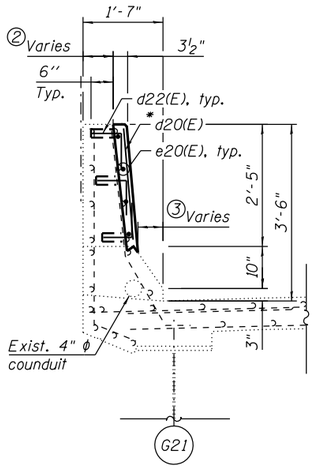

SECTION C-C

BILL OF MATERIAL

Bar	No.	Size	Length	Shape
d20(E)	16	#5	2'-8"	
d21(E)	6	#5	2'-11"	
d22(E)	66	#4	1'-9"	
d23(E)	10	#4	1'-4"	
**e20(E)	8	#5	10'-0"	
**e21(E)	8	#5	6'-6"	
**e22(E)	2	#5	4'-5"	
**e23(E)	2	#5	6'-6"	
Concrete Removal			CU YD	0.2
Concrete Superstructure			CU YD	1.6
Protective Coat			SQ YD	20
Reinforcement Bars, Epoxy Coated			POUND	310

*Cut in field to fit
**Bend in field to fit

MIN. BAR LAPS

#4	2'-5"
#5	3'-6"

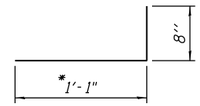

BAR d21(E)

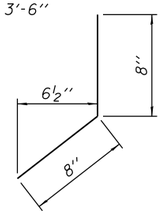

BAR d23(E)

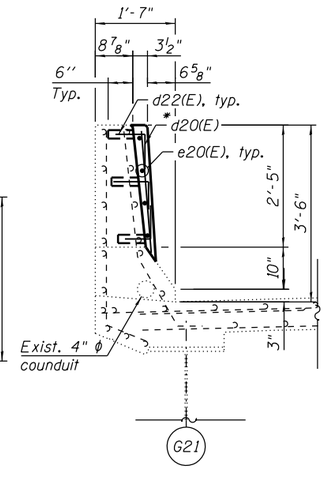

SECTION D-D

(Section at Sta. 168+38.44)

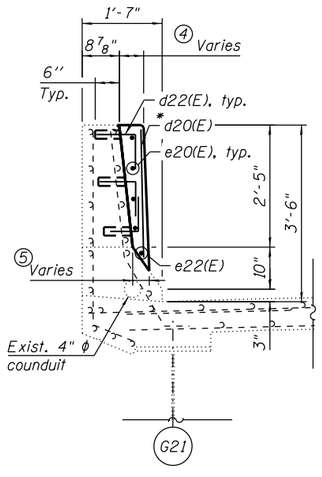

SECTION E-E

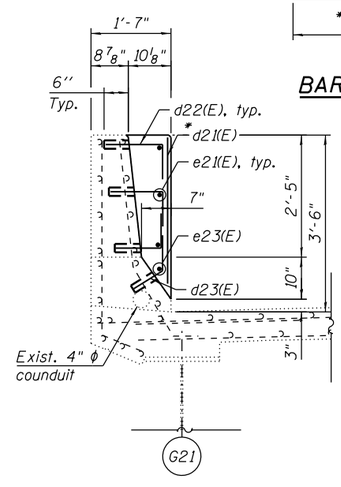

SECTION F-F

(Section at Sta. 168+47.27)

NOTES:

1. Existing reinforcement shall remain during concrete removal.
2. Existing reinforcement bars extending into the removal area shall be cleaned, straightened and incorporated into the new construction. Any reinforcement bars that are damaged during concrete removal shall be replaced with an approved bar splicer or anchorage system. Cost included with Concrete Removal.
3. Epoxy grout d22(E) and d23(E) bars according to Article 584 of the Standard Specifications. Drill to miss existing reinforcement.
4. Prior to drilling for proposed dowel bars, the Contractor shall locate the existing 4" ϕ ITS conduit within the parapet. All drilling shall be performed to miss the existing 4" ϕ ITS conduit to remain. Any damage to the existing conduit caused by the Contractor in the performance of his/her work shall be repaired by the Contractor, to the satisfaction of the Engineer, at no cost to the Department.

LEGEND:

Concrete Removal

FILE NAME: pw:\\AECOM-NA-AWS1.aecomonline.local:AECOM_D502_NA\Documents\01 Americas\Transportation\60269938 CircletPhase_II\000_CAD\008_StructuralSign Structures\62A76 Sign Structure\62A76-SPAN-SS228-ParpMod.dgn
4:45:52 PM

HBM ENGINEERING GROUP, LLC

USER NAME = elizabath.kurian	DESIGNED - MAA, AMS	REVISED -	
	CHECKED - MAI, JJS	REVISED -	
PLOT SCALE = N.T.S	DRAWN - MAA, AMS	REVISED -	
PLOT DATE = 1/29/2020	CHECKED - MAI, JJS	REVISED -	

STATE OF ILLINOIS
DEPARTMENT OF TRANSPORTATION

EXISTING PARAPET MODIFICATION DETAILS
STRUCTURE NO. 016-1110
SHEET NO. S13-09 OF S13-09 SHEETS

F.A.I. RTE.	SECTION	COUNTY	TOTAL SHEETS	SHEET NO.
90/94/290	2015-019R	COOK	2155	1495
		CONTRACT NO. 62A76		
	ILLINOIS FED. AID PROJECT			

FOR INFORMATION ONLY

INDEX OF VOLUMES

VOL. NO	DESCRIPTION	NO. OF SHEETS
	CIVIL	
1.	ROADWAY PLANS & GENERAL SHEETS	127
2.	MAINTENANCE OF TRAFFIC & ROADWAY CROSS SECTIONS	45
	STRUCTURAL	
3.	STRUCTURE NO. 016-0137 (MAXWELL ST. TO 15TH ST.)	65
4.	STRUCTURE NO. 016-1110 (15TH ST. TO 16TH ST.)	33
5.	STRUCTURE NO. 016-1111 (16TH ST. TO 18TH ST.)	51
6.	STRUCTURE NO. 016-1112 (18TH ST. TO CERMAK RD.)	91
7.	STRUCTURE NO. 016-1113 (CERMAK RD. TO CHICAGO RIVER)	88
8.	STRUCTURE NO. 016-1114 & 1070 (CHICAGO RIVER BRIDGE)	16
9.	STRUCTURE NO. 016-1115 (I-55 INTERCHANGE-MAINLINE)	101
10.	STRUCTURE NO. 016-1047 & 1140 (I-55 INTERCHANGE-RAMPS)	53
11.	STRUCTURE NO. 016-1116 (CANAL ST. TO STEWART AVE.)	21
12.	STRUCTURE NO. 016-1117 & 1118 (STEWART AVE. TO 28TH PL.)	98
13.	MISCELLANEOUS VIADUCT DETAILS AND SOUTH TERMINUS RETAINING WALLS	88
	ELECTRICAL	
14	ROADWAY LIGHTING & SURVEILLANCE	49
	TOTAL	926

STATE OF ILLINOIS
DEPARTMENT OF TRANSPORTATION
DIVISION OF HIGHWAYS

PLANS FOR PROPOSED FEDERAL AID INTERSTATE HIGHWAY

SCALES: PLAN 1 INCH = * FEET; PROFILE HORIZ. 1 INCH = * FEET; PROFILE VERT. 1 INCH = * FEET; CROSS SECTIONS 1 INCH = * FEET HORIZONTAL, 1 INCH = * FEET VERTICAL. * SEE PLANS

VOLUME NO. 4

F.A.I. ROUTE 90/94 (DAN RYAN EXPRESSWAY)

SECTION 1985-077 R

~~PROJECT~~

COOK COUNTY

~~C-91-430-85~~

NORTHBOUND MAINLINE RECONSTRUCTION
28TH PL. TO MAXWELL ST.

F.A. RTE.	SECTION	COUNTY	TOTAL SHEETS	SHEET NO.
90/94	*	COOK	33	1

*1985-077 BR
P-91-179-84

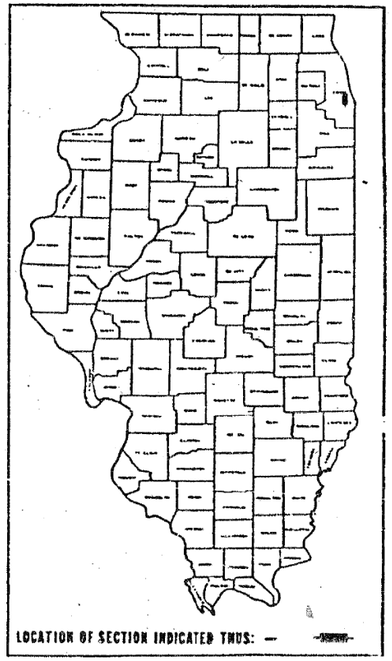

LOCATION OF SECTION INDICATED THUS: —

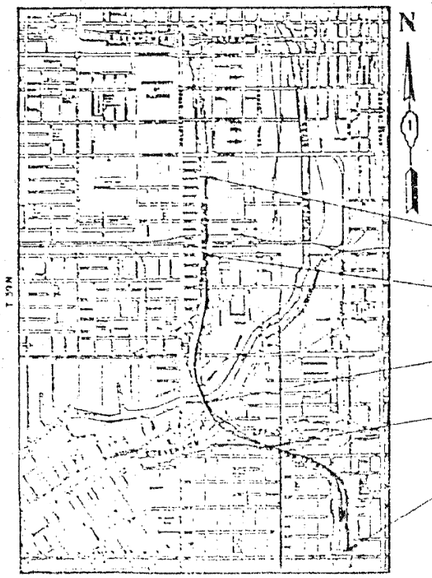

END STA 183+87.100
STA EQ 183+87.10 (BK) = STA 183+13.36 (AH)

STA EQ 165+08.650 (BK) = STA 164+94.890 (AH)

STA EQ 122+01.688 (BK) = STA 123+47.028 (AH)

STA EQ 103+85.412 (BK) = STA 103+85.570 (AH)

BEGIN STA 63+20.000

NET LENGTH = 11,934 FT. = 2.260 MILES
GROSS LENGTH = 11,934 FT. = 2.260 MILES

DESIGN DESIGNATION

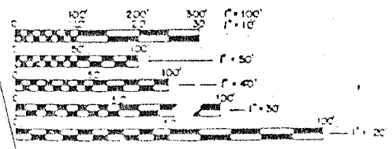

FULL SIZE PLANS HAVE BEEN PREPARED USING STANDARD ENGINEERING SCALES. REDUCED SIZED PLANS WILL NOT CONFORM TO STANDARD SCALES IN MAKING MEASUREMENTS REDUCED PLANS, THE ABOVE SCALES MAY BE USED

CONTRACT NO. 80065

STATE OF ILLINOIS
DEPARTMENT OF TRANSPORTATION
DIVISION OF HIGHWAYS

SUBMITTED _____ 19__ DISTRICT ENGINEER
EXAMINED _____ 19__ DIRECTOR OF PLANS AND LANDRIGHTS
PASSED _____ 19__ CHIEF ENGINEER OF DESIGN
APPROVED _____ 19__ DIRECTOR BUREAU OF HIGHWAYS

DEPARTMENT OF TRANSPORTATION
FEDERAL HIGHWAY ADMINISTRATION

DIVISION ENGINEER _____ DATE _____

⚠ 12-1-1988

HBM ENGINEERING GROUP, LLC	USER NAME = francisco.lopez	DESIGNED - JMI	REVISED -	STATE OF ILLINOIS DEPARTMENT OF TRANSPORTATION	EXISTING RECORD DRAWINGS STRUCTURE NO. 016-1110
		CHECKED - MAI, JJS	REVISED -		
	PLOT SCALE = N.T.S	DRAWN - JMI	REVISED -		
	PLOT DATE = 1/24/2020	CHECKED - MAI, JJS	REVISED -		SHEET NO. AS13-01 OF AS13-82 SHEETS

F.A.I. RTE.	SECTION	COUNTY	TOTAL SHEETS	SHEET NO.
90/94/290	2015-019R	COOK	2155	1496
		CONTRACT NO. 62A76		
	ILLINOIS	FED. AID PROJECT		

FILE NAME: pw:\AECOM-NA-AWS1.aecomonline.local\AECOM_DS02_NA\Documents\01 Americas\Transportation\60269938 Circle\Phase_II\000_CAD\008_Structural\Sign Structures\62A76 Sign Structure\62A76-Span-SS229-Existplans.dgn
10:58:54 AM

FOR INFORMATION ONLY

FEDERAL AID ROUTE NO.	SECTION	COUNTY	TOTAL SHEETS	SHEET NO.
90/94	*	COOK	33	2
STA.		TO STA.		
FED. RD. DIST. NO.	ILLINOIS	FED. AID PROJECT		

* 1985-077 BR

PLAN DIMENSIONS AND DETAILS RELATIVE TO EXISTING STRUCTURE WERE OBTAINED FROM EXISTING PLANS

⚠ AND ARE SUBJECT TO MINIMAL CONSTRUCTION VARIATIONS. IT SHALL BE THE CONTRACTOR'S RESPONSIBILITY TO VERIFY SUCH DIMENSIONS AND DETAILS IN THE FIELD AND MAKE NECESSARY APPROVED ADJUSTMENTS PRIOR TO CONSTRUCTION OR ORDERING OF MATERIALS. SUCH VARIATION SHALL NOT BE CAUSE FOR ADDITIONAL COMPENSATION FOR A CHANGE IN THE SCOPE OF WORK, HOWEVER, THE CONTRACTOR WILL BE PAID FOR THE QUANTITY ACTUALLY FURNISHED AT THE UNIT PRICE BID FOR THE WORK.

CALCULATED WEIGHT OF STRUCTURAL STEEL = M-183 = 402,310 LBS. (TO BE ERECTED)

CALCULATED WEIGHT OF STRUCTURAL STEEL REMOVAL = 144,877 LBS. (TO BE REMOVED)

THE MAIN LOAD CARRYING MEMBER COMPONENTS SUBJECT TO TENSILE STRESSES SHALL CONFORM TO THE SUPPLEMENTAL REQUIREMENTS FOR FRACTURE TOUGHNESS ZONE 2. THESE COMPONENTS INCLUDE TENSION FLANGES AND WEBS OF PLATE GIRDERS, WIDE FLANGE BEAMS AND ALL SPLICE PLATES MATERIAL OF THE WELDED PLATE GIRDERS AND ARE DESIGNATED ON THE PLANS BY "F.T.R.".

REINFORCEMENT BARS SHALL CONFORM TO THE REQUIREMENTS OF AASHTO M-31, M-42 OR M-53 GRADE 60.

REINFORCEMENT BARS NOTED (E) SHALL BE EPOXY COATED.

FIELD WELDING OF CONSTRUCTION ACCESSORIES WILL NOT BE PERMITTED TO THE BOTTOM FLANGE OF BEAMS OR GIRDERS NOR TO THE TOP FLANGE FOR A DISTANCE EQUAL TO ONE-FOURTH THE SPAN LENGTH EACH WAY FROM THE PIER SUPPORTS. FIELD WELDING IN OTHER AREAS WILL BE PERMITTED ONLY WHEN APPROVED BY THE ENGINEER.

ANCHOR BOLTS SHALL BE SET BEFORE INSTALLING DIAPHRAGMS OR CROSS FRAMES OVER SUPPORTS.

FASTENERS SHALL CONFORM TO THE REQUIREMENT OF AASHTO M164 TYPE I (ASTM A325). ALL FASTENERS SHALL BE 7/8" DIAMETER UNLESS OTHERWISE NOTED AND IN 15/16" DIAMETER BOLT HOLES. BOLT HOLES SHALL BE DRILLED 1-1/16" DIAMETER FOR 7/8" DIAMETER BOLTS AT CROSS FRAME CONNECTIONS. DIAPHRAGMS SHALL BE CONNECTED WITH 7/8" DIAMETER BOLTS AND BOLT HOLES SHALL BE PREDRILLED TO 15/16" DIAMETER. HARDENED WASHERS SHALL BE USED FOR ALL CROSS FRAME AND DIAPHRAGM CONNECTION.

EXPANSION JOINTS SHALL CONSIST OF APPROVED EXPANSION ANCHORS, PROVIDING MINIMUM CERTIFIED PROOF LOAD = 4,080 LBS., AND 3/4" DIAMETER X 1'-" EMBED BOLTS.

ROADWAY EXPANSION GUARDS SHALL BE ASSEMBLED IN THE PROPER POSITION WITH THE ENDS IN PLACE AND SHALL BE LEFT ASSEMBLED FOR SHOP INSPECTION.

THE ROADWAY EXPANSION JOINTS SHALL BE FLAME CUT AS PROVIDED IN ARTICLE 507.04(1) OF THE STANDARD SPECIFICATIONS.

BEARING SEAT SURFACES SHALL BE CONSTRUCTED OR ADJUSTED TO THE DESIGNATED ELEVATIONS WITHIN A TOLERANCE OF 1/8 INCH. ADJUSTMENT SHALL BE MADE EITHER BY GRINDING THE SURFACE OR BY SHIMMING THE BEARINGS. "M" 1/8" ADJUSTING SHIMS, OF THE DIMENSIONS OF THE BOTTOM BEARING PLATE, SHALL BE PROVIDED FOR EACH BEARING IN ADDITION TO ALL OTHER PLATES OR SHIMS. (FOR TYPE I ELASTOMERIC BEARINGS, SHIMS OF THE DIMENSIONS OF TOP PLATE BE PROVIDED AND PLACED AS DETAILED).

STUD SHEAR CONNECTORS

STUD SHEAR CONNECTORS SHALL CONFORM TO THE REQUIREMENTS OF AASHTO M169 COLD DRAWN BARS, GRADES 1015, 1018 OR 1020 EITHER SEMI-OR FULLY-KILLED, GRANULA SOLID FLUX FILLED HEADED STUD AUTOMATICALLY END WELDED STUD SHEAR CONNECTORS SHALL BE INSTALLED IN ACCORDANCE WI ARTICLE 507.08(a). MATERIAL SHALL CONFORM TO ASTM A TION 38 OF STD SPECS

NOTES FOR NEW CONCRETE PIERS

A) THE CONTRACTOR SHALL SPACE REINFORCEMENT BARS IN PIER CAP TO MISS ANCHOR BOLTS.

B) ALL EXPOSED EDGES TO HAVE STANDARD 3/4 INCH CHAMFERS, EXCEPT NOTED OTHERWISE.

FIELD CLEANING AND PAINTING

1) EXISTING STRUCTURAL STEEL SURFACES IN CONTACT WITH NEW STRUCTURAL STEEL SHALL BE FIELD CLEANED IN ACCORDANCE WITH ARTICLE 509.06(b) METHOD III. SURFACES BLAST CLEANED TO RECEIVE NEW STRUCTURAL STEEL SHALL BE PAINTED WITH ONE COAT LEAD AND CHROMATE FREE ALKYD PAINT PRIMER. CONTACT SURFACES SHALL NOT BE PAINTED.

2) EXISTING TOP FLANGE SURFACES IN CONTACT WITH NEW CONCRETE SHALL BE CLEANED IN ACCORDANCE WITH ARTICLE 509.06(b), METHOD III.

3) SURFACES TO RECEIVE STUD SHEAR CONNECTORS SHALL BE CLEANED IN ACCORDANCE WITH ARTICLE 509.06(b), METHOD II AND ARTICLE 507.08(a)(2).

4) NEW STRUCTURAL STEEL SHALL BE SPOT PAINTED WITH ZINC SILICATE PRIMER APPLIED ON HEADS OF FIELD BOLTS, FIELD WELDS, AND ALL AREAS WHERE PAINT HAS BEEN REMOVED OR DAMAGED.

STATION 164+9489
REBUILT 1989 BY
STATE OF ILLINOIS
F.A. PROJ. IDR-RCSR-90-3(270)
LOADING HS20
STR. NO. 016-1110

NAME PLATE
(See Std. 2113)

LOAD FOR TEMPORARY SUPPORT		
BEARING LINE	D.L. REACTION	L.L. REACTION
1S (Mainline)	37*	—
1N (Mainline)	84*	—
1S (Ramp E)	20*	—
1N (Ramp E)	40*	—
4S	345*	—
4N	111*	—

NOTE: 2. Reduce the values the weight of form joists only.

⚠ 12-1-88

SHEET No.	INDEX	
1	B1	TITLE SHEET
2	B2	GENERAL NOTES, INDEX & BILL OF MATERIAL
3	B3	GENERAL PLAN
4	B4	PIER REMOVAL & PIER 2 DETAILS
5-6	B5-B6	PIER REPLACEMENT DETAILS
7	B7	SUBSTRUCTURE BAR SCHEDULE
8-9	B8-B9	FRAMING PLANS
10	B10	STRESS TABLE
11-17	B11-B17	STRUCTURAL STEEL DETAILS
18	B18	TRANSVERSE DECK JOINT ELEVATIONS
19-22	B19-B22	TOP OF SLAB ELEVATIONS
23-27	B23- 2	DECK PLAN, CROSS SECTION & PARAPET DETAILS
28	B28	DECK BAR SCHEDULE
31-33	B31-B33	SUBSTRUCTURE WIDENING, REHABILITION & REPLACEMENT

TOTAL BILL OF MATERIAL

ITEM	UNIT	TOTAL
*STRUCTURE EXCAVATION	CU. YD.	33.0
*CONCRETE REMOVAL	CU. YD.	271.0
*CONCRETE REMOVAL (SPECIAL)	CU. YD.	8.1
*REMOVAL OF EXISTING CONCRETE DECK	L. SUM	.059
*EXPANSION BOLTS 3/8 INCH DIA.	EACH	36
*PROTECTIVE SHIELD	SQ. YD.	6811.0
*CLASS "X" CONCRETE	CU. YD.	311.7
*CLASS "X" CONCRETE SUPERSTRUCTURE	CU. YD.	1798.8
PREFORMED JOINT SEAL 2 1/2 INCH	LIN. FT.	25.2
*NEOPRENE EXPANSION JOINT 2 INCH	LIN. FT.	25.2
*NEOPRENE EXPANSION JOINT 4 INCH	LIN. FT.	25.2
** PROTECTIVE COAT	SQ. YD.	971.8
EPOXY CRACK SEALING	LIN. FT.	152
⚠ *FORMED CONCRETE REPAIR (≤ 5" depth)	SQ. FT.	104
*FORMED CONCRETE REPAIR (> 5" depth)	SQ. FT.	150
*PROTECTIVE SURFACE TREATMENT	SQ. FT.	27,998
*MECHANICAL SPLICERS	EACH	176
*REINFORCEMENT BARS (EPOXY COATED)	POUND	586,800
*ERECTING STRUCTURAL STEEL	L. SUM	.072
STUD SHEAR CONNECTORS	EACH	23,298
*STRUCTURAL STEEL REPAIR	POUND	1098
⚠ *STRUCTURAL STEEL REMOVAL	L. SUM	.105
*RELOCATING EXISTING STEEL STRINGERS	POUND	113,854
*REINFORCED NEOPRENE EXPANSION JT. TREATMENT	LIN. FT.	198.5
*INSTALLING BRIDGE SCUPPERS	EACH	19
*DOWNSPOUT DRAINAGE SYSTEM	LIN. FT.	1278
*NAME PLATES	EACH	1
*TEMPORARY SUPPORT SYSTEM (HEIGHT > 30 FT.)	EACH	2
*DRILL AND GROUT #11 BARS	EACH	20

* SPECIAL PROVISIONS
** QUANTITY DOES NOT INCLUDE BRIDGE DECK SURFACE

NOTE: Finish paint included in "Erecting Structural Steel".

SHEET B2 OF B33

REVISIONS	
Name	Date

STATE OF ILLINOIS
DEPARTMENT OF TRANSPORTATION
F.A.I. ROUTE 90/94 DAN RYAN EXPRESSWAY
SECTION 1985-077BR COOK COUNTY
N.B. MAINLINE RECONSTRUCTION
STRUCTURE 016-1110
GENERAL NOTES, INDEX & BILL OF MATERIAL

Scale: NONE — Drawn By: AV
Date: AUGUST 1988 — Checked By: S.E.K.

ENVIRODYNE ENGINEERS INC.
Chicago, Illinois

HBM ENGINEERING GROUP, LLC	USER NAME = francisco.lopez	DESIGNED - JMI	REVISED -	STATE OF ILLINOIS DEPARTMENT OF TRANSPORTATION	EXISTING RECORD DRAWINGS STRUCTURE NO. 016-1110
		CHECKED - MAI, JJS	REVISED -		
	PLOT SCALE = N.T.S	DRAWN - JMI	REVISED -		
	PLOT DATE = 1/24/2020	CHECKED - MAI, JJS	REVISED -		SHEET NO.AS13-02 OF AS13-82SHEETS

F.A.I. RTE.	SECTION	COUNTY	TOTAL SHEETS	SHEET NO.
90/94/290	2015-019R	COOK	2155	1497
		CONTRACT NO. 62A76		
	ILLINOIS	FED. AID PROJECT		

FILE NAME= pw:\\AECOM-NA-AWS1.aecomonline.local\AECOM_DS02_NA\Documents\01 Americas\Transportation\60269938 Circle\Phase_II\000_CAD\008_Structural\Sign Structures\62A76 Sign Structure\62A76-Span-S5229-Existplans.dgn

10:58:59 AM

FOR INFORMATION ONLY

FEDERAL AID ROUTE NO	SECTION	COUNTY	TOTAL SHEETS	SHEET NO
90/94	*	COOK	33	3
STA.		TO STA.		
FED. RD. DIST. NO	ILLINOIS	FED. AID PROJECT		

* 1985-077 BR

BENCH MARK:

T.B.M. #49 North NE flange bolt on hydrant on NW Corner of 21st St. and Emerald St. Elev. 13.69

EXISTING STRUCTURE

Structure No. 016-1110 is a part of Dan Ryan Expressway Viaduct. The superstructure is concrete deck supported on steel plate girders. The mainline structure consists of two units having three continuous spans each. The entrance and exit ramp structures have simple spans at each end with cantilever extending into center span to support center span on steel bearings. The substructure consists of multiple column concrete piers supported on concrete caissons. The structure was built in 1961 and opened to traffic in 1962.

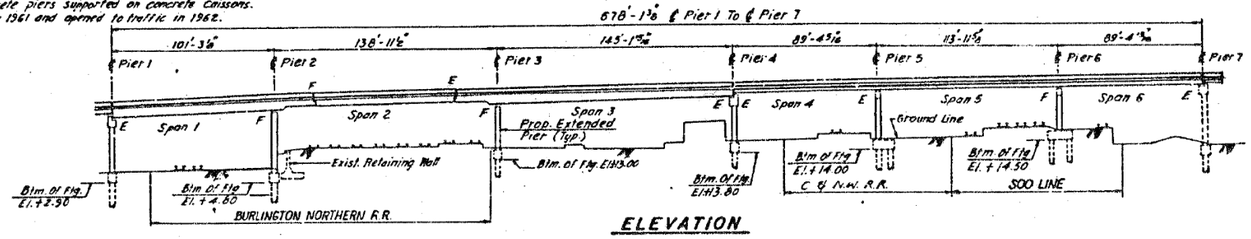

ELEVATION

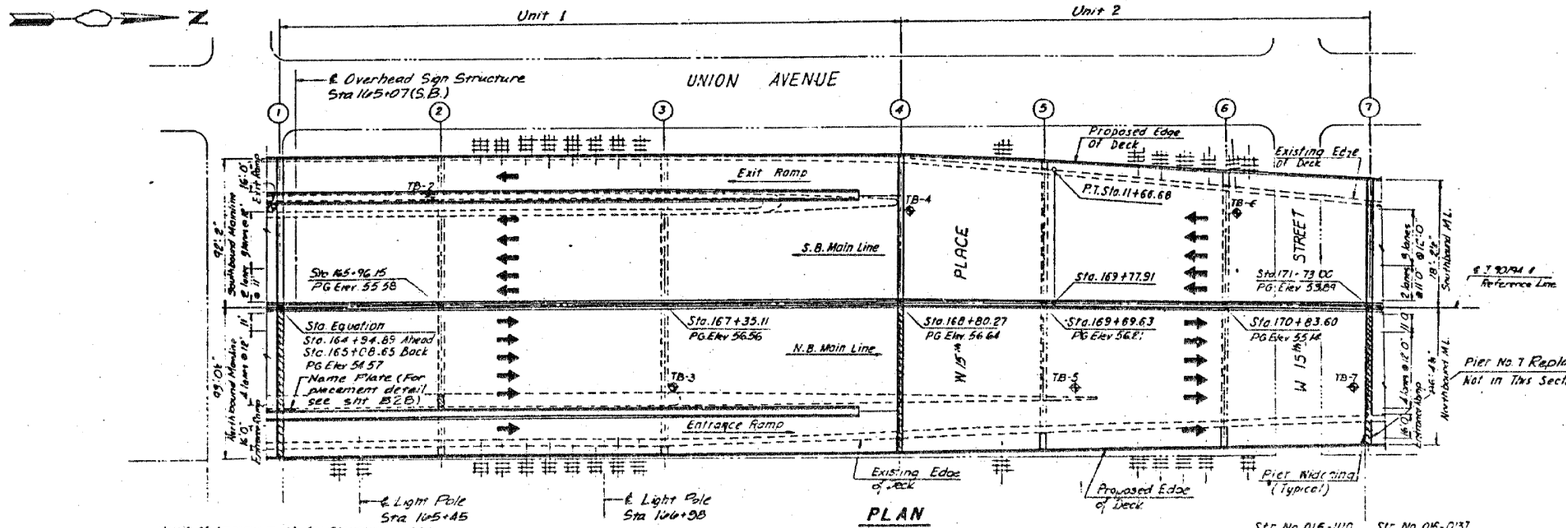

PLAN

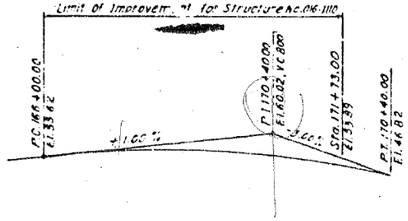

PROPOSED PROFILE GRADE

DAN RYAN EXPRESSWAY (I-90/94)

Design Stresses

New Construction

f'c = 3500 PSI
fc = 1400 PSI
fy = 60,000 PSI (Reinforcement)
fs = 20,000 PSI
Working Stress Design Method
Allowable Bearing Pressure on Rock 60 Tons/Sq. Ft.

Loading M 20-44 or H

Design Specifications AASHTO (1983) And Applicable Interims (1984, 1985 Inclusive)

Existing Construction

f'c = 3500
fc = 1400 W/C Earth Pressure
fc = 1,000 PSI W/Earth Pressure
V = 75 PSI Max. Shear in Footings
fs = 20,000 PSI
Bedrock Bearing for Dated Sub-Piers = 60 Tons/Sq. Ft.

LEGEND

- Indicates Existing Soil Borings
- New Pier Replacement or Widening, Completed in Previous Contract
- Indicates Pier No.
- Pier Replacement or Widening

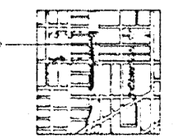

LOCATION PLAN

N

RALPH E. SMITH 81 3631 — Ralph E. Smith

APPROVED
FOR STRUCTURAL ADEQUACY ONLY
James T. Rayburn

SHEET 83 OF 833

REVISIONS	
Name	Date

STATE OF ILLINOIS
DEPARTMENT OF TRANSPORTATION
F.A.I. ROUTE 90/94 (DAN RYAN EXPRESSWAY)
SECTION 1985 - 077BR - COOK COUNTY
N.B. MAINLINE RECONSTRUCTION
STRUCTURE NO 016-1110
GENERAL PLAN

Scale: NONE — Drawn By: M. H.
Date: AUG. 1988 — Checked By: M. E. H.

EMPIRE ENGINEERS INC.
Chicago, Illinois

HBM ENGINEERING GROUP, LLC				
USER NAME = francisco.lopez	DESIGNED - JMI	REVISED -	STATE OF ILLINOIS DEPARTMENT OF TRANSPORTATION	EXISTING RECORD DRAWINGS STRUCTURE NO. 016-1110
	CHECKED - MAI, JJS	REVISED -		
PLOT SCALE = N.T.S	DRAWN - JMI	REVISED -		
PLOT DATE = 1/24/2020	CHECKED - MAI, JJS	REVISED -		SHEET NO.AS13-03 OF AS13-82SHEETS

F.A.I. RTE.	SECTION	COUNTY	TOTAL SHEETS	SHEET NO.
90/94/290	2015-019R	COOK	2155	1498
		CONTRACT NO. 62A76		
	ILLINOIS	FED. AID PROJECT		

FILE NAME: pw:\\AECOM-NA-AWS1.aecomonline.local:AECOM_D502_NAIDocuments\01 Americas\Transportation\60269938 Circle\Phase_II\000_CAD\008_Structural\Sign Structures\62A76 Sign Structure\62A76-Span-SS229-Existplans.dgn

10:59:04 AM

FOR INFORMATION ONLY

FEDERAL AID ROUTE NO.	SECTION	COUNTY	TOTAL SHEETS	SHEET NO.
90/94	*	COOK	33	4
STA.		TO STA.		
FED. RD. DIST. NO.	ILLINOIS	FED. AID PROJECT		

* SECTION 1985-077 BR

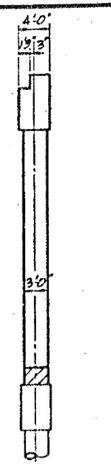

SECTION A-A

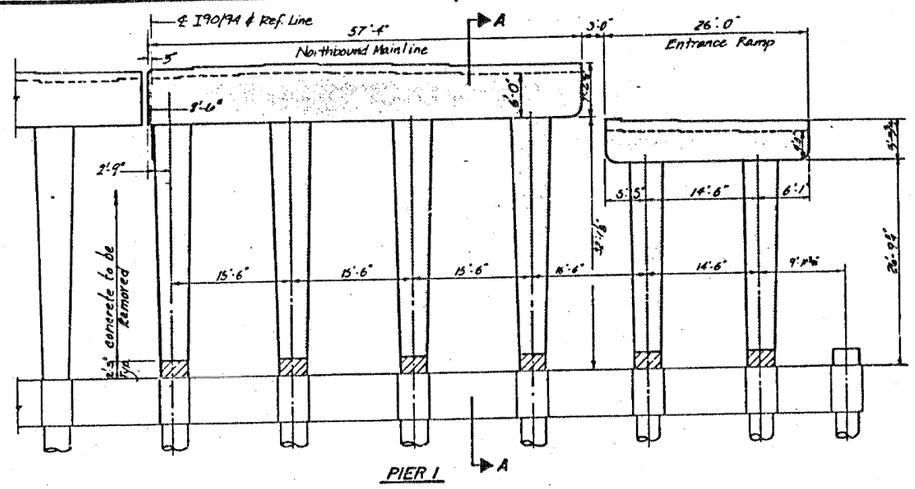

PIER 1

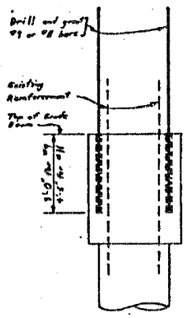

Drill and Grout #9 or #11 bars

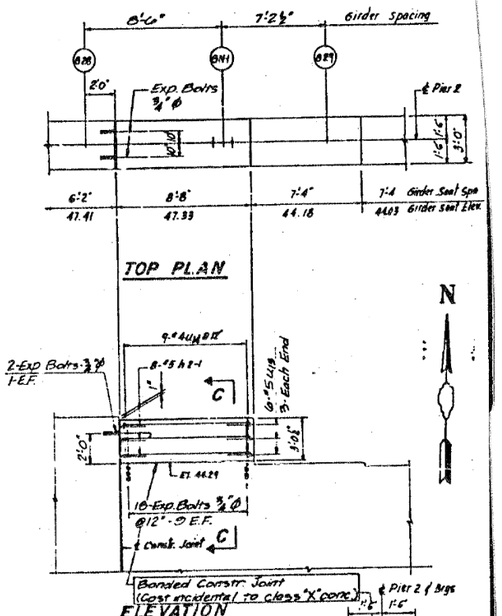

TOP PLAN

ELEVATION

PIER NO. 2

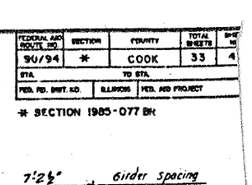

SECTION C-C

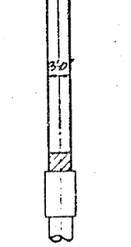

SECTION B-B

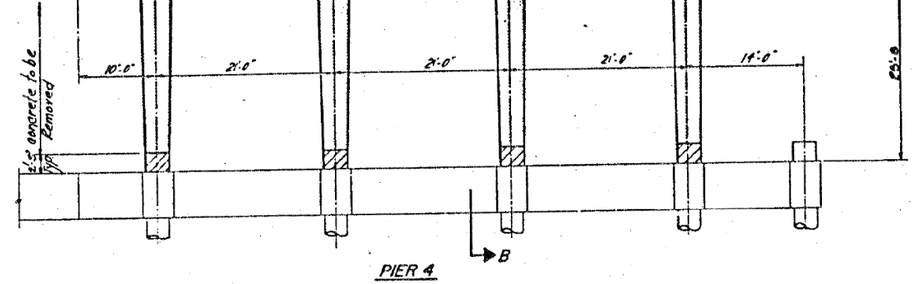

PIER 4

Two Component Nonsagging grey ceiling compound with polysulfide liquid polymer Gun grade with primer (Cost incidental to class "X" concrete.)

2" Concrete Nails (Cost incidental to class "X" concrete.)

1" Premolded Joint filler (Cost incidental to class "X" concrete.)

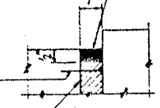

DETAIL D

BILL OF MATERIAL

ITEM	UNIT	PIER NO. 2
Reinforcement Bars (Epoxy Coated)	Lbs.	160
Class "X" Concrete	Cu Yd	2.9
Expansion Bolts ¾"ø	Each	20

BILL OF MATERIAL

SYMBOL	ITEM	UNIT	QUANTITY
	Concrete Removal	Cu Yds.	273.0
	Conc. Removal Special	Cu Yds.	7.2

SHEET 84 OF 833

REVISIONS	
Name	Date

STATE OF ILLINOIS
DEPARTMENT OF TRANSPORTATION
F.A.I. ROUTE 90/94 (DAN RYAN EXPRESSWAY)
SECTION 1985-077 BR. COOK COUNTY
N. B. MAINLINE RECONSTRUCTION
STRUCTURE 016 - 1110
PIER REMOVAL & PIER 2

Scale : NONE
Date : AUG. 1988
Drawn By: ATS
Checked By: M.E.M.

ENVIRODYNE ENGINEERS INC.
Chicago, Illinois

FILE NAME: pw:\\AECOM-NA-AWS1.aecomonline.local\AECOM_D502_NA\Documents\01 Americas\Transportation\60269938 CirclePhase_II\000_CADD\008_Structural\Sign Structures\62A76 Sign Structure\62A76-Span-S5229-Existplans.dgn
10:59:09 AM

HBM ENGINEERING GROUP, LLC

USER NAME = francisco.lopez	DESIGNED - JMI	REVISED -
	CHECKED - MAI, JJS	REVISED -
PLOT SCALE = N.T.S	DRAWN - JMI	REVISED -
PLOT DATE = 1/24/2020	CHECKED - MAI, JJS	REVISED -

STATE OF ILLINOIS
DEPARTMENT OF TRANSPORTATION

EXISTING RECORD DRAWINGS
STRUCTURE NO. 016-1110
SHEET NO.AS13-04 OF AS13-82SHEETS

F.A.I. RTE.	SECTION	COUNTY	TOTAL SHEETS	SHEET NO.
90/94/290	2015-019R	COOK	2155	1499
		CONTRACT NO. 62A76		
	ILLINOIS	FED. AID PROJECT		

FOR INFORMATION ONLY

FEDERAL AID ROUTE NO.	SECTION	COUNTY	TOTAL SHEETS	SHEET NO.
90/94	*	COOK	33	5
STA.		TO STA.		
FED. ... DIST. NO.	ILLINOIS	FED. AID PROJECT		

* 1985-077 BR

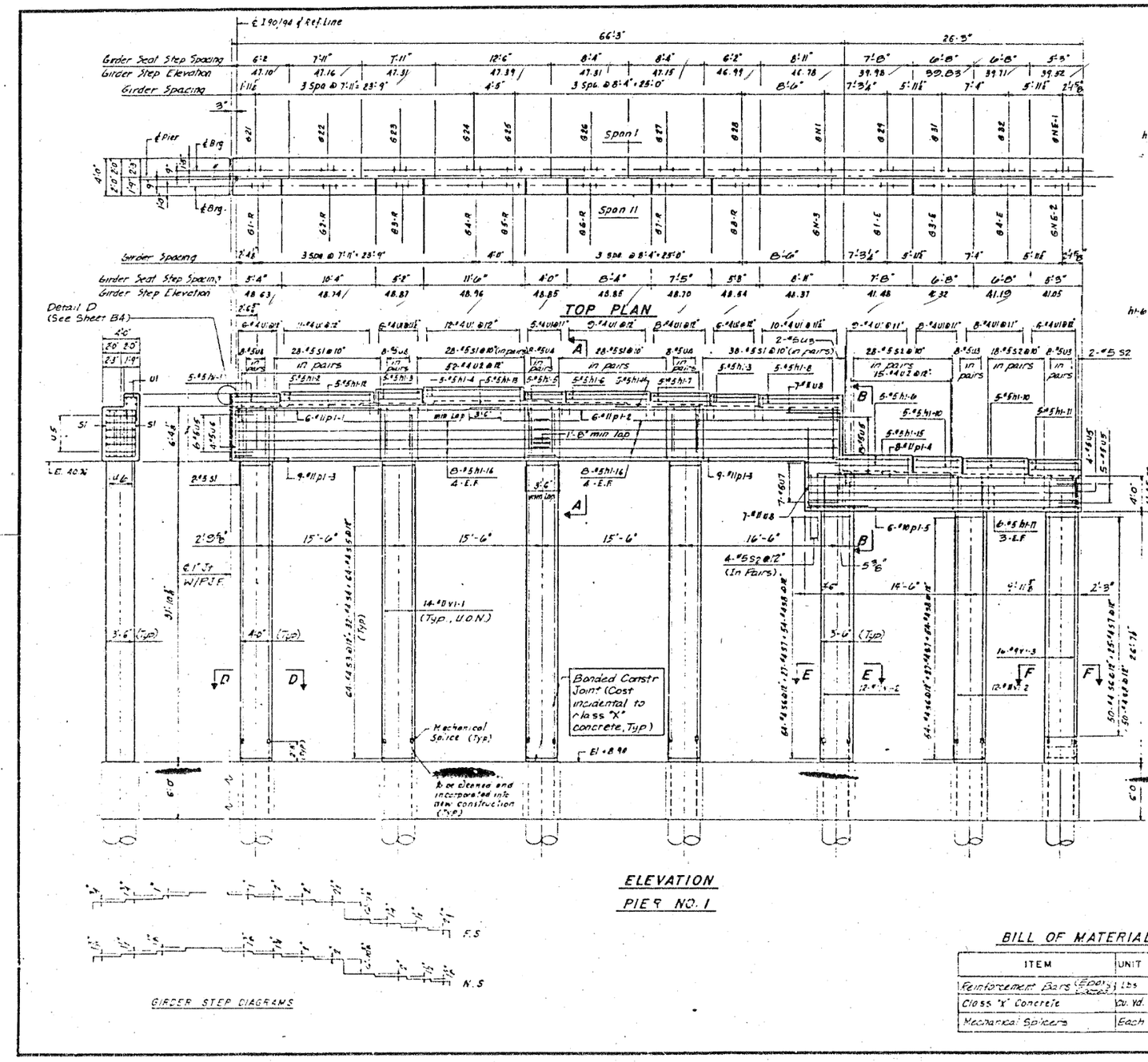

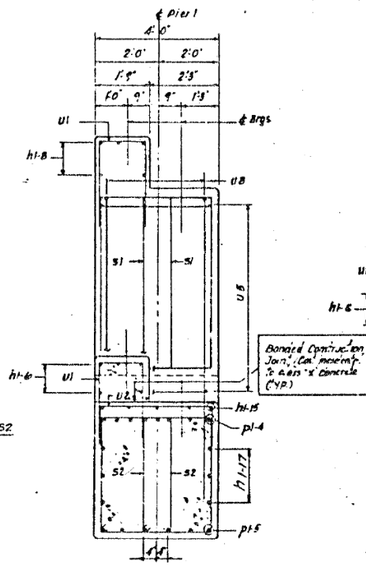

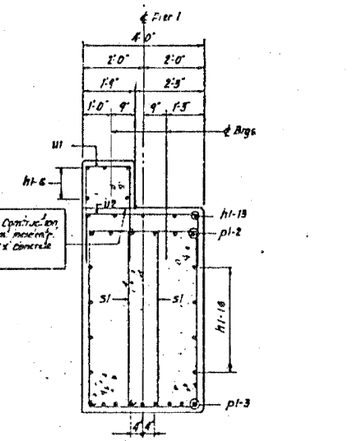

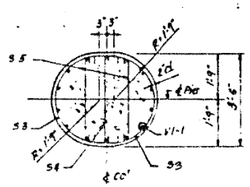

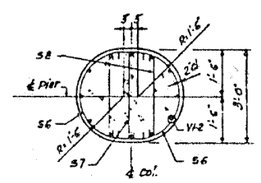

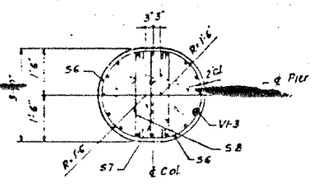

Notes:
1. All edges shall have 3/4" chamfer except as noted.
2. Pour steps monolithically with cap.
3. For reinforcement bar schedules see sheet no. B3.
4. For concrete removal see sheet no. B4.
5. All expansion bolts shall be placed in sound concrete.
6. Space reinforcement in cap to miss anchor bolts.

BILL OF MATERIAL

ITEM	UNIT	PIER NO 1
Reinforcement Bars (Epoxy)	Lbs	53,720
Class 'X' Concrete	Cu. Yd.	171.0
Mechanical Splicers	Each	96

SHEET B5 OF B33

REVISIONS

Name	Date

STATE OF ILLINOIS
DEPARTMENT OF TRANSPORTATION
F.A.I. ROUTE 90/94 (DAN RYAN EXPRESSWAY)
SECTION 1985-077-BR COOK COUNTY
N.B. MAINLINE RECONSTRUCTION
STRUCTURE 016-1110
PIER 1
Scale : NONE
Date : AUG. , 1988
Drawn By: A.V.
Checked By: M.E.M.
ENVIRODYNE ENGINEERS INC.
Chicago, Illinois

HBM ENGINEERING GROUP, LLC

USER NAME = francisco.lopez	DESIGNED - JMI	REVISED -
	CHECKED - MAI, JJS	REVISED -
PLOT SCALE = N.T.S	DRAWN - JMI	REVISED -
PLOT DATE = 1/24/2020	CHECKED - MAI, JJS	REVISED -

STATE OF ILLINOIS
DEPARTMENT OF TRANSPORTATION

EXISTING RECORD DRAWINGS
STRUCTURE NO. 016-1110
SHEET NO.AS13-05 OF AS13-82SHEETS

F.A.I. RTE.	SECTION	COUNTY	TOTAL SHEETS	SHEET NO.
90/94/290	2015-019R	COOK	2155	1500
			CONTRACT NO. 62A76	
		ILLINOIS	FED. AID PROJECT	

FILE NAME: pw:\AECOM-NA-AWS1.aecomonline.local:AECOM_DS02_NADocuments\01 Americas\Transportation\60269938 Circle\Phase_II\000_CAD\008_Structural\Sign Structures\62A76 Sign Structure\62A76-Span-S5229-Existplans.dgn
10:59:14 AM