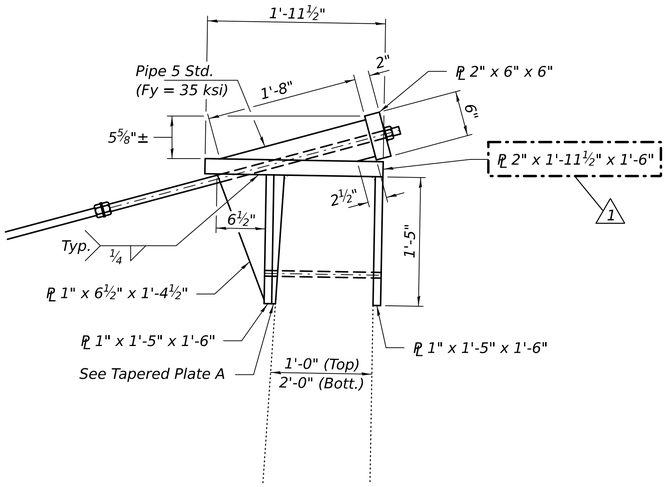

DETAIL "A"

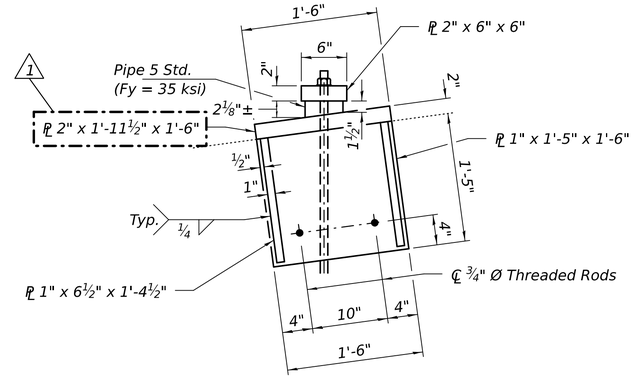

DETAIL "B"

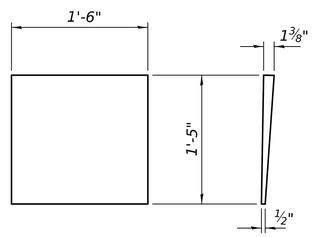

TAPERED PLATE A

MODEL: 70H72-005
FILE NAME: pw://idot-pw.bentley.com:PWIDOT/Documents/IDOT O ces/Bureau of Bridges and Structures/OBM Projects/0928600/CADData/Structures/0928600.dgn

DESIGNED - JSB	EXAMINED	ENGINEER OF STRUCTURAL SERVICES	DATE - MARCH 17, 2026	STATE OF ILLINOIS DEPARTMENT OF TRANSPORTATION	REPAIR DETAILS SN 092-8600	F.A.I. RTE.	SECTION	COUNTY	TOTAL SHEETS / SHEET NO.
CHECKED - TP	PASSED	ACTING ENGINEER OF BRIDGES AND STRUCTURES	REVISED 1 04/14/20026 JSB			74	MBPM-2026-1	VERMILION	9 / 5
DRAWN - daburdell			REVISED -					CONTRACT NO. 70H72	
CHECKED - JSB TP					SHEET 2 OF 6 SHEETS		ILLINOIS	FED. AID PROJECT	

4/14/2026 4:05:06 PM

1 REV. 4/15/26