CONTRACT NO. 64C70

F.A.P. RTE.	SECTION	COUNTY	TOTAL SHEETS	SHEET NO.
611	102T	HENRY	41	25
STA. _____		TO STA. _____		
FED. ROAD DIST. NO. _	ILLINOIS	FED. AID PROJECT		

WITNESS MARKER FOR PERMANENT SURVEY MARKERS, TYPE II

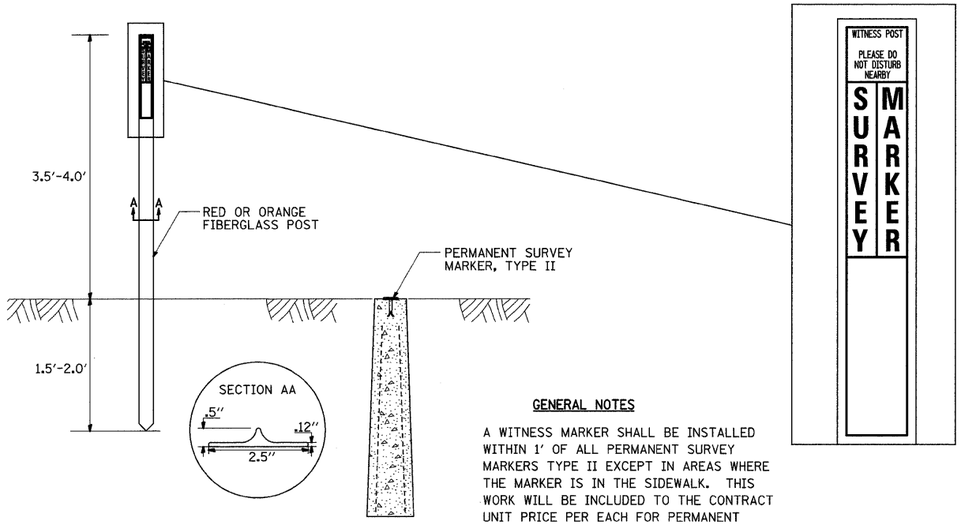

GENERAL NOTES

A WITNESS MARKER SHALL BE INSTALLED WITHIN 1' OF ALL PERMANENT SURVEY MARKERS TYPE II EXCEPT IN AREAS WHERE THE MARKER IS IN THE SIDEWALK. THIS WORK WILL BE INCLUDED TO THE CONTRACT UNIT PRICE PER EACH FOR PERMANENT SURVEY MARKERS, TYPE II.

PERMANENT SURVEY MARKERS, TYPE II

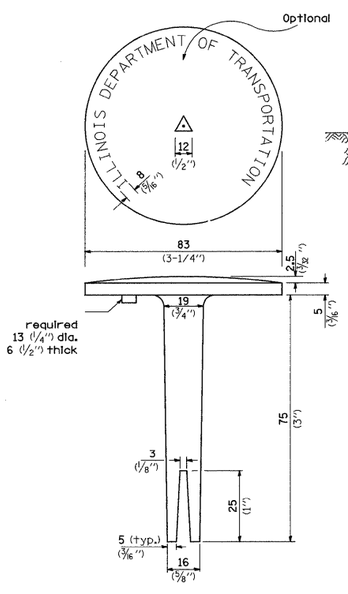

BRASS OR ALUMINUM TABLET

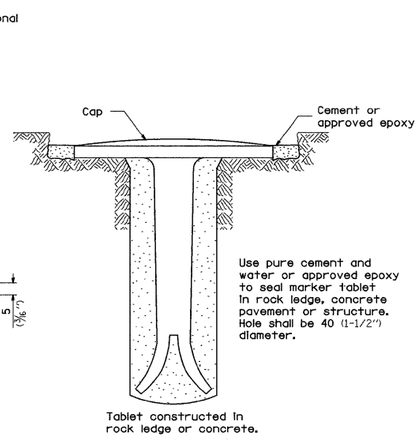

TYPE II

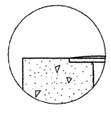

DETAIL A

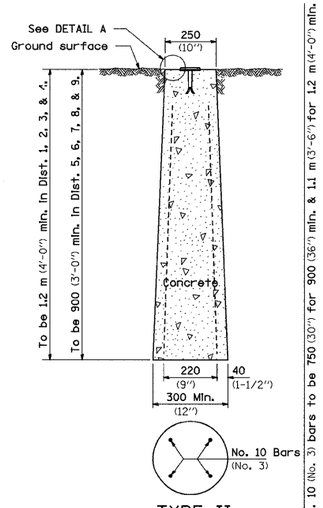

TYPE II

CAST-IN-PLACE MARKER

ALL DIMENSIONS ARE IN MILLIMETERS (INCHES) UNLESS OTHERWISE NOTED.

ROUGH GROOVED SURFACE SIGN

ILLINOIS STANDARD W8-I107

SIGN PANEL TYPE 1

COLOR: LEGEND AND BORDER - BLACK NON-RELFLECTIVE
BACKGROUND - ORANGE REFLECTORIZED

SIGN SIZE	DIMENSIONS							
	A	B	C	D	E	F	G	H
1200x1200 (48x48)	1200 (48.0)	600 (24.1)	75 (3.0)	850 (34.0)	825 (33.0)	150 (6.0)	325 (13.0)	88 (3.5)

SIGN SIZE	SERIES LINES			MARGIN	BORDER	BLANK STD.
	1	2	3			
1200x1200 (48x48)	7C	7C	7C	20 (0.8)	30 (1.2)	B4-48D

GENERAL NOTES

SIGN PANELS AND FACE MATERIALS SHALL BE ACCORDING TO SECTION 720 OF THE STANDARD SPECIFICATIONS

METAL POSTS SHALL BE IN ACCORDANCE WITH STD. 720011.

ALL MOUNTING HARDWARE SHALL BE ALUMINUM, STAINLESS STEEL, ZINC OR CADMIUM PLATED STEEL AND SHALL BE INCIDENTAL TO THE COST OF THE INSTALLATION.

ALL DIMENSIONS ARE IN MILLIMETERS (INCHES) UNLESS OTHERWISE NOTED.

PLOT DATE = Thu Jan 31 07:43:39 2008
FILE NAME = C:\PROJECTS\2211986\d1986pl.dgn
PLOT SCALE = 50.000 ' / IN.
REFERENCE = $$REF$