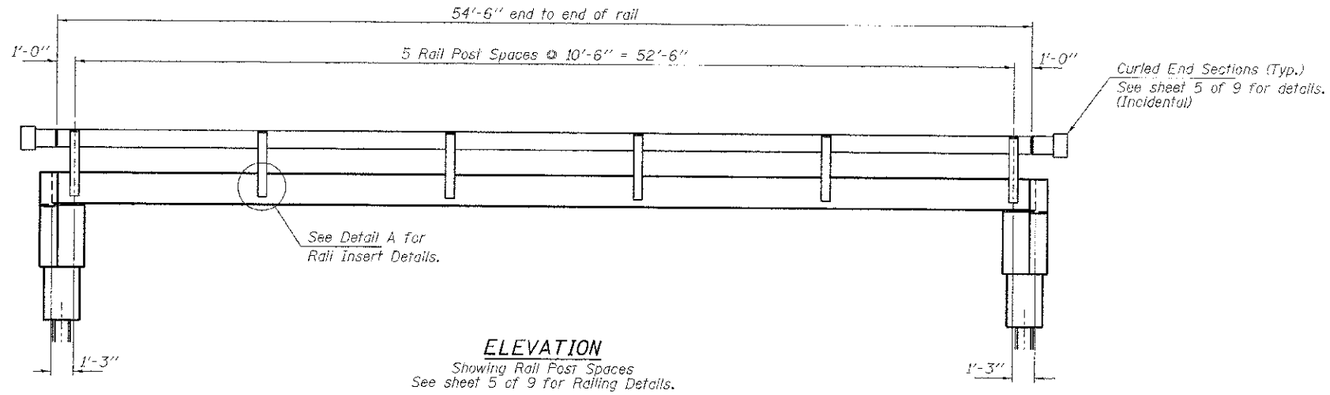

ELEVATION

Showing Rail Post Spaces
See sheet 5 of 9 for Railing Details.

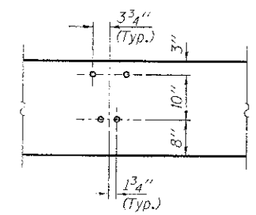

DETAIL A

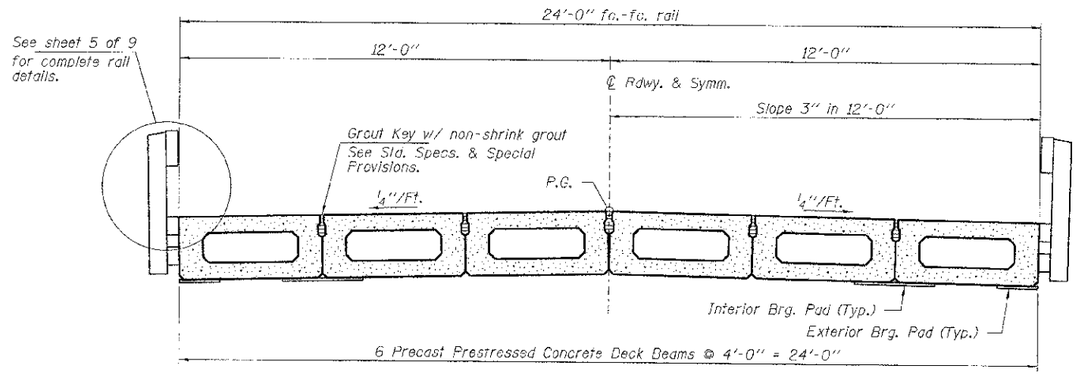

CROSS SECTION

See sheets 2 & 3 of 9 for Superstructure.

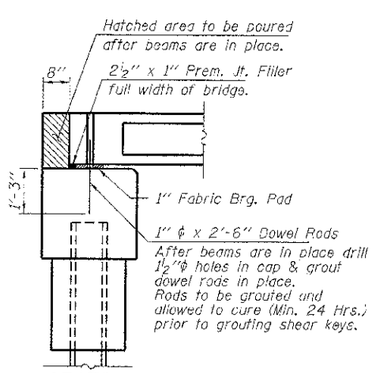

SECTION AT ABUTMENTS

@ Rt. L's

FILE NAME = 100369 sht/bridge.dgn	USER NAME =	DESIGNED - D.W.T.	REVISED -	STATE OF ILLINOIS EDWARDS COUNTY HIGHWAY DEPARTMENT	SUPERSTRUCTURE DETAILS STRUCTURE NO. 024-3142	T.R.	SECTION	COUNTY	TOTAL SHEETS / SHEET NO.
HAMPTON, LENZINI AND RENWICK, INC. 5500 STEPHANIE DRIVE, SUITE 201 SPRINGFIELD, ILLINOIS 62703 ILLINOIS PROFESSIONAL DESIGN FIRM LS/FIRM CORP. 184.000459		CHECKED - S.W.M.	REVISED -			62	10-02118-00-BR	EDWARDS	13 / 8
	P_0" SCALE =	DRAWN - D.A.B.	REVISED -			ROAD DISTRICT #2		CONTRACT NO. 95683	
	P_0: DATE = 10/2/2012	CHECKED - S.W.M.	REVISED -		SHEET NO. 4 OF 9 SHEETS			ILLINOIS FED. AID PROJECT BROS-047(037)	