ROUTE NO.	SECTION	COUNTY	TOTAL SHEETS	SHEET NO.
F.A. 317	15B-1-8	PEORIA & TAZEWELL	303	158
FED. ROAD DIST. NO. 7	ILLINOIS	FED. AID PROJECT-		

SHEET NO.
SHEETS

STATE OF ILLINOIS
DEPARTMENT OF TRANSPORTATION

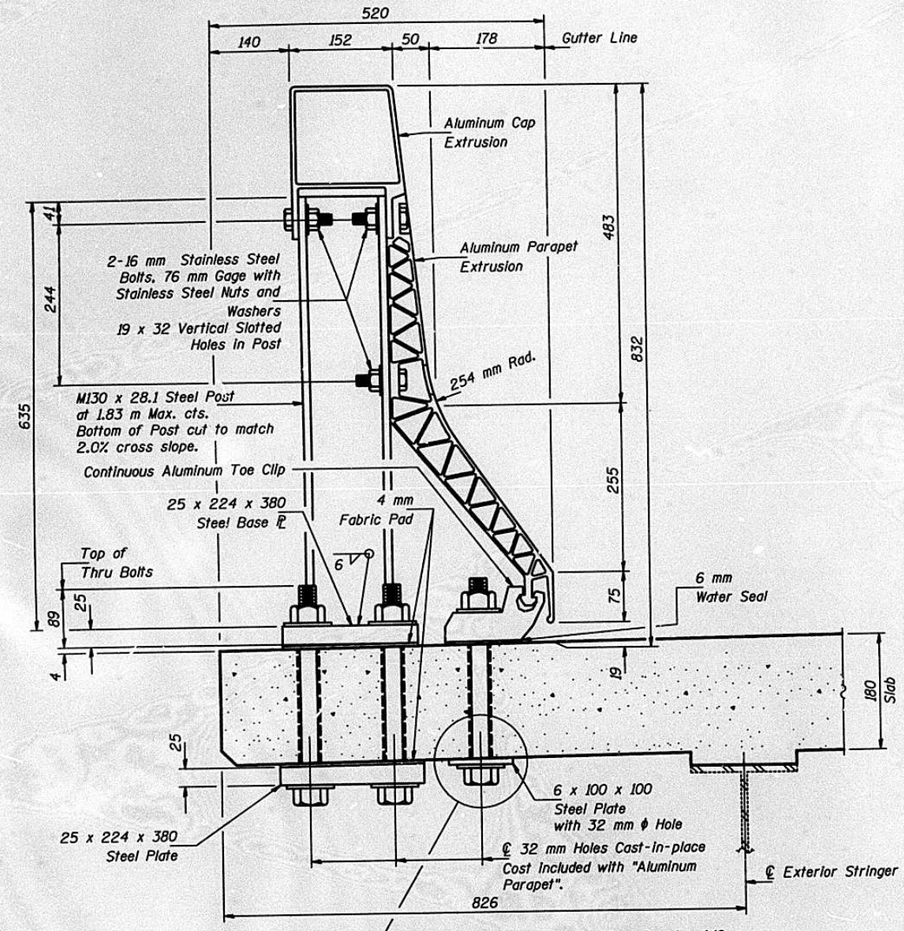

See "Alt. Section Thru Parapet" on Drawing A16. When steel interferes with Thru Bolt connection set Thru Bolt on top of steel and cast in concrete.

SECTION THRU PARAPET

(Locate Post & Thru Bolts to miss Floor Beams.)

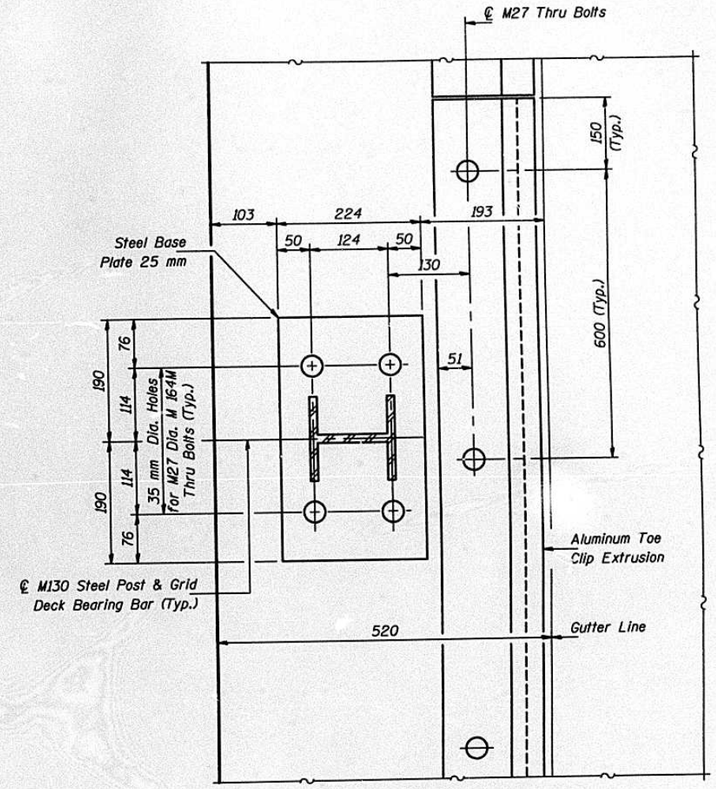

PARAPET ANCHORAGE PLAN

Notes:

The 6 mm Water Seal shall be as recommended by the Manufacturer and approved by the Engineer.

Maximum total weight of Aluminum Parapet shall not exceed 111 kg/m.

All post, steel plates, steel base plates, and fill plates shall conform to the requirements of AASHTO M-270M, Grade 345.

Parapet shall be according to Section 509 of the Standard Specifications, except as noted, and shall be paid for at the contract unit price per meter for "Aluminum Parapet".

All portions of steel (except stainless steel) in contact with aluminum shall receive two coats of asphalt paint conforming to Section 1060.07.

All stainless steel hardware for parapet shall conform to Section 1006.31.

All posts, steel plates, steel base plates, and fill plates shall be galvanized after shop fabrication according to AASHTO M 111 and ASTM A 385.

Thru Bolt material shall conform to the requirements of AASHTO M 164M.

Washer material for thru bolts shall be stainless steel.

Thru Bolts and nuts shall be hot dip galvanized according to AASHTO M 232 and ASTM A 153.

The unit price per meter for "Aluminum Parapet" shall include caps, parapet extrusions, toe clips, posts, plates, base plates, splice and sliding plates, relief joint plates, bolts, nuts, washers, fabric pads, water seal, sleeves and thru bolts along with complete installation.

Aluminum Alloy Cap, Parapet, and Toe Clip Extrusions shall conform to ASTM B 211M, Alloy 6061-T6, except for aluminum splice plates, aluminum sliding plates, aluminum plates and aluminum relief joint plates which shall conform to ASTM B 209M, Alloy 6061-T6.

DESIGNED	Steve Negangard
CHECKED	F. Allen Smith
DRAWN	John F. Schneller Jr.
CHECKED	S.P.N. F.A.S.

March 10, 1999

EXAMINED Raj J. Kaspar
ENGINEER OF BRIDGE DESIGN

PASSED Ralph E. Anderson
ENGINEER OF BRIDGES AND STRUCTURES

ALUMINUM PARAPET DETAILS
F.A. ROUTE 317 SECTION 15B-I-8
PEORIA AND TAZEWELL COUNTIES
STATION 6+791.262

DWG. NO. D6

TAMERAN

ROUTE NO.	SECTION	COUNTY	TOTAL SHEETS	SHEET NO.
F.A. 317	15B-1-8	PEORIA & TAZEWELL	303	159
FED. ROAD DIST. NO. 7	ILLINOIS	FED. AID PROJECT-		

SHEET NO.
SHEETS

STATE OF ILLINOIS
DEPARTMENT OF TRANSPORTATION

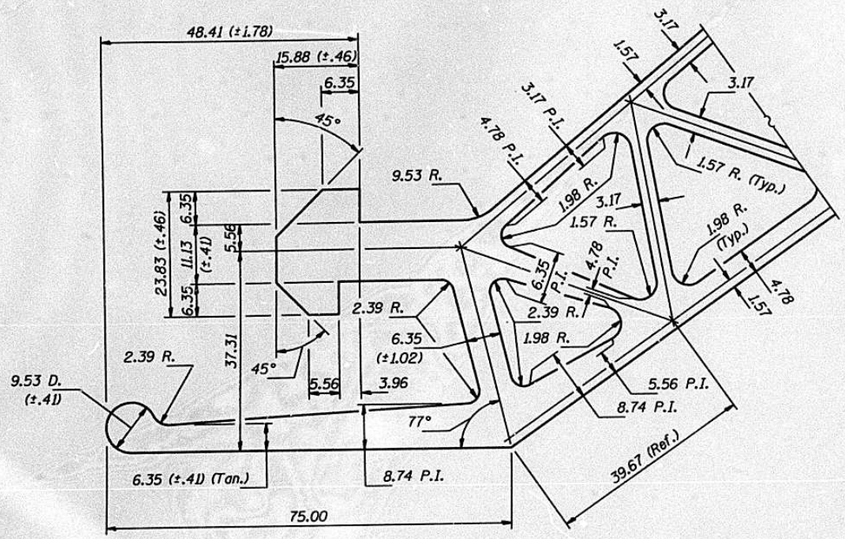

DETAIL "A"

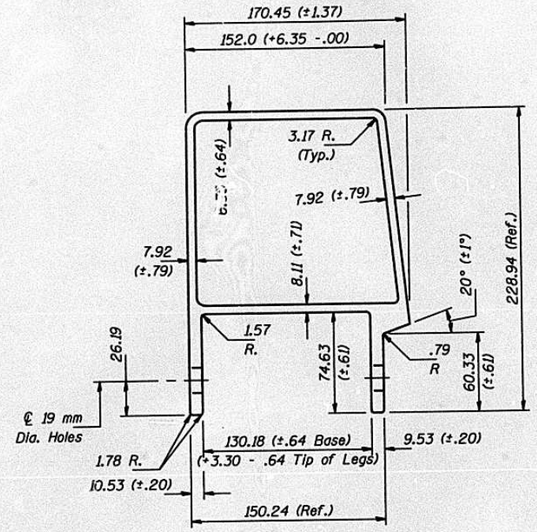

ALUMINUM CAP EXTRUSION

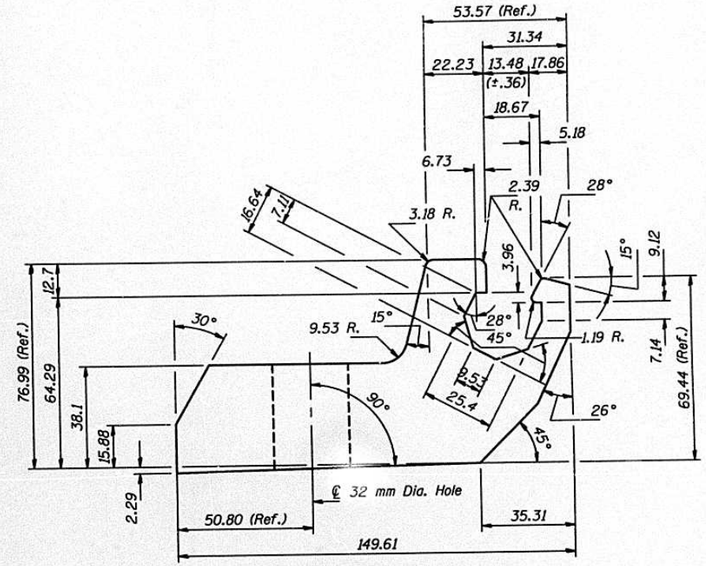

ALUMINUM TOE CLIP EXTRUSION

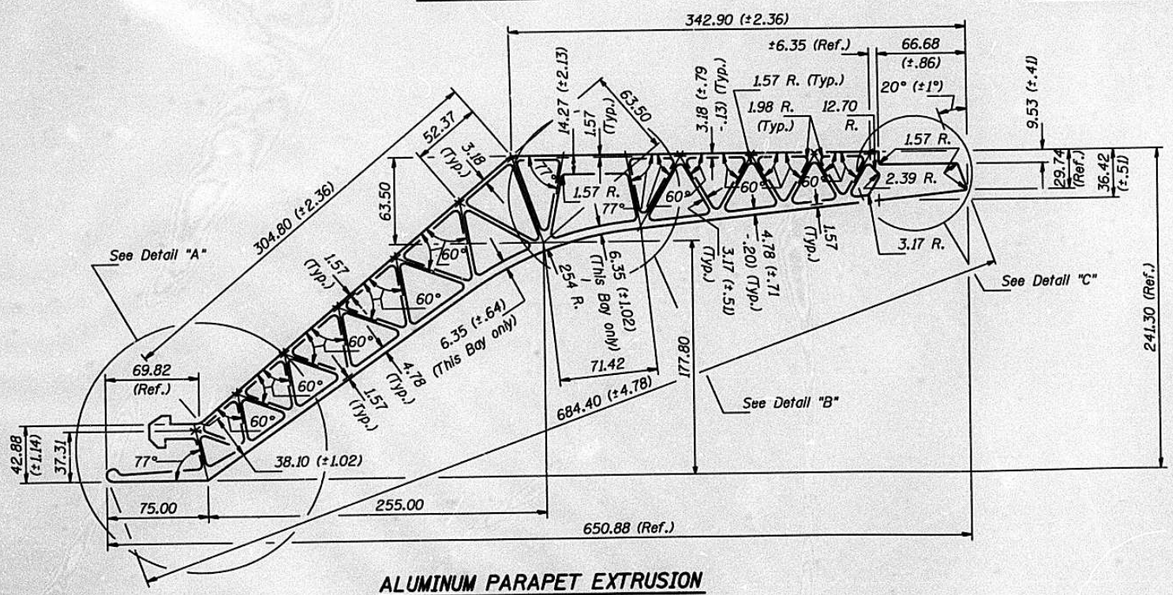

ALUMINUM PARAPET EXTRUSION

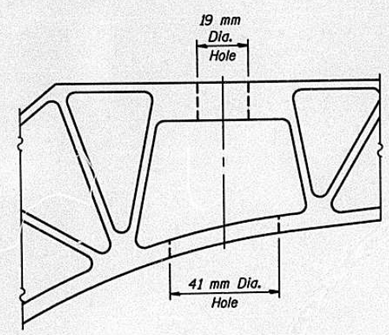

DETAIL "B"

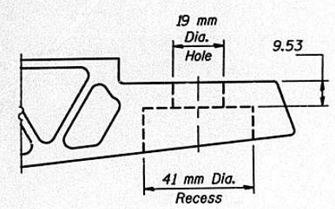

DETAIL "C"

Notes:
Radii shown are in millimeters.

DESIGNED	Steve Negangard
CHECKED	F. Allen Smith
DRAWN	John F. Schneller Jr.
CHECKED	S.P.N. F.A.S.

March 10, 1999
EXAMINED Greg J. Kasper ENGINEER OF BRIDGE DESIGN
PASSED Ralph E. Anderson ENGINEER OF BRIDGES AND STRUCTURES

ALUMINUM PARAPET DETAILS
F.A. ROUTE 317 SECTION 15B-1-8
PEORIA AND TAZEWELL COUNTIES
STATION 6+791.262

DWG. NO. D7

D C B A 0 A B C
TAMERAN

STATE OF ILLINOIS
DEPARTMENT OF TRANSPORTATION

ROUTE NO.	SECTION	COUNTY	TOTAL SHEETS	SHEET NO.
F.A. 317	158-1-8	PEORIA & TAZEWELL	303	160
FED. ROAD DIST. NO. 7		ILLINOIS	FED. AID PROJECT-	

SHEET NO.
SHEETS

Note:
Cost of field welding included with "Aluminum Parapet".

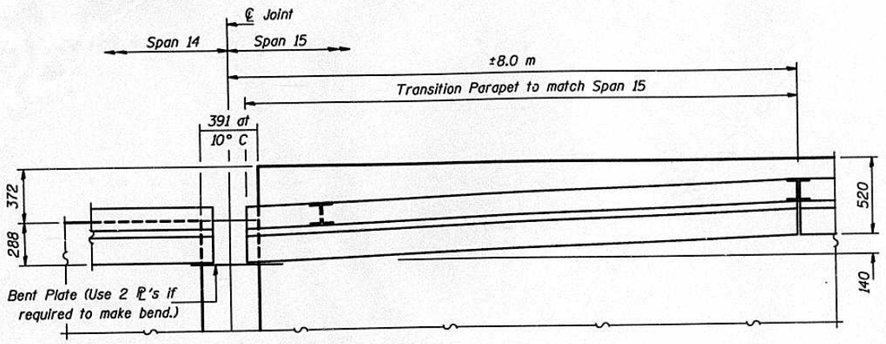

PARAPET TRANSITION DETAIL
TYPICAL NO. & SO. PARAPET

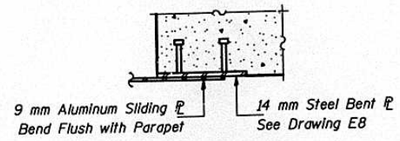

SECTION B-B

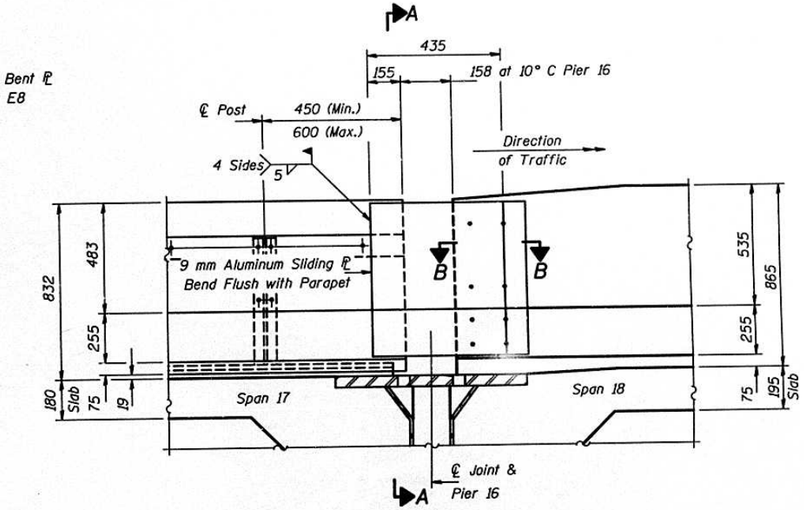

ELEVATION - PARAPET SLIDING PLATE
AT PIER 16

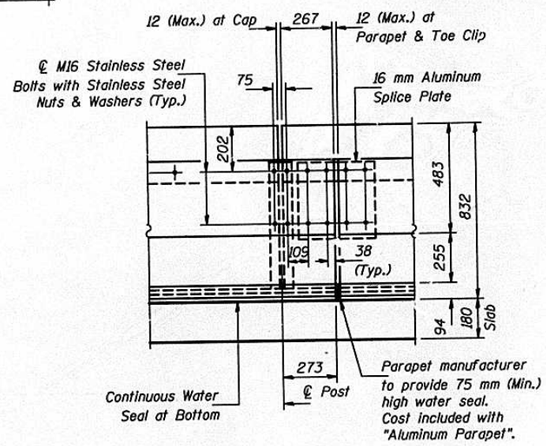

ELEVATION - PARAPET
SPLICE DETAIL

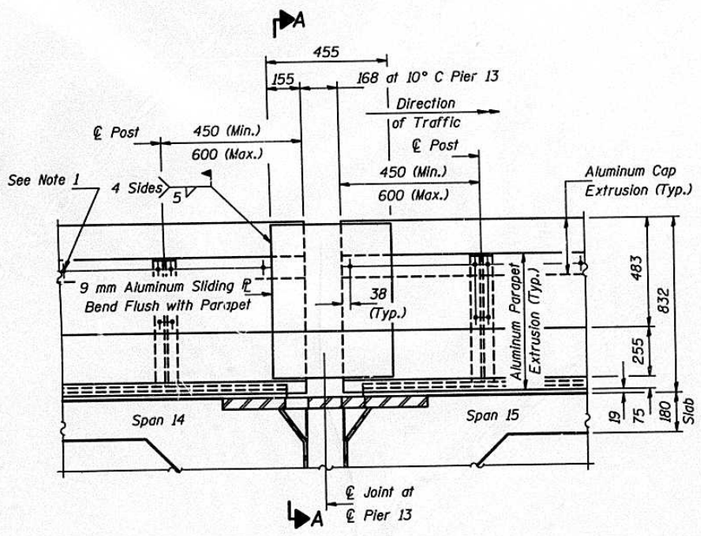

ELEVATION - PARAPET SLIDING PLATE
AT PIER 13

Note 1:
M16 Stainless Steel Bolt with Stainless Steel Nut and Washer at 450 mm cts. (Typ.) between Verticals, Diagonals and Posts.

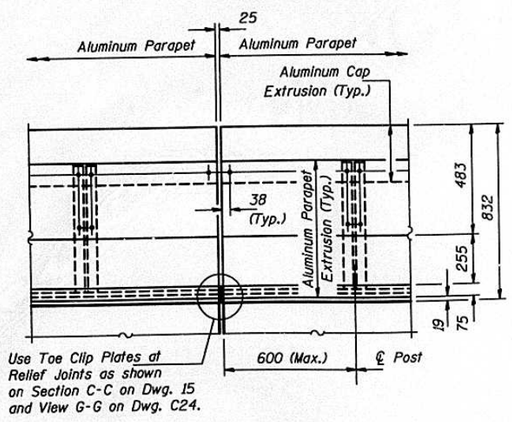

ELEVATION - ALUMINUM PARAPET
AT RELIEF JOINT

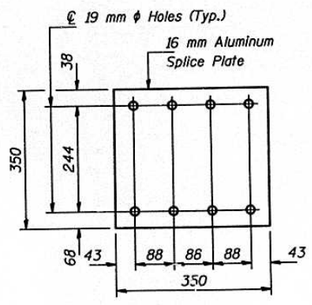

ALUMINUM SPLICE PLATE

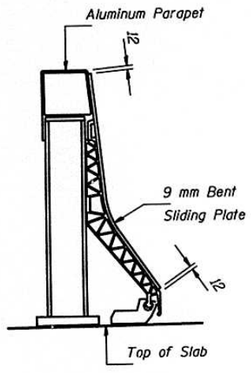

SECTION A-A

ALUMINUM PARAPET DETAILS
SPANS 15 THRU 17
F.A. ROUTE 317 SECTION 15B-I-8
PEORIA AND TAZEWELL COUNTIES
STATION 6+791.262

DWG. NO. D8

DESIGNED	Steve Negangard
CHECKED	F. Allen Smith
DRAWN	John F. Schneller Jr.
CHECKED	S.P.N. F.A.S.

March 10, 1999
EXAMINED Greg J. Kaspar ENGINEER OF BRIDGE DESIGN
PASSED Ralph E. Anderson ENGINEER OF BRIDGES AND STRUCTURES

ROUTE NO.	SECTION	COUNTY	TOTAL SHEETS	SHEET NO.
F.A. 317	15B-I-8	PEORIA & TAZEWELL	303	161
FED. ROAD DIST. NO. 7	ILLINOIS	FED. AID PROJECT-		

SHEET NO.
SHEETS

STATE OF ILLINOIS
DEPARTMENT OF TRANSPORTATION

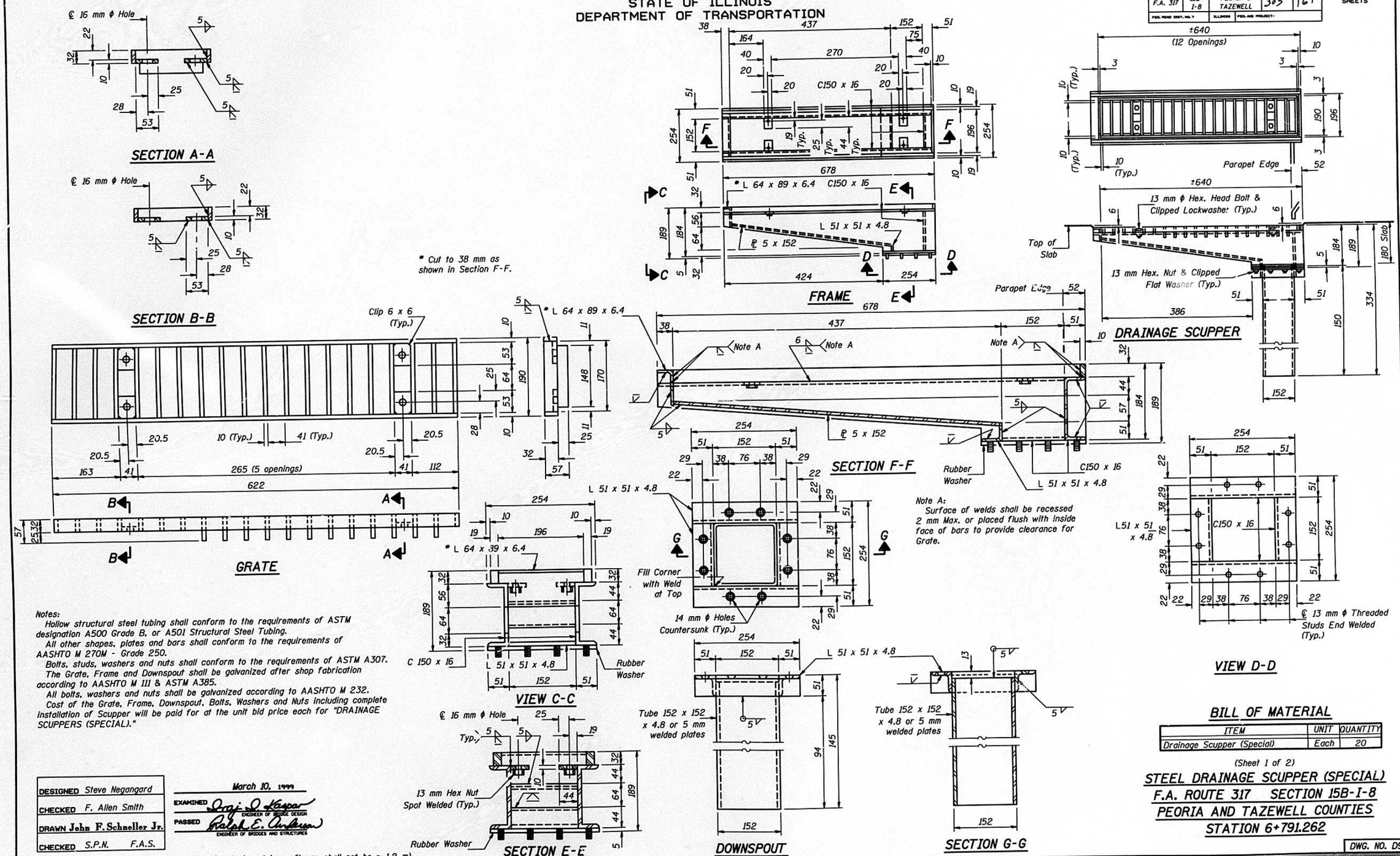

Notes:

Hollow structural steel tubing shall conform to the requirements of ASTM designation A500 Grade B, or A501 Structural Steel Tubing.

All other shapes, plates and bars shall conform to the requirements of AASHTO M 270M - Grade 250.

Bolts, studs, washers and nuts shall conform to the requirements of ASTM A307.

The Grate, Frame and Downspout shall be galvanized after shop fabrication according to AASHTO M 111 & ASTM A385.

All bolts, washers and nuts shall be galvanized according to AASHTO M 232.

Cost of the Grate, Frame, Downspout, Bolts, Washers and Nuts including complete installation of Scupper will be paid for at the unit bid price each for "DRAINAGE SCUPPERS (SPECIAL)."

BILL OF MATERIAL

ITEM	UNIT	QUANTITY
Drainage Scupper (Special)	Each	20

DESIGNED	Steve Negangard
CHECKED	F. Allen Smith
DRAWN	John F. Schneller Jr.
CHECKED	S.P.N. F.A.S.

March 10, 1999

EXAMINED — ENGINEER OF BRIDGE DESIGN

PASSED — ENGINEER OF BRIDGES AND STRUCTURES

(Sheet 1 of 2)

STEEL DRAINAGE SCUPPER (SPECIAL)
F.A. ROUTE 317 SECTION 15B-I-8
PEORIA AND TAZEWELL COUNTIES
STATION 6+791.262

DWG. NO. D9

STATE OF ILLINOIS
DEPARTMENT OF TRANSPORTATION

ROUTE NO.	SECTION	COUNTY	TOTAL SHEETS	SHEET NO.
F.A. 317	15B-1-8	PEORIA & TAZEWELL	303	162
FED. ROAD DIST. NO. 7		ILLINOIS	FED. AID PROJECT-	

SHEET NO.
SHEETS

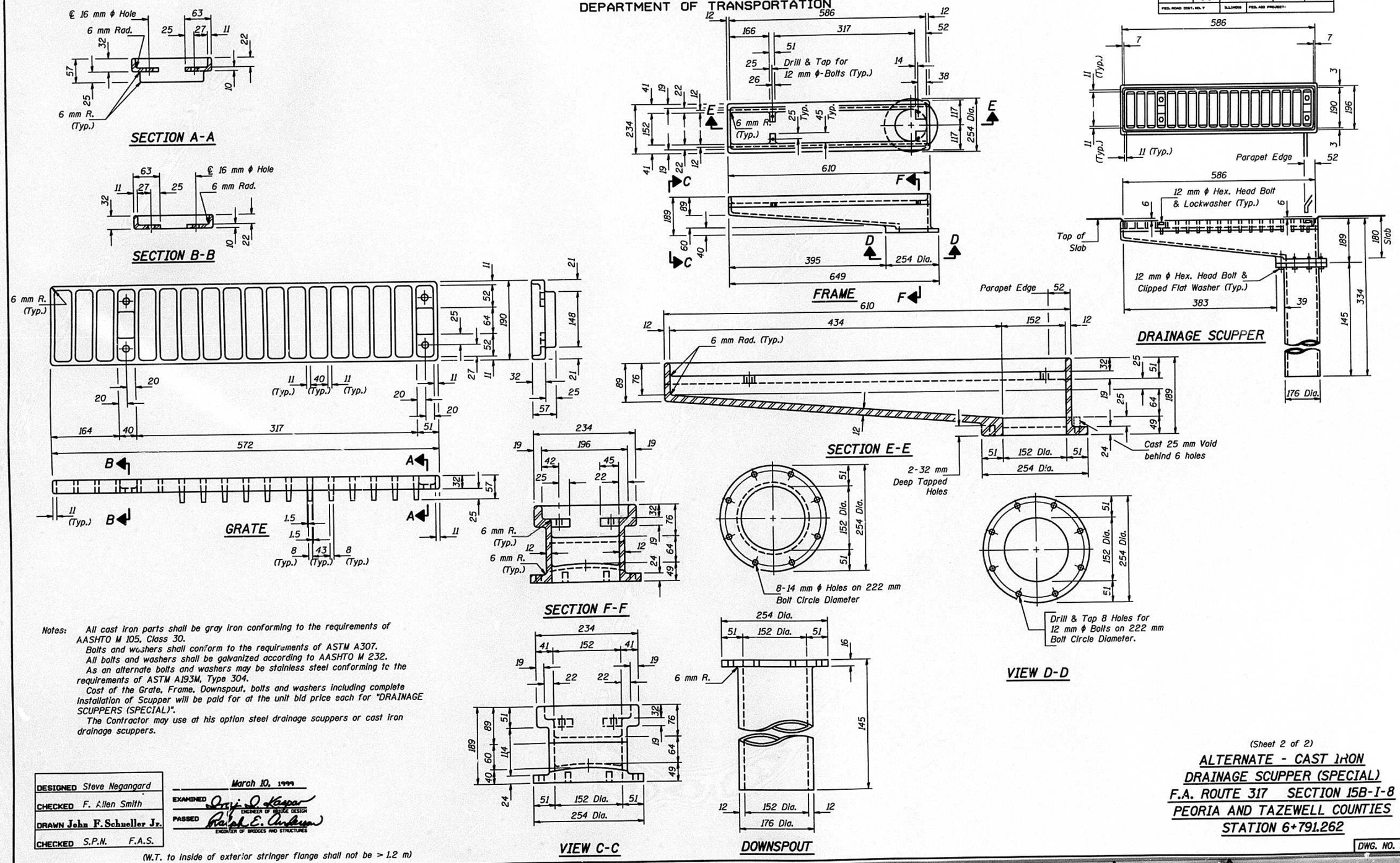

Notes: All cast iron parts shall be gray iron conforming to the requirements of AASHTO M 105, Class 30.
Bolts and washers shall conform to the requirements of ASTM A307.
All bolts and washers shall be galvanized according to AASHTO M 232.
As an alternate bolts and washers may be stainless steel conforming to the requirements of ASTM A193M, Type 304.
Cost of the Grate, Frame, Downspout, bolts and washers including complete installation of Scupper will be paid for at the unit bid price each for "DRAINAGE SCUPPERS (SPECIAL)".
The Contractor may use at his option steel drainage scuppers or cast iron drainage scuppers.

DESIGNED	Steve Negangard
CHECKED	F. Allen Smith
DRAWN	John F. Schueller Jr.
CHECKED	S.P.N. F.A.S.

March 10, 1999
EXAMINED Orij. J. Kaspar — ENGINEER OF BRIDGE DESIGN
PASSED Ralph E. Anderson — ENGINEER OF BRIDGES AND STRUCTURES

(W.T. to inside of exterior stringer flange shall not be > 1.2 m)

(Sheet 2 of 2)

ALTERNATE - CAST IRON
DRAINAGE SCUPPER (SPECIAL)
F.A. ROUTE 317 SECTION 15B-1-8
PEORIA AND TAZEWELL COUNTIES
STATION 6+791.262

DWG. NO. D10

TAMERAN

STATE OF ILLINOIS
DEPARTMENT OF TRANSPORTATION

ROUTE NO.	SECTION	COUNTY	TOTAL SHEETS	SHEET NO.
F.A. 317	15B-1-8	PEORIA & TAZEWELL	303	163
FED. ROAD DIST. NO. 7	ILLINOIS	FED. AID PROJECT-		

SHEET NO.
SHEETS

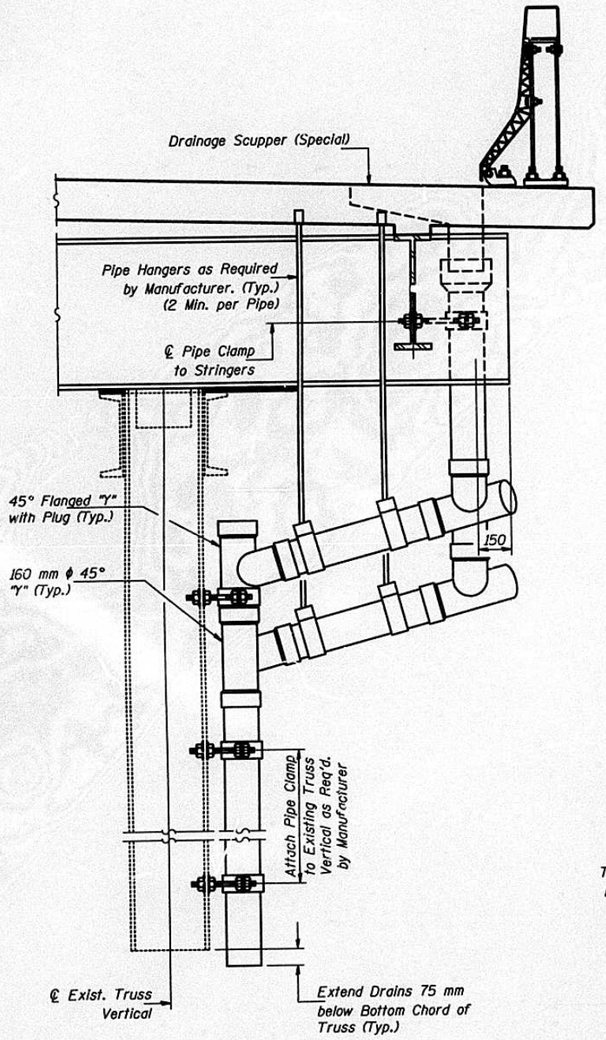

ELEVATION

(Maximum 3 Drains to Down Spout at each Truss Vertical)

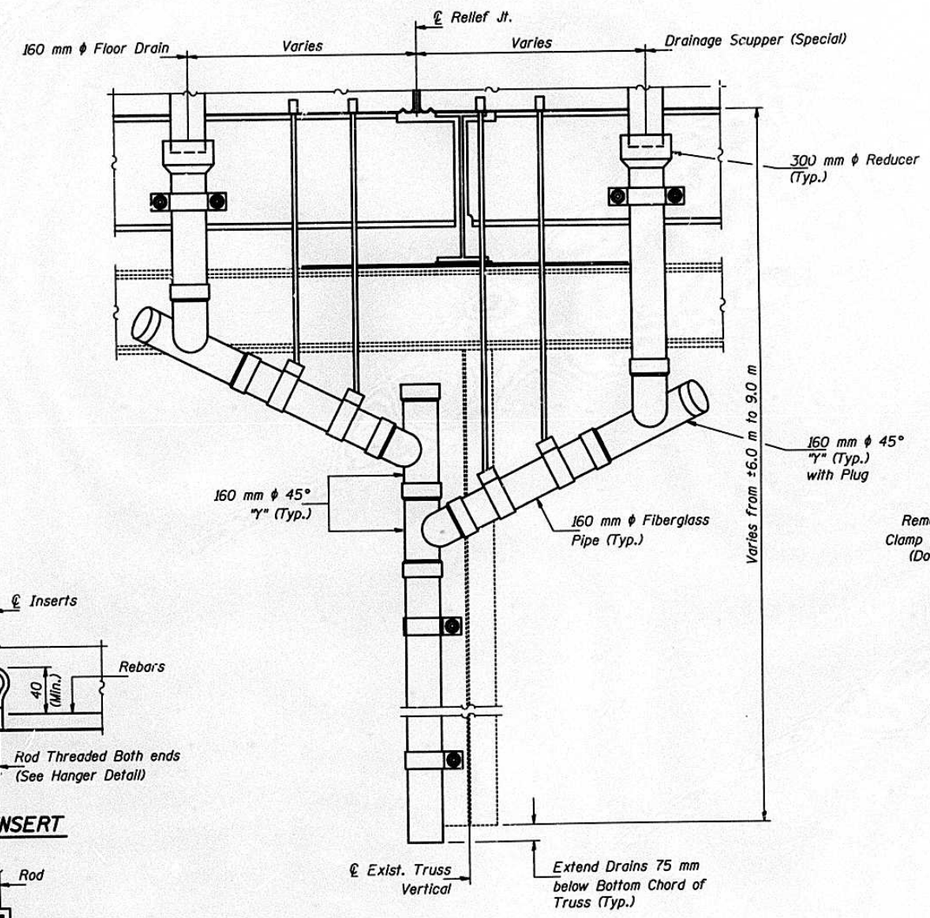

END VIEW

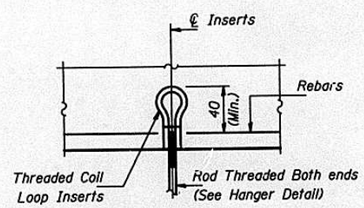

SLAB INSERT

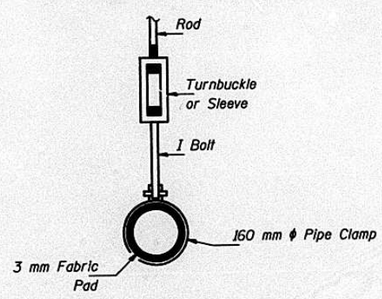

HANGER DETAIL

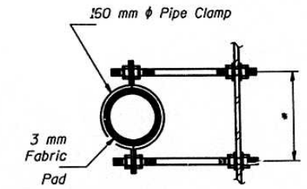

PIPE CLAMP DETAIL AT STRINGERS

* Dimension as required by Pipe Clamp.

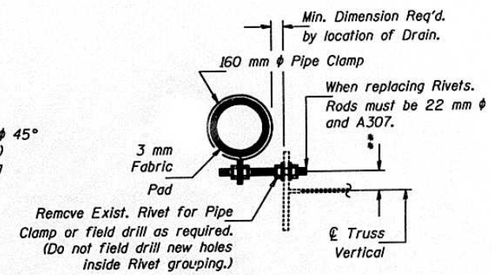

PIPE CLAMP DETAIL AT TRUSS VERTICALS

** Dimension as required by location of Drain.

Notes:

The exterior surfaces of the pipe shall be painted with finish coat as specified in the special provisions for Cleaning and Painting New Metal Structures. The exterior surfaces of the drain shall be cleaned according to Steel Structures Painting Council's Spec. SSPC-SP1 prior to painting.

Fiberglass pipe shall conform to ASTM: D2996, with short-time rupture strength hoop tensile stress of 200 MPa minimum. The surface of the fiberglass pipe shall be free of bond inhibiting agents.

The Clamping Device and all supporting hardware used for drainage system shall be galvanized according to AASHTO M-232.

Cost of C220 x 17 is included in "Furnishing and Erecting Structural Steel".

BILL OF MATERIAL

ITEM	UNIT	QUANTITY
Drainage System	L. Sum	0.2

DESIGNED	Steve Negangard
CHECKED	F. Allen Smith
DRAWN	John F. Schneller Jr.
CHECKED	S.P.N. F.A.S.

March 10, 1999

EXAMINED Greg D. Kasper — ENGINEER OF BRIDGE DESIGN

PASSED Rafael E. Anderson — ENGINEER OF BRIDGES AND STRUCTURES

DRAINAGE SYSTEM
F.A. ROUTE 317 SECTION 15B-1-8
PEORIA AND TAZEWELL COUNTIES
STATION 6+791.262

DWG. NO. D11

TAMERAN

ROUTE NO.	SECTION	COUNTY	TOTAL SHEETS	SHEET NO.
F.A. 317	15B-1-8	PEORIA & TAZEWELL	303	164
FED. ROAD DIST. NO. 7	ILLINOIS	FED. AID PROJECT-		

SHEET NO.
SHEETS

STATE OF ILLINOIS
DEPARTMENT OF TRANSPORTATION

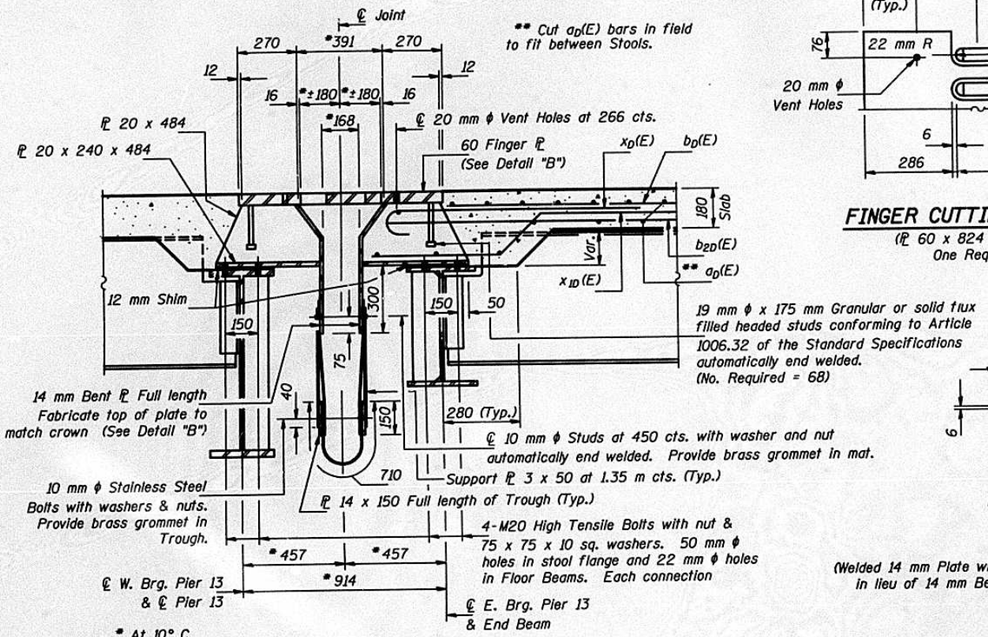

SECTION 1-1
(Looking North)

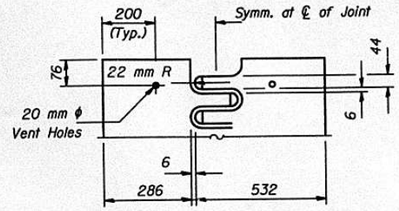

FINGER CUTTING DIAGRAM
(PL 60 x 824 x 8.852 m One Required)

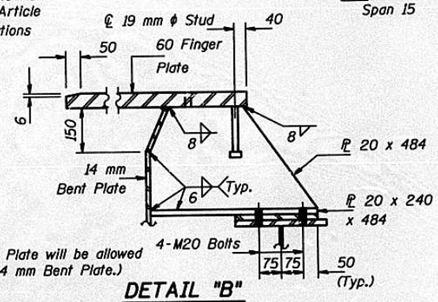

(Welded 14 mm Plate will be allowed in lieu of 14 mm Bent Plate.)

DETAIL "B"

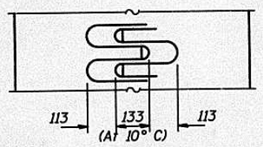

FINGER PLATE SETTING DIAGRAM

Add 1 mm per each 10 m of expansion for every 8° C above the normal temp. of 10° C. Subtract 1 mm per each 10 m of expansion for every 8° C below the normal of 10° C. (Expansion Length = 191.4 m)

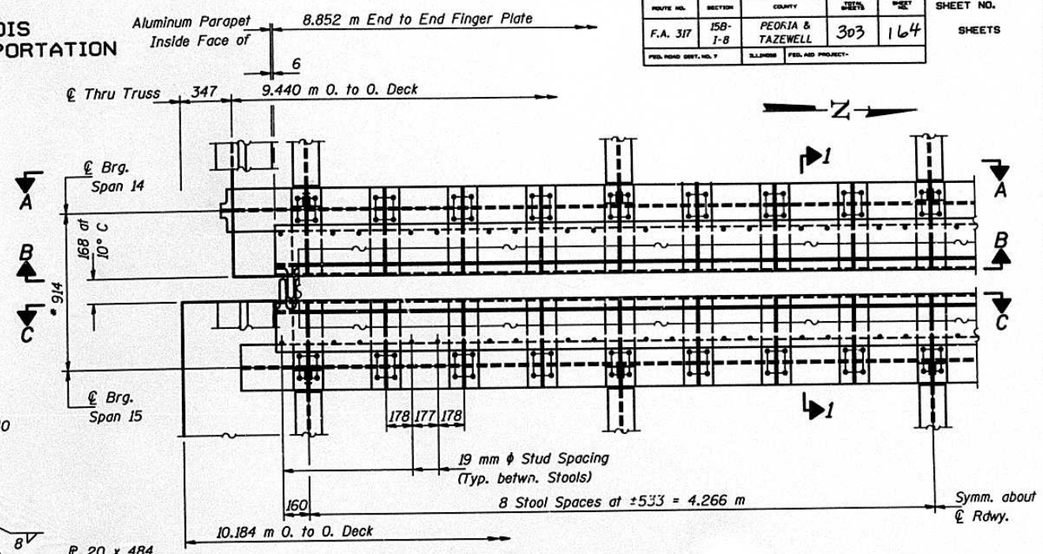

HALF PLAN

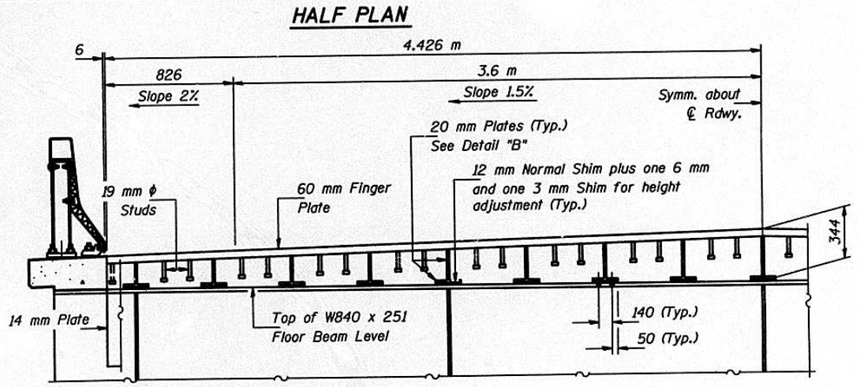

SECTION B-B

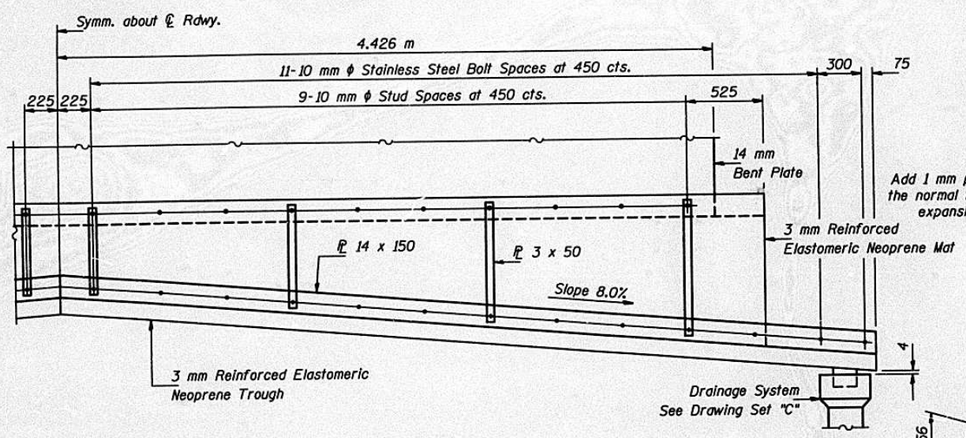

SECTION A-A

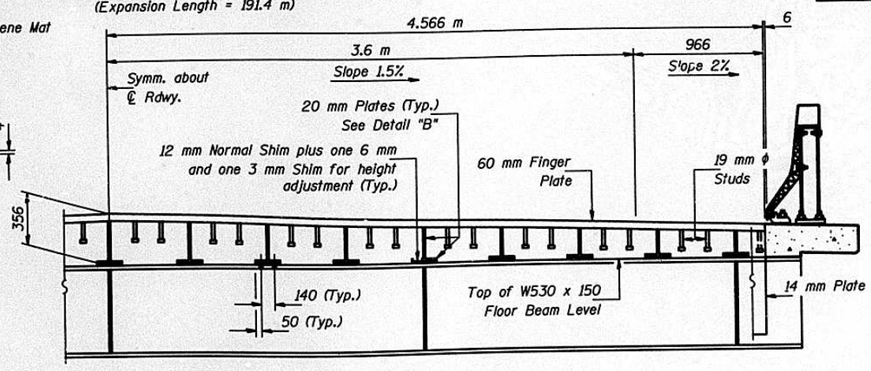

SECTION C-C

Notes: Finger Plate shall be M 270M Grade 345.

DESIGNED	Steve Negangard
CHECKED	F. Allen Smith
DRAWN	John F. Schneller Jr.
CHECKED	S.P.N. F.A.S.

March 10, 1999
EXAMINED Greg J. Kaspar — ENGINEER OF BRIDGE DESIGN
PASSED Ralph E. Anderson — ENGINEER OF BRIDGES AND STRUCTURES

EXPANSION JOINT DETAILS
PIER 13
F.A. ROUTE 317 SECTION 15B-1-8
PEORIA AND TAZEWELL COUNTIES
STATION 6+791.262

DWG. NO. D12

STATE OF ILLINOIS
DEPARTMENT OF TRANSPORTATION

ROUTE NO.	SECTION	COUNTY	TOTAL SHEETS	SHEET NO.
F.A. 317	15B-1-8	PEORIA & TAZEWELL	303	169
FED. ROAD DIST. NO. 7		ILLINOIS	FED. AID PROJECT-	

SHEET NO.
SHEETS

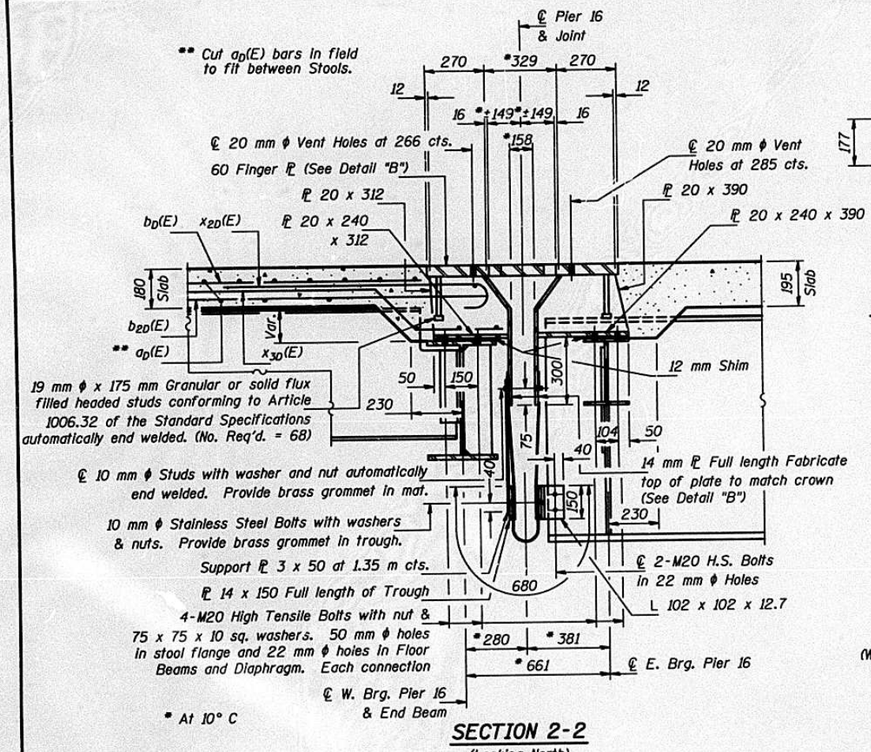

SECTION 2-2
(Looking North)

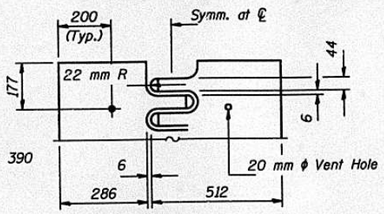

FINGER CUTTING DIAGRAM
(ℙ 60 x 804 x 9.132 m One Required)

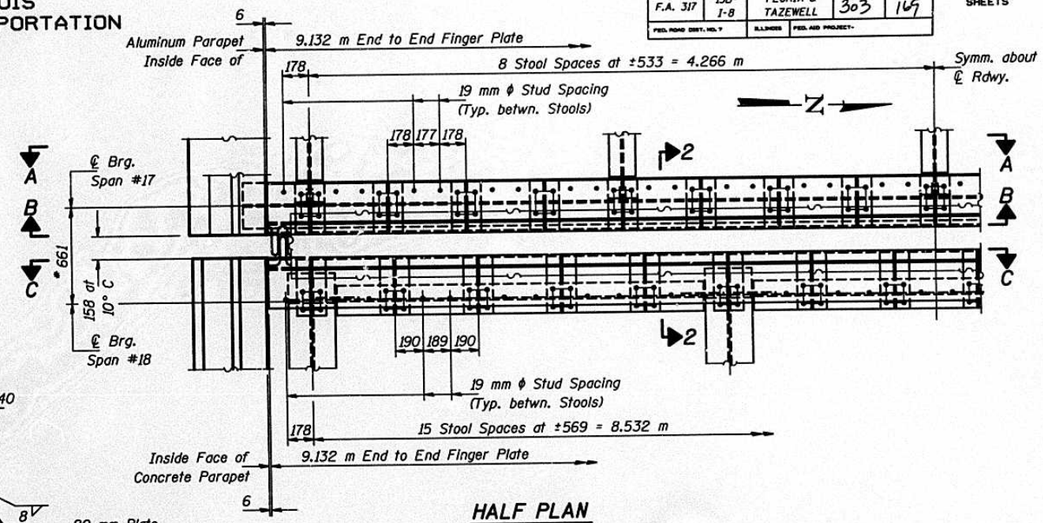

HALF PLAN

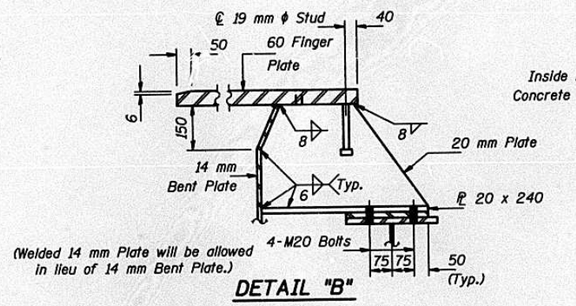

DETAIL "B"

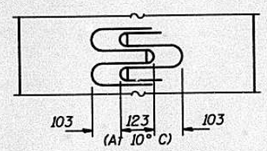

FINGER PLATE SETTING DIAGRAM

Add 1 mm per each 10 m of expansion for every 8° C above the normal temp. of 10° C. Subtract 1 mm per each 10 m of expansion for every 8° C below the normal of 10° C. (Expansion Length = 171.4 m)

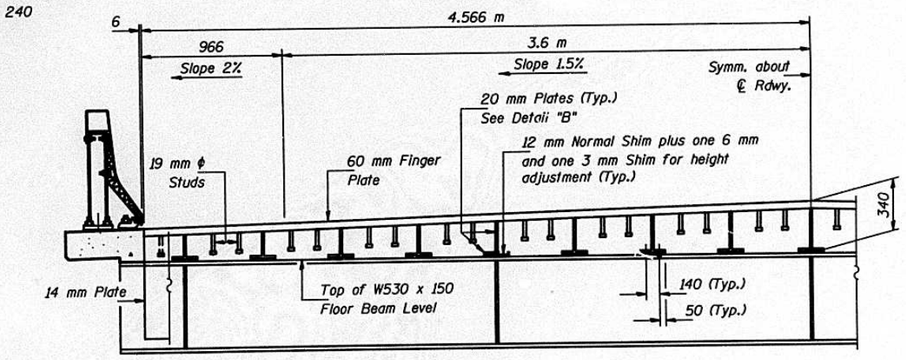

SECTION B-B

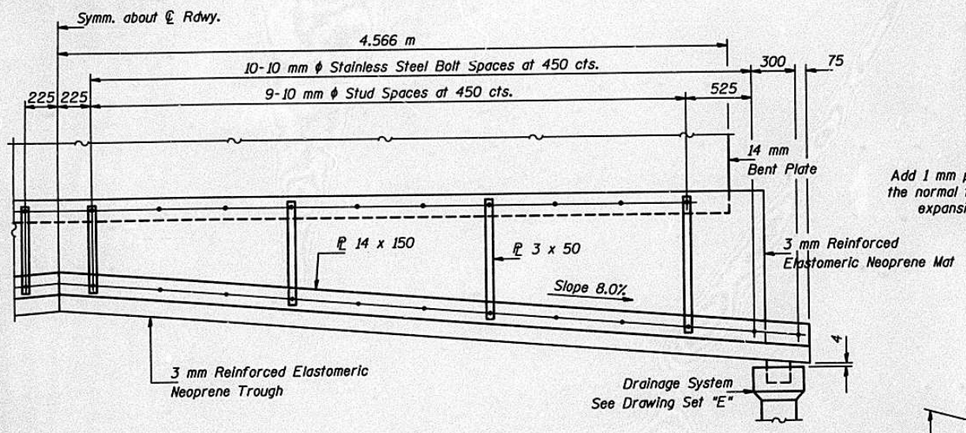

SECTION A-A

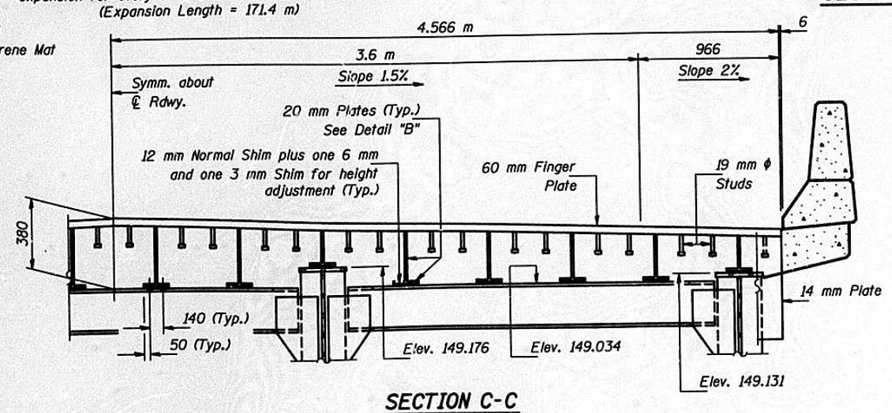

SECTION C-C

Notes: Finger Plate Steel be M 270M Grade 345.

DESIGNED	Steve Negangard
CHECKED	F. Allen Smith
DRAWN	John F. Schneller Jr.
CHECKED	S.P.N. F.A.S.

March 10, 1999
EXAMINED Greg J. Kaspar — ENGINEER OF BRIDGE DESIGN
PASSED Ralph E. Anderson — ENGINEER OF BRIDGES AND STRUCTURES

EXPANSION JOINT DETAILS
PIER 16
F.A. ROUTE 317 SECTION 15B-I-8
PEORIA AND TAZEWELL COUNTIES
STATION 6+791.262

DWG. NO. D13

D C B A 0 A B C
TAMERAN

ROUTE NO.	SECTION	COUNTY	TOTAL SHEETS	SHEET NO.
F.A. 317	15B-1-8	PEORIA & TAZEWELL	303	166
FED. ROAD DIST. NO. 7	ILLINOIS	FED. AID PROJECT-		

SHEET NO.
SHEETS

STATE OF ILLINOIS
DEPARTMENT OF TRANSPORTATION

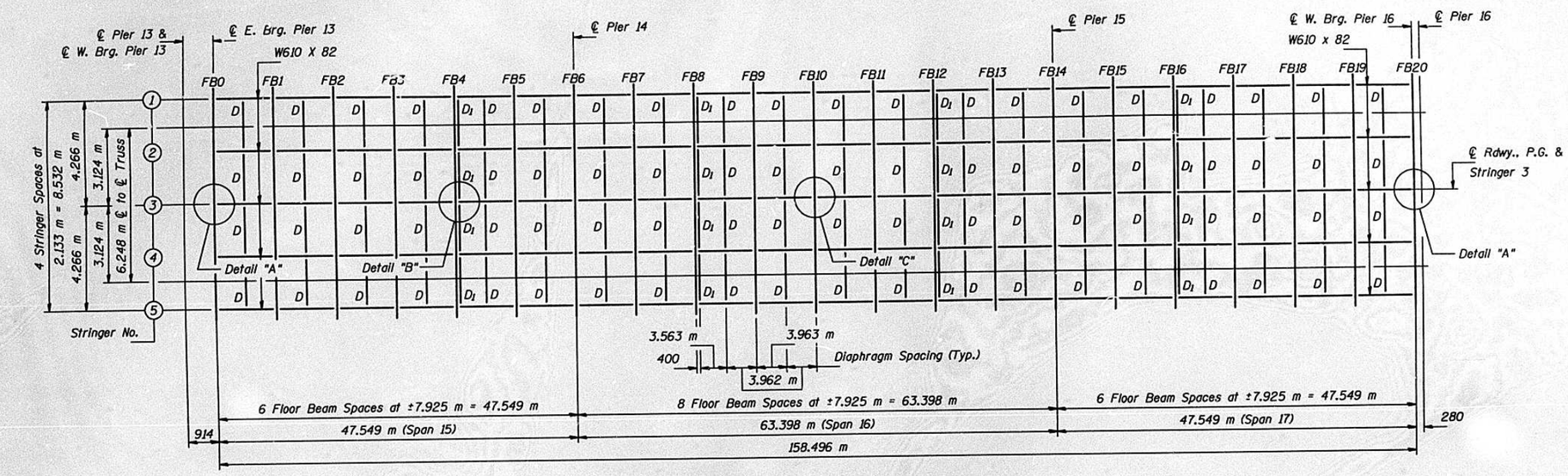

FRAMING PLAN-SPANS 15, 16 & 17

(All Stringers are W530 x 66, except as noted.)
(All Floor Beams are W610 x 153, except FB0 & FB20 are W530 x 150.)

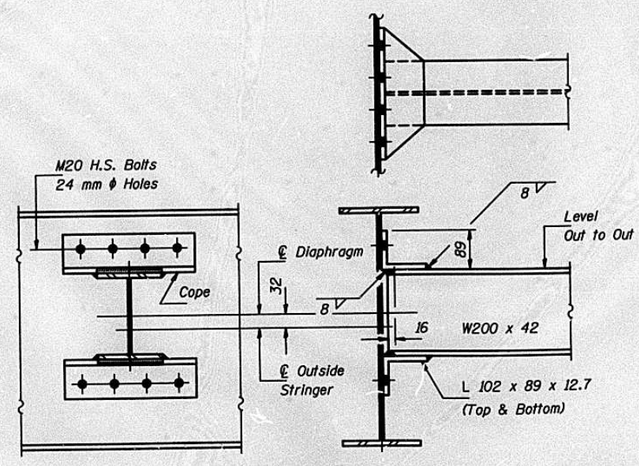

DIAPHRAGM D

(80 Required)

Note: Two hardened washers shall be required over all oversize holes.

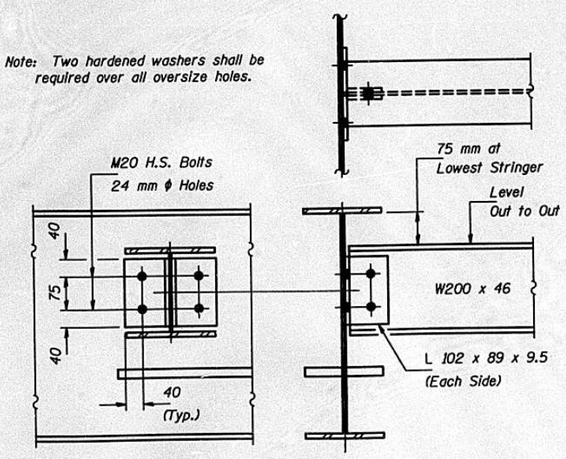

DIAPHRAGM D_1

(16 Required)

Notes: See Drawings D15 for Detail "A" & Detail "C".
See Drawing D16 for Detail "B".
All Stringers and Floor Beams shall conform to the Requirements of Notch Toughness.

DESIGNED	Steve Negangard
CHECKED	F. Allen Smith
DRAWN	John F. Schneller Jr.
CHECKED	S.P.N. F.A.S.

March 10, 1999
EXAMINED Craig J. Kasper — ENGINEER OF BRIDGE DESIGN
PASSED Ralph E. Anderson — ENGINEER OF BRIDGES AND STRUCTURES

STRUCTURAL STEEL
SPANS 15 THRU 17
F.A. ROUTE 317 SECTION 15B-1-8
PEORIA AND TAZEWELL COUNTIES
STATION 6+791.262

DWG. NO. D14

D C B A 0 A B C
TAMERAN

STATE OF ILLINOIS
DEPARTMENT OF TRANSPORTATION

ROUTE NO.	SECTION	COUNTY	TOTAL SHEETS	SHEET NO.
F.A. 317	158-1-8	PEORIA & TAZEWELL	303	164
FED. ROAD DIST. NO. 7		ILLINOIS	FED. AID PROJECT-	

SHEET NO.
SHEETS

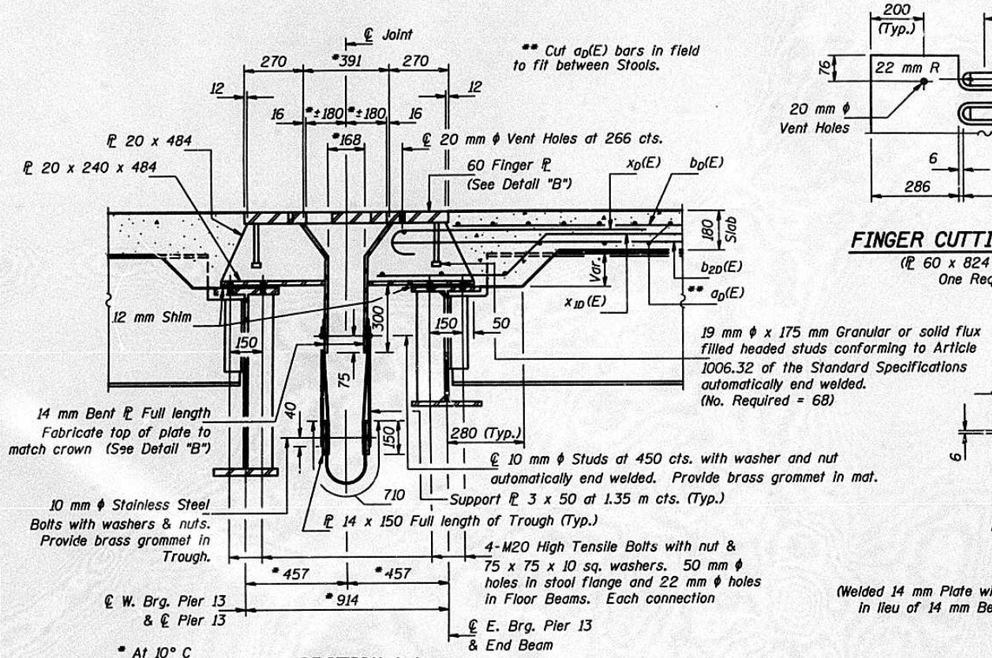

SECTION 1-1
(Looking North)

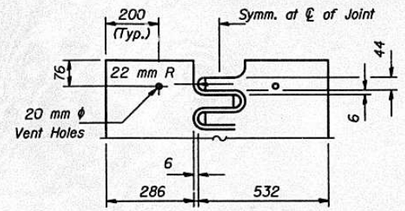

FINGER CUTTING DIAGRAM
(PL 60 x 824 x 8.852 m One Required)

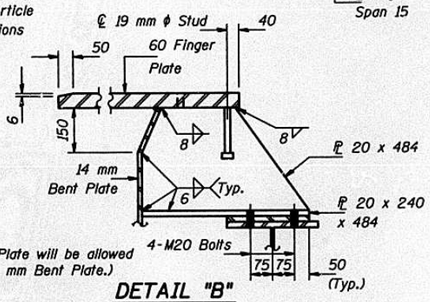

(Welded 14 mm Plate will be allowed in lieu of 14 mm Bent Plate.)

DETAIL "B"

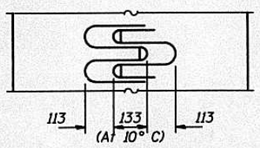

FINGER PLATE SETTING DIAGRAM

Add 1 mm per each 10 m of expansion for every 8° C above the normal temp. of 10° C. Subtract 1 mm per each 10 m of expansion for every 8° C below the normal of 10° C. (Expansion Length = 191.4 m)

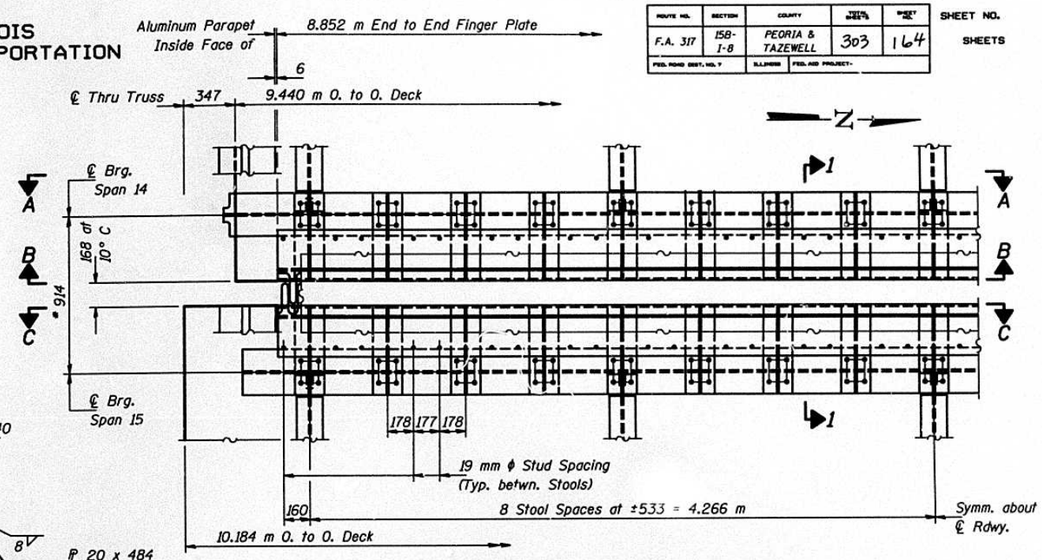

HALF PLAN

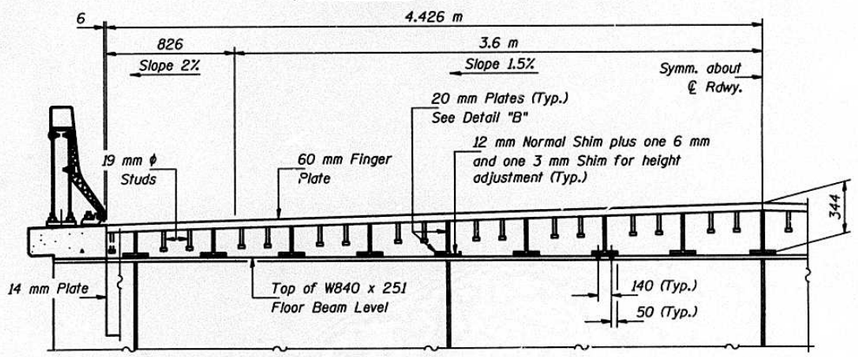

SECTION B-B

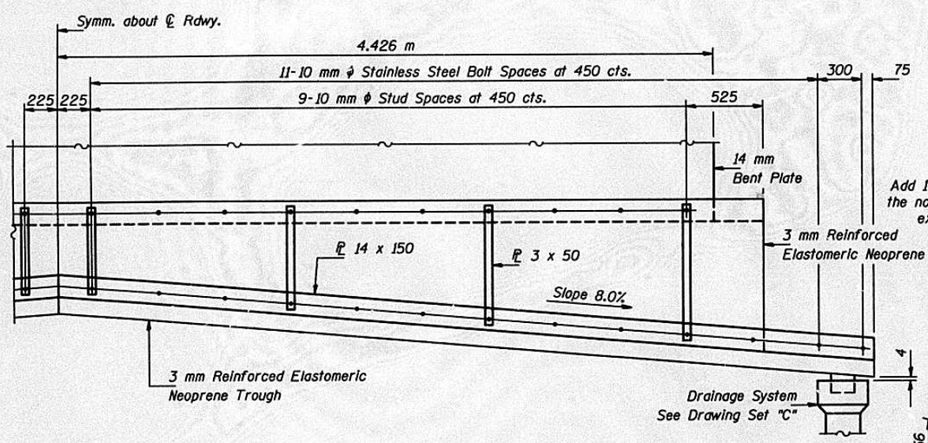

SECTION A-A

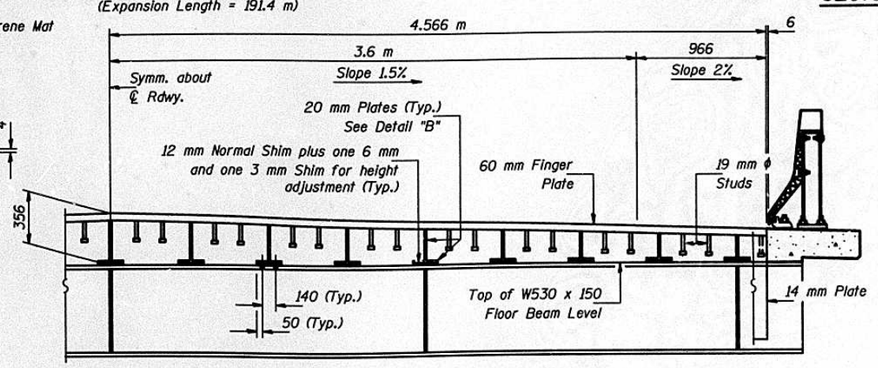

SECTION C-C

Notes: Finger Plate shall be M 270M Grade 345.

DESIGNED	Steve Negangard
CHECKED	F. Allen Smith
DRAWN	John F. Schneller Jr.
CHECKED	S.P.N. F.A.S.

March 10, 1999
EXAMINED Raj. D. Kaspar ENGINEER OF BRIDGE DESIGN
PASSED Ralph E. Anderson ENGINEER OF BRIDGES AND STRUCTURES

EXPANSION JOINT DETAILS
PIER 13
F.A. ROUTE 317 SECTION 15B-I-8
PEORIA AND TAZEWELL COUNTIES
STATION 6+791.262

DWG. NO. D12

STATE OF ILLINOIS
DEPARTMENT OF TRANSPORTATION

ROUTE NO.	SECTION	COUNTY	TOTAL SHEETS	SHEET NO.
F.A. 317	158-1-8	PEORIA & TAZEWELL	303	169
FED. ROAD DIST. NO. 7	ILLINOIS	FED. AID PROJECT-		

SHEET NO.
SHEETS

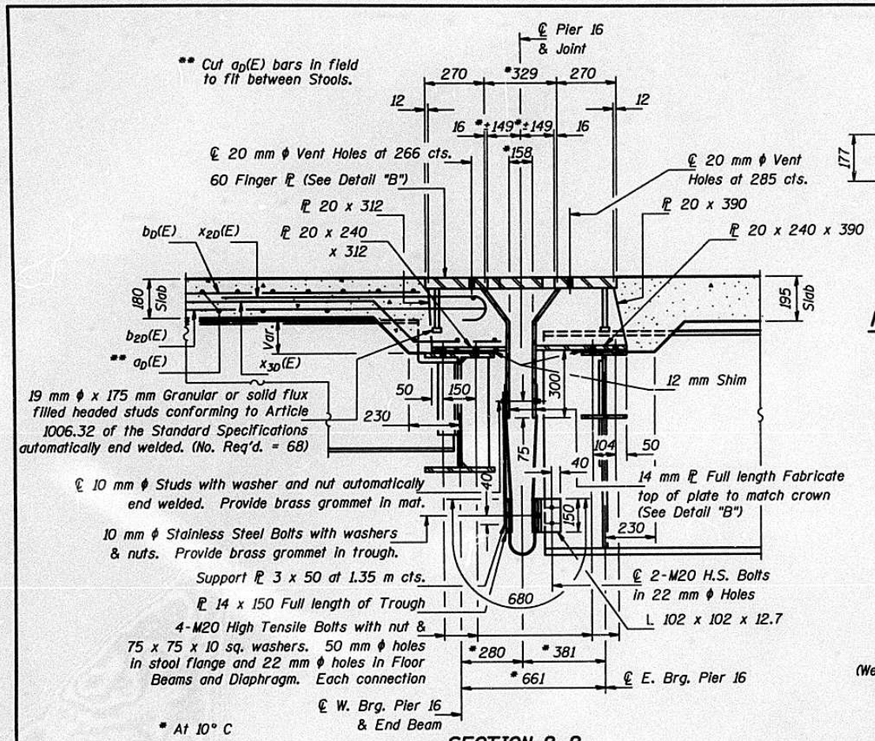

SECTION 2-2
(Looking North)

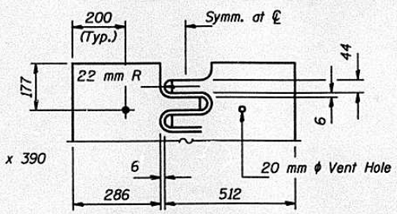

FINGER CUTTING DIAGRAM
(PL 60 x 804 x 9.132 m One Required)

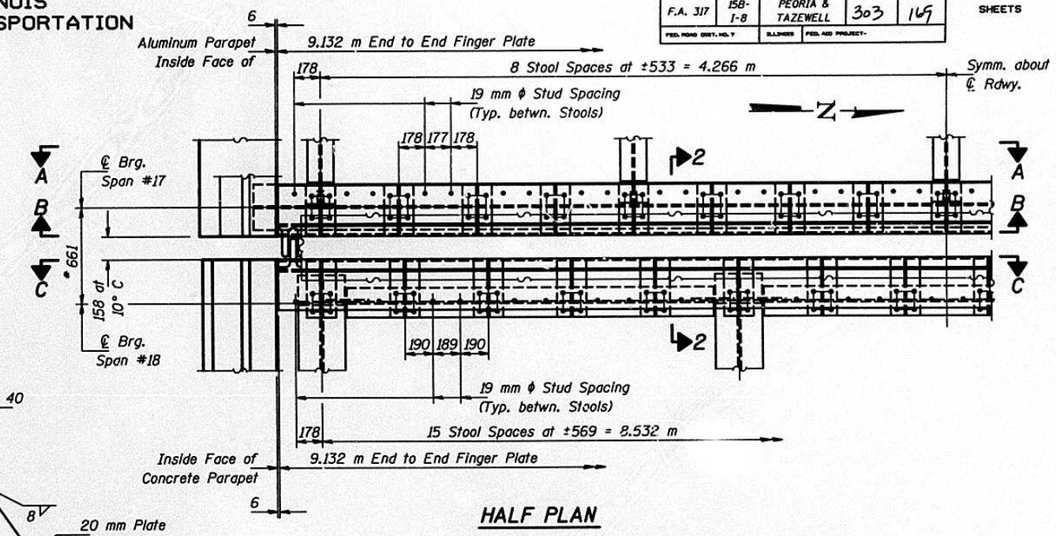

HALF PLAN

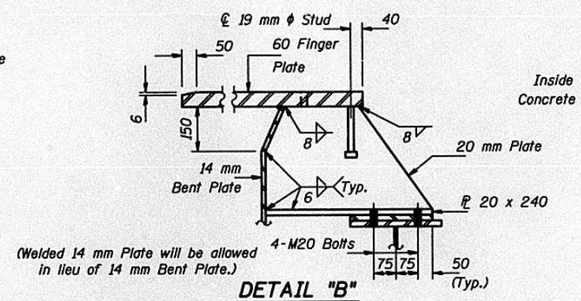

DETAIL "B"

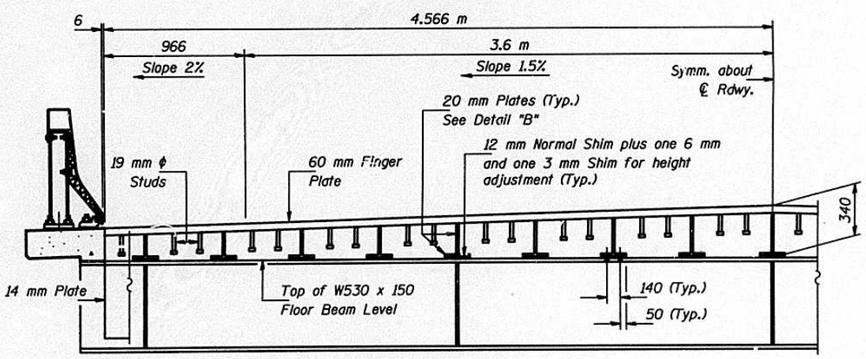

SECTION B-B

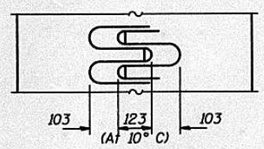

FINGER PLATE SETTING DIAGRAM

Add 1 mm per each 10 m of expansion for every 8° C above the normal temp. of 10° C. Subtract 1 mm per each 10 m of expansion for every 8° C below the normal of 10° C. (Expansion Length = 171.4 m)

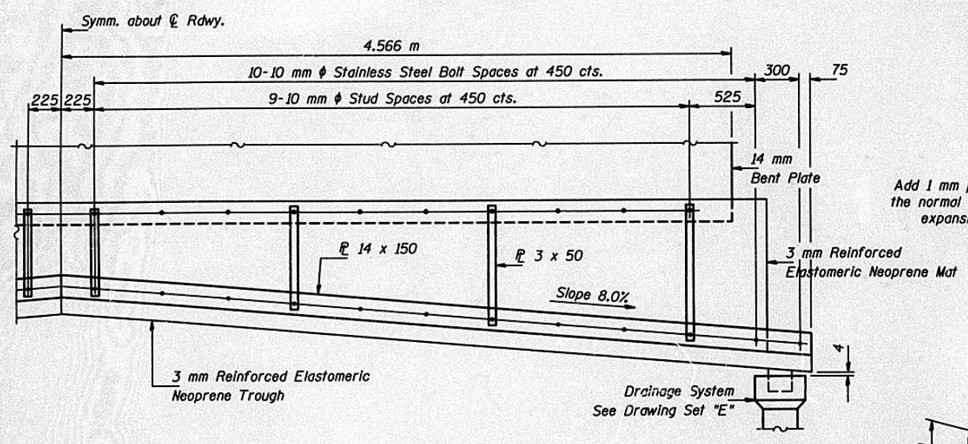

SECTION A-A

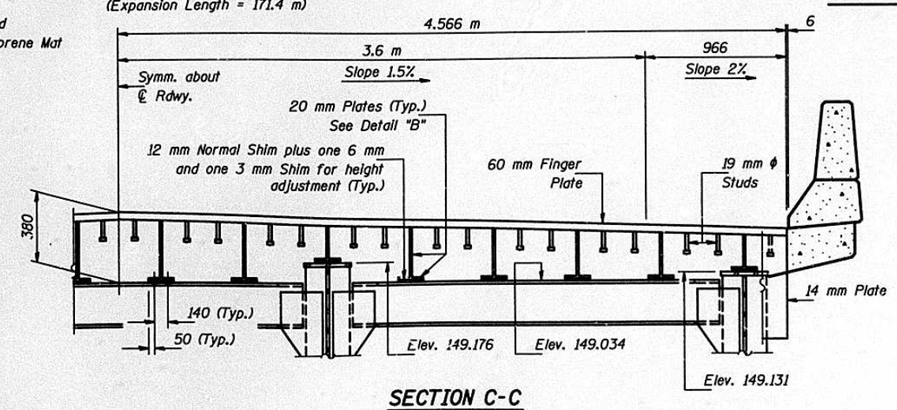

SECTION C-C

Notes: Finger Plate Steel be M 270M Grade 345.

DESIGNED	Steve Negangard
CHECKED	F. Allen Smith
DRAWN	John F. Schneller Jr.
CHECKED	S.P.N. F.A.S.

March 10, 1999
EXAMINED Greg S. Hagar ENGINEER OF BRIDGE DESIGN
PASSED Ralph E. Anderson ENGINEER OF BRIDGES AND STRUCTURES

EXPANSION JOINT DETAILS
PIER 16
F.A. ROUTE 317 SECTION 15B-1-8
PEORIA AND TAZEWELL COUNTIES
STATION 6+791.262

DWG. NO. D13

ROUTE NO.	SECTION	COUNTY	TOTAL SHEETS	SHEET NO.
F.A. 317	158-1-8	PEORIA & TAZEWELL	303	166
FED. HIGHWAY DIST. NO. 7	ILLINOIS	FED. AID PROJECT-		

SHEET NO.
SHEETS

STATE OF ILLINOIS
DEPARTMENT OF TRANSPORTATION

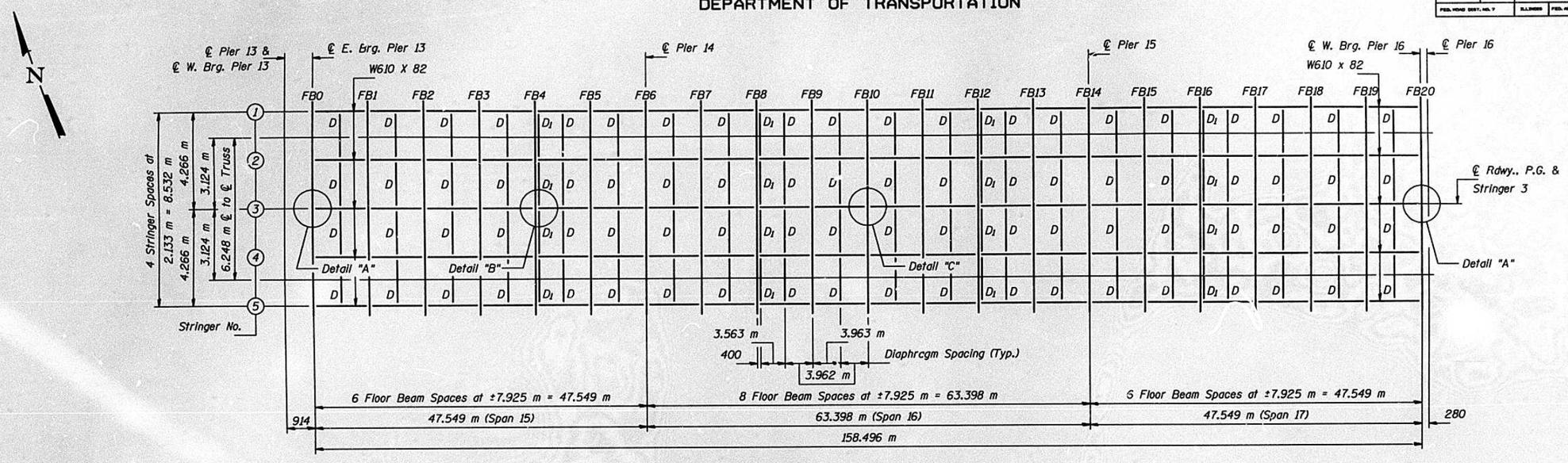

FRAMING PLAN-SPANS 15, 16 & 17

(All Stringers are W530 x 66, except as noted.)
(All Floor Beams are W610 x 153, except FB0 & FB20 are W530 x 150.)

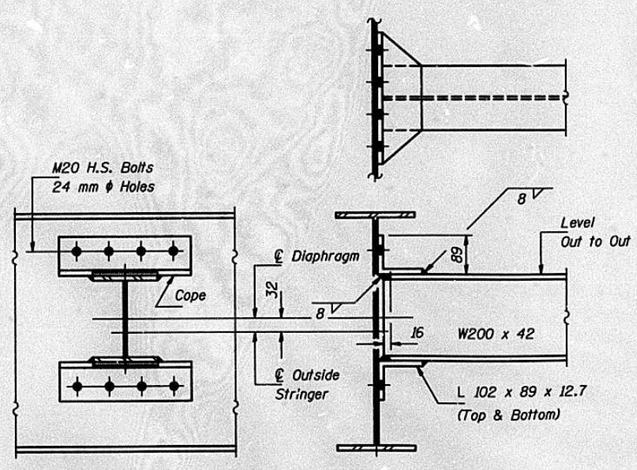

DIAPHRAGM D

(80 Required)

Note: Two hardened washers shall be required over all oversize holes.

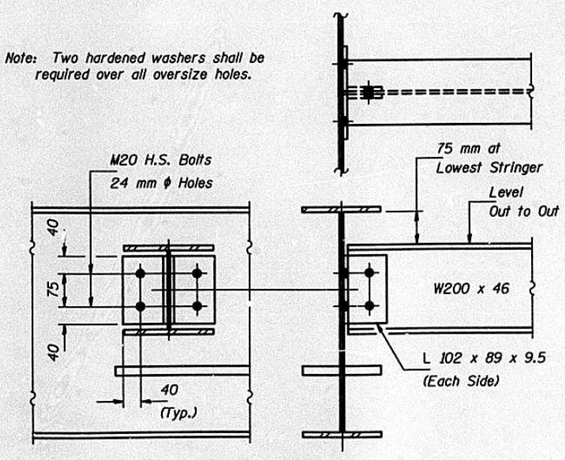

DIAPHRAGM D_1

(16 Required)

Notes: See Drawings D15 for Detail "A" & Detail "C".
See Drawing D16 for Detail "B".
All Stringers and Floor Beams shall conform to the Requirements of Notch Toughness.

DESIGNED	Steve Negangard
CHECKED	F. Allen Smith
DRAWN	John F. Schneller Jr.
CHECKED	S.P.N. F.A.S.

March 10, 1999
EXAMINED Engineer of Bridge Design
PASSED Engineer of Bridges and Structures

STRUCTURAL STEEL
SPANS 15 THRU 17
F.A. ROUTE 317 SECTION 15B-I-8
PEORIA AND TAZEWELL COUNTIES
STATION 6+791.262

DWG. NO. D14

STATE OF ILLINOIS
DEPARTMENT OF TRANSPORTATION

ROUTE NO.	SECTION	COUNTY	TOTAL SHEETS	SHEET NO.
F.A. 317	15B-1-8	PEORIA & TAZEWELL	303	167
FED. ROAD DIST. NO. 7	ILLINOIS	FED. AID PROJECT-		

SHEET NO.
SHEETS

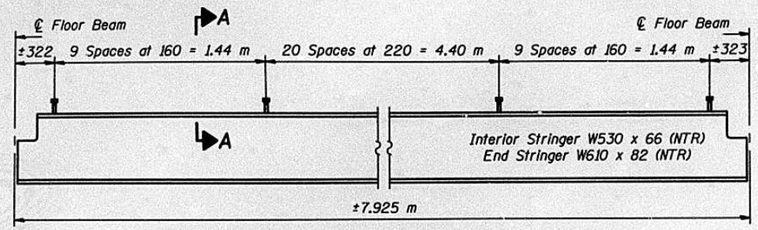

ELEVATION - SHOWING STUD SHEAR SPACING

(Typical spacing for all Stringers.)
"NTR" denotes Stringers to which Notch Toughness Requirements are applicable.

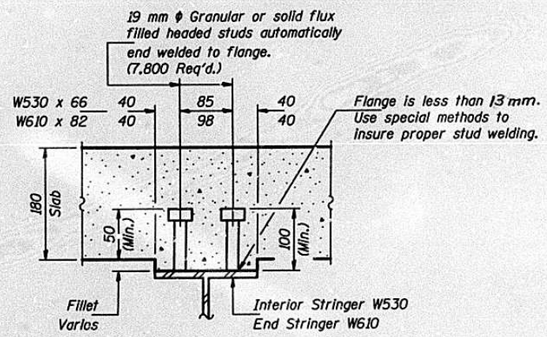

SECTION A-A

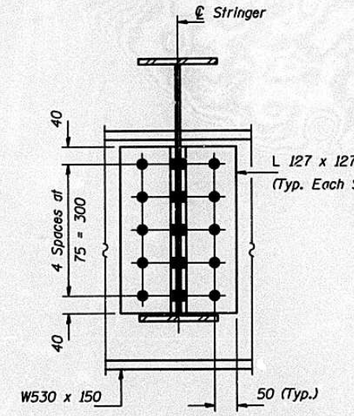

SECTION C-C

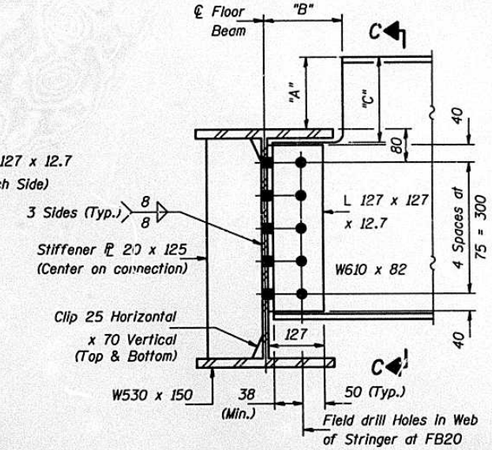

DETAIL "A"

(Looking North FB0)
(Looking South FB20)

MAXIMUM COPE

W610 x 82
"B" = 160
"C" = 190

DIMENSION "A" SPANS 15, 16 & 17

Stringer No. \ Loc.	FB0	FB20
1 & 5	95	60
2 & 4	130	95
3	160	125

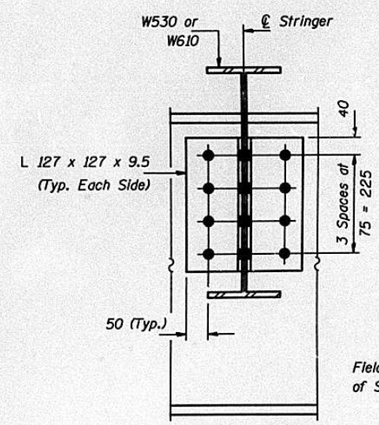

SECTION B-B

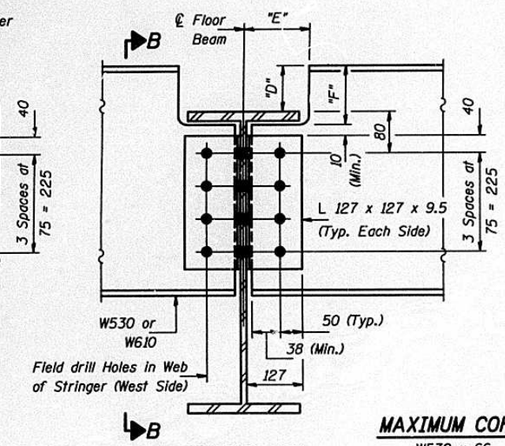

DETAIL "C"

(Looking North)

MAXIMUM COPE

W530 x 66
"E" = 115
"F" = 155

DIMENSION "D" - SPANS 15, 16 & 17

Stringer No. \ Loc.	FB1	FB2	FB3	FB5	FB6	FB7	FB9	FB10	FB11	FB13	FB14	FB15	FB17	FB18	FB19
1 & 5	20	40	40	40	20	40	60	60	60	40	20	20	40	20	20
2 & 4	55	75	75	75	55	75	95	95	95	75	55	55	75	55	55
3	85	105	105	105	85	105	125	125	125	105	85	85	105	85	85

DESIGNED Steve Negangard	
CHECKED F. Allen Smith	
DRAWN John F. Schneller Jr.	
CHECKED S.P.N.	F.A.S.

March 10, 1999
EXAMINED Jay J. Kaspar ENGINEER OF BRIDGE DESIGN
PASSED Ralph E. Anderson ENGINEER OF BRIDGES AND STRUCTURES

STRUCTURAL STEEL DETAILS
SPANS 15 THRU 17
F.A. ROUTE 317 SECTION 15B-1-8
PEORIA AND TAZEWELL COUNTIES
STATION 6+791.262

DWG. NO. D15

TAMERAN

ROUTE NO.	SECTION	COUNTY	TOTAL SHEETS	SHEET NO.
F.A. 317	158-1-8	PEORIA & TAZEWELL	303	168
FED. ROAD DIST. NO. 7	ILLINOIS	FED. AID PROJECT-		

SHEET NO.
SHEETS

STATE OF ILLINOIS
DEPARTMENT OF TRANSPORTATION

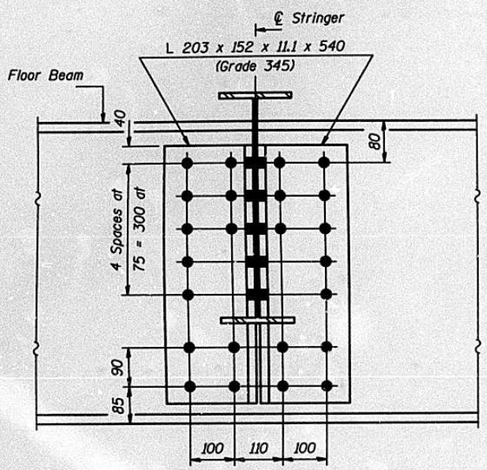

SECTION B-B

MAXIMUM COPE

W530 x 66
"B" = 115
"C" = 135

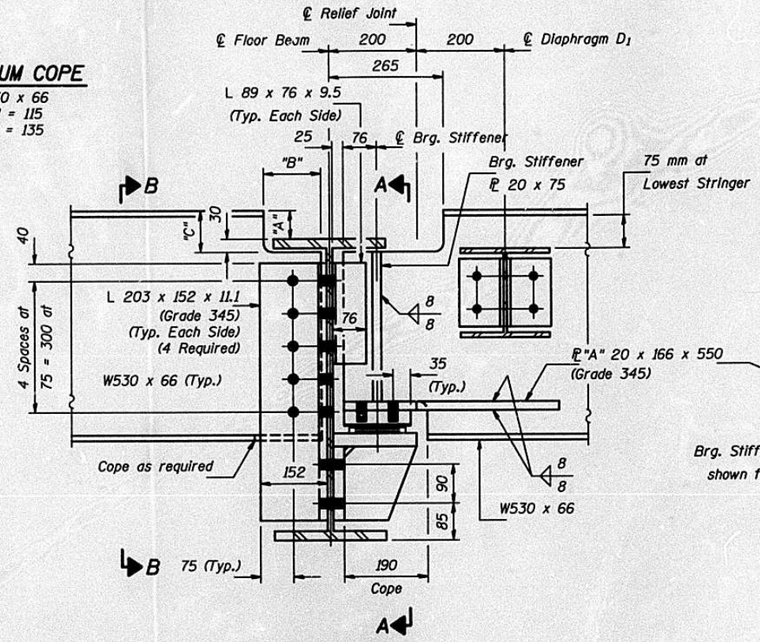

DETAIL "B"

(Looking North)

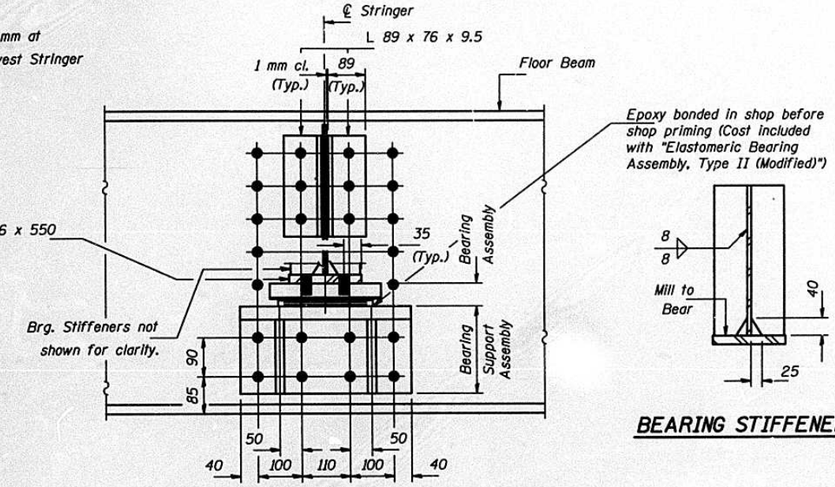

SECTION A-A

BEARING STIFFENERS

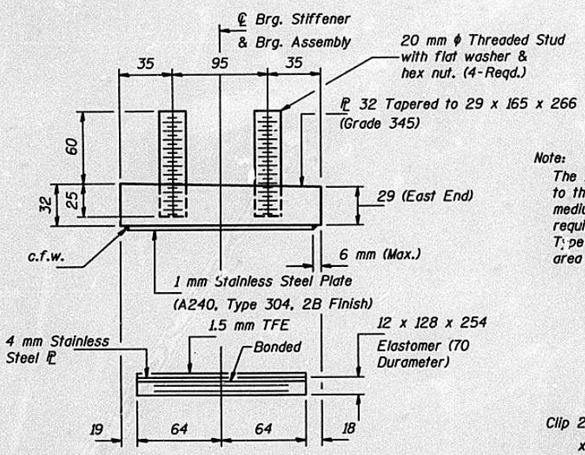

BEARING ASSEMBLY

DIMENSION "A" - SPANS 15, 16 & 17

Stringer No. \ Loc.	FB4	FB8	FB12	FB16
1 & 5	40	40	20	20
2 & 4	75	75	55	55
3	105	105	85	85

Note: Dimensions "B" & "C" will vary. Do not exceed the maximum cope without approval of the Engineer.

Note:
The 1.5 mm TFE sheet shall be bonded directly to the 4 mm stainless steel plate with a two-component, medium viscosity epoxy resin, conforming to the requirements of the Federal Specification MMM-A-134, Type I. The bond agent shall be applied on the full area of the contact surfaces.

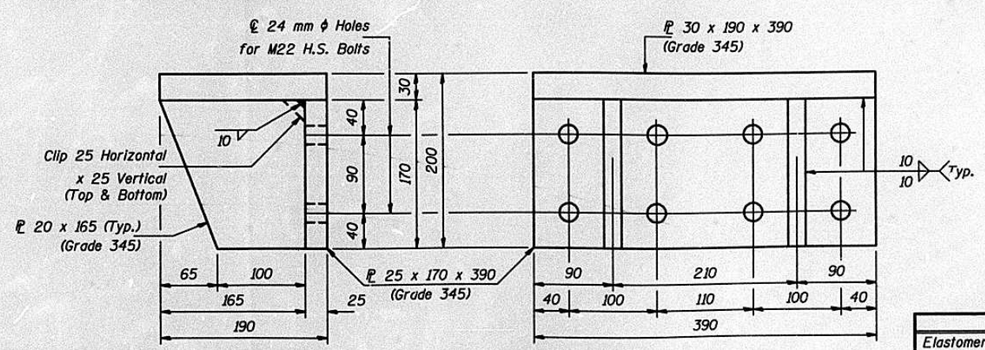

BEARING SUPPORT ASSEMBLY

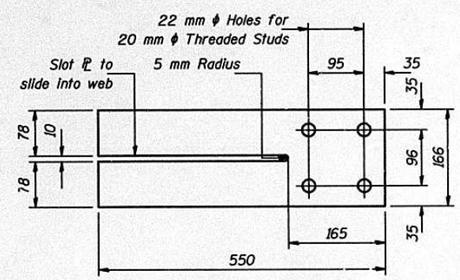

PLATE "A"

BILL OF MATERIAL

Item	Unit	Total
Elastomeric Bearing Assembly Type II (Modified)	Each	20

DESIGNED	Steve Negangard
CHECKED	F. Allen Smith
DRAWN	John F. Schneller Jr.
CHECKED	S.P.N. F.A.S.

March 10, 1999
EXAMINED — ENGINEER OF BRIDGE DESIGN
PASSED — ENGINEER OF BRIDGES AND STRUCTURES

STRUCTURAL STEEL DETAILS
SPANS 15 THRU 17
F.A. ROUTE 317 SECTION 15B-I-8
PEORIA AND TAZEWELL COUNTIES
STATION 6+791.262

DWG. NO. D16

D C B A 0 A B C
TAMERAN

STATE OF ILLINOIS
DEPARTMENT OF TRANSPORTATION

ROUTE NO.	SECTION	COUNTY	TOTAL SHEETS	SHEET NO.	SHEET NO.
F.A. 317	15B-I-8	PEORIA & TAZEWELL	303	169	SHEETS
FED. ROAD DIST. NO. 7	ILLINOIS	FED. AID PROJECT-			

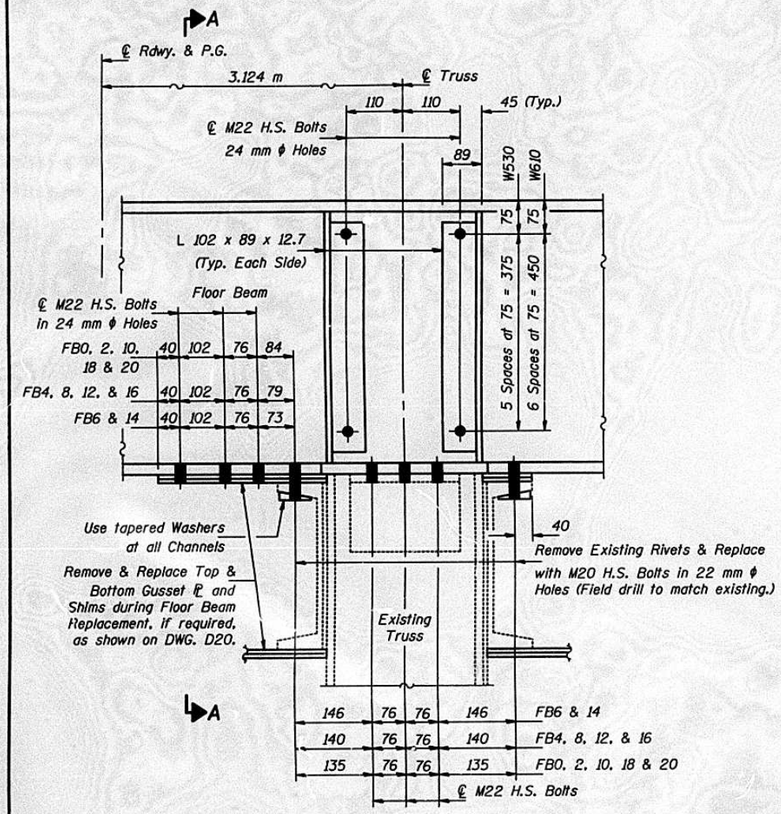

FLOOR BEAM CONNECTION DETAIL

(At Floor Beams FB0, 2, 4, 6, 8, 10, 12, 14, 16, 18 & 20.
Only one Floor Beam may be replaced at a time.)

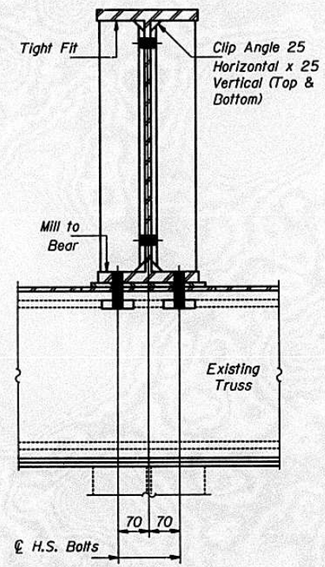

SECTION A-A

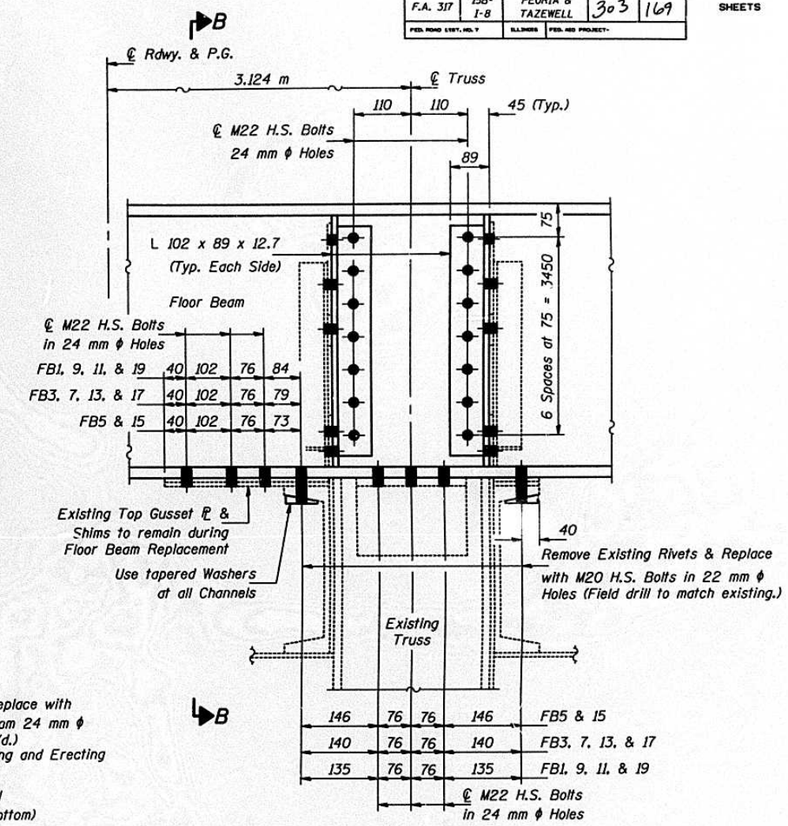

FLOOR BEAM CONNECTION DETAIL

(At Floor Beams FB1, 3, 5, 7, 9, 11, 13, 15, 17 & 19.
Only one Floor Beam may be replaced at a time.)

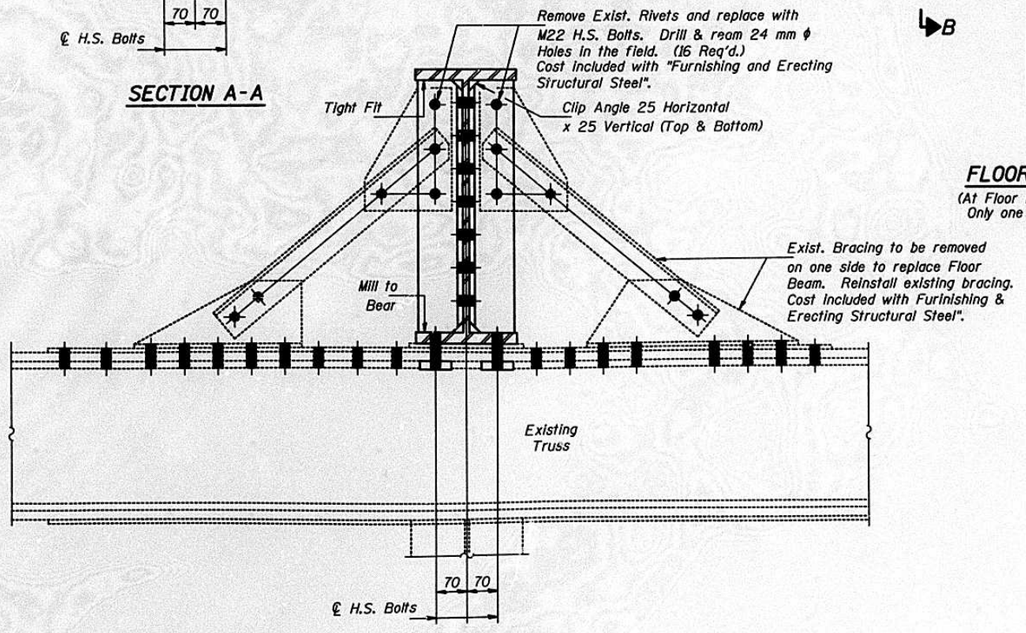

SECTION B-B

Notes: Existing bracing not shown in details for clarity.
Field drill holes in Floor Beams and shim to
match existing.

DESIGNED	Steve Negangard
CHECKED	F. Allen Smith
DRAWN	John F. Schneller Jr.
CHECKED	S.P.N. F.A.S.

March 10, 1999
EXAMINED Raj. D. Kaspar ENGINEER OF BRIDGE DESIGN
PASSED Ralph E. Anderson ENGINEER OF BRIDGES AND STRUCTURES

STRUCTURAL STEEL DETAILS
SPANS 15 THRU 17
F.A. ROUTE 317 SECTION 15B-I-8
PEORIA AND TAZEWELL COUNTIES
STATION 6+791.262

DWG. NO. D17

C B A 0 A B C D
TAMERAN

STATE OF ILLINOIS
DEPARTMENT OF TRANSPORTATION

ROUTE NO.	SECTION	COUNTY	TOTAL SHEETS	SHEET NO.
F.A. 317	15B-I-8	PEORIA & TAZEWELL	303	170
FED. ROAD DIST. NO. 7	ILLINOIS	FED. AID PROJECT-		

SHEET NO.
SHEETS

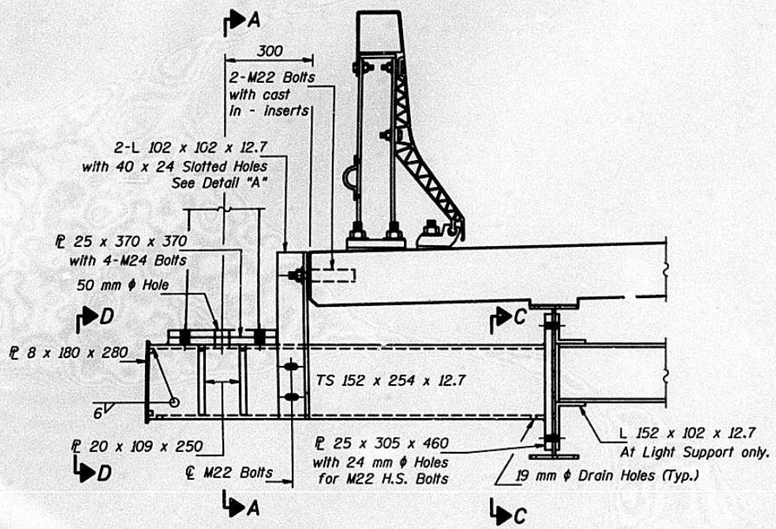

SECTION AT LIGHT SUPPORT

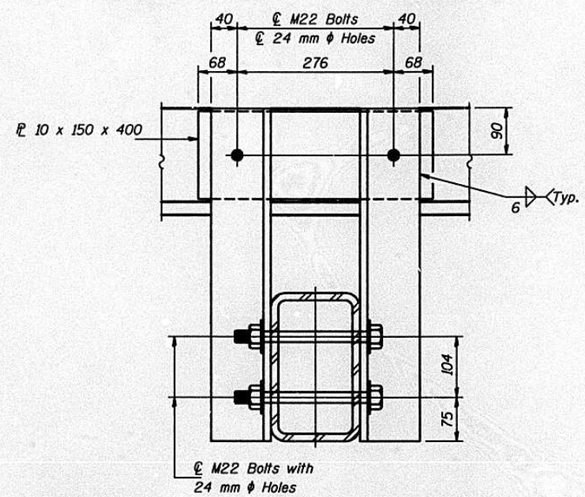

DETAIL "A"

NOTES

Hollow structural steel tubing shall conform to the requirements of ASTM designation A 500 Grade B Structural Steel Tubing and shall meet the longitudinal CVN requirements of 20 N·m at +4 °C.

All other steel shapes and plates shall conform to the requirements of AASHTO M 270M, Grade 250.

Bolts, cap screws, and nuts shall conform to the requirements of ASTM designation A 307 except for high strength bolts, nuts and washers noted which shall conform to AASHTO M 164M.

All bolts, nuts, cap screws, washers and lock washers shall be galvanized according to AASHTO M 232.

All tubes and angles shall be hot dip galvanized after fabrication according to AASHTO M 111.

Quantity for light supports shall be included with "Furnishing and Erecting Structural Steel".

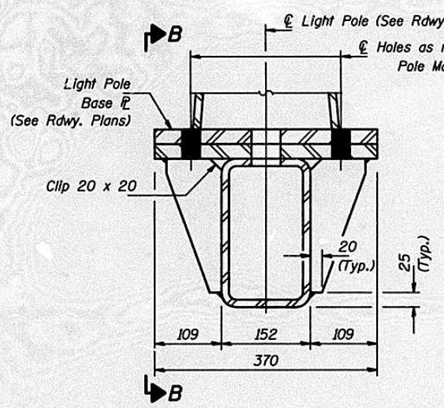

SECTION A-A

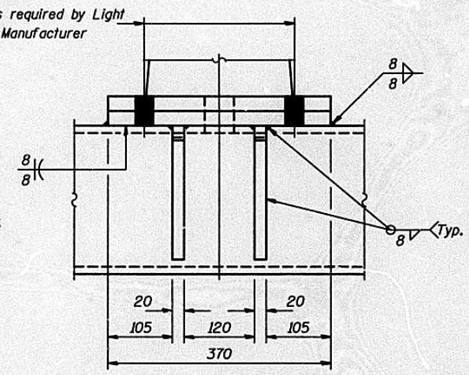

VIEW B-B

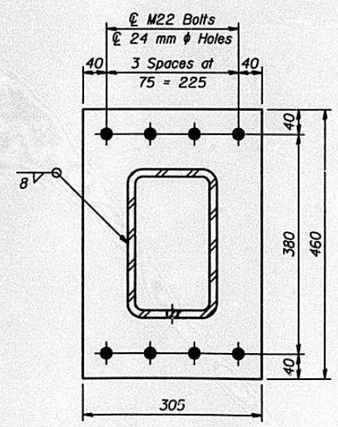

SECTION C-C

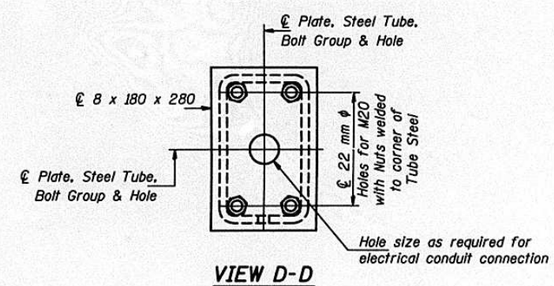

VIEW D-D

DESIGNED	Steve Negangard
CHECKED	F. Allen Smith
DRAWN	John F. Schneller Jr.
CHECKED	S.P.N. F.A.S.

March 10, 1999
EXAMINED Greg J. Kasper ENGINEER OF BRIDGE DESIGN
PASSED Ralph E. Anderson ENGINEER OF BRIDGES AND STRUCTURES

Notes:
Light Support to be at midspan of Stringers.
See Drawing 1 for location of lights.

LIGHT SUPPORT DETAILS
F.A. ROUTE 317 SECTION 15B-I-8
PEORIA AND TAZEWELL COUNTIES
STATION 6+791.262

DWG. NO. D18

ROUTE NO.	SECTION	COUNTY	TOTAL SHEETS	SHEET NO.
F.A. 317	15B-1-8	PEORIA & TAZEWELL	303	171
FED. ROAD DIST. NO. 7	ILLINOIS	FED. AID PROJECT-		

SHEET NO.
SHEETS

STATE OF ILLINOIS
DEPARTMENT OF TRANSPORTATION

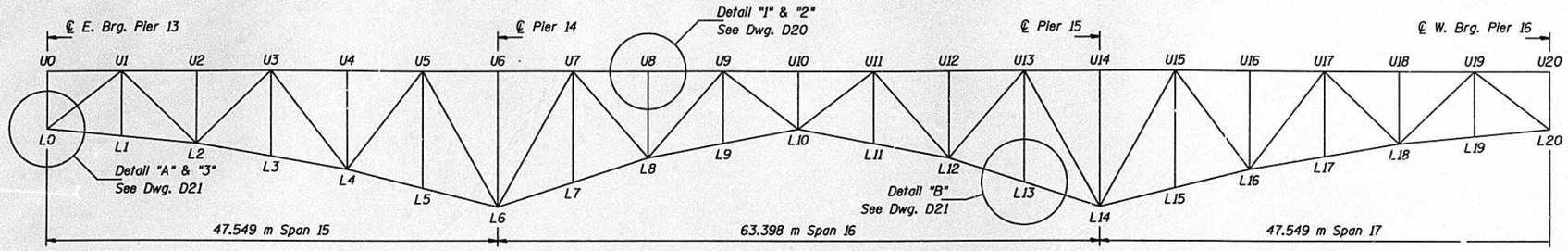

ELEVATION - NORTH TRUSS SPANS 15 THRU 17

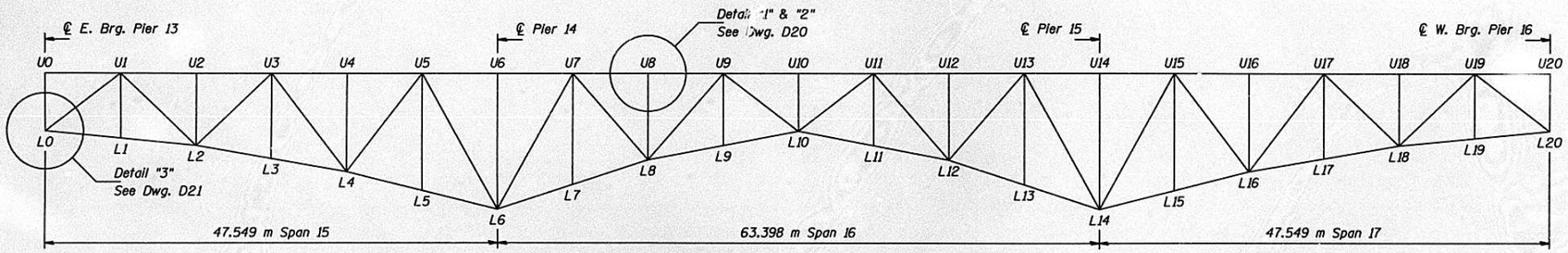

ELEVATION - SOUTH TRUSS SPANS 15 THRU 17

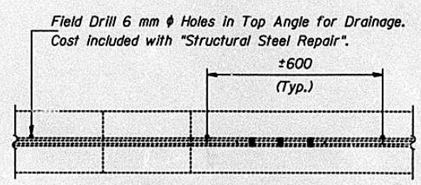

PLAN VIEW
DRAIN HOLE DETAIL

Note: All Elevations are looking North.

DRAIN HOLE LOCATION TABLE

Span	Member	Location
16	L7N-L7S	Lower Cross-Bracing
16	L8S-L8N	Lower Cross-Bracing
17	L15N-L15S	Lower Cross-Bracing

DESIGNED	Steve Negangard
CHECKED	F. Allen Smith
DRAWN	John F. Schneller Jr.
CHECKED	S.P.N. F.A.S.

March 10, 1999
EXAMINED Roy J. Kaspar
ENGINEER OF BRIDGE DESIGN
PASSED Ralph E. Anderson
ENGINEER OF BRIDGES AND STRUCTURES

TRUSS REPAIR LAYOUT
SPANS 15 THRU 17
F.A. ROUTE 317 SECTION 15B-1-8
PEORIA AND TAZEWELL COUNTIES
STATION 6+791.262

DWG. NO. D19

STATE OF ILLINOIS
DEPARTMENT OF TRANSPORTATION

ROUTE NO.	SECTION	COUNTY	TOTAL SHEETS	SHEET NO.
F.A. 317	15B-1-8	PEORIA & TAZEWELL	303	172
FED. ROAD DIST. NO. 7	ILLINOIS	FED. AID PROJECT-		

SHEET NO.
SHEETS

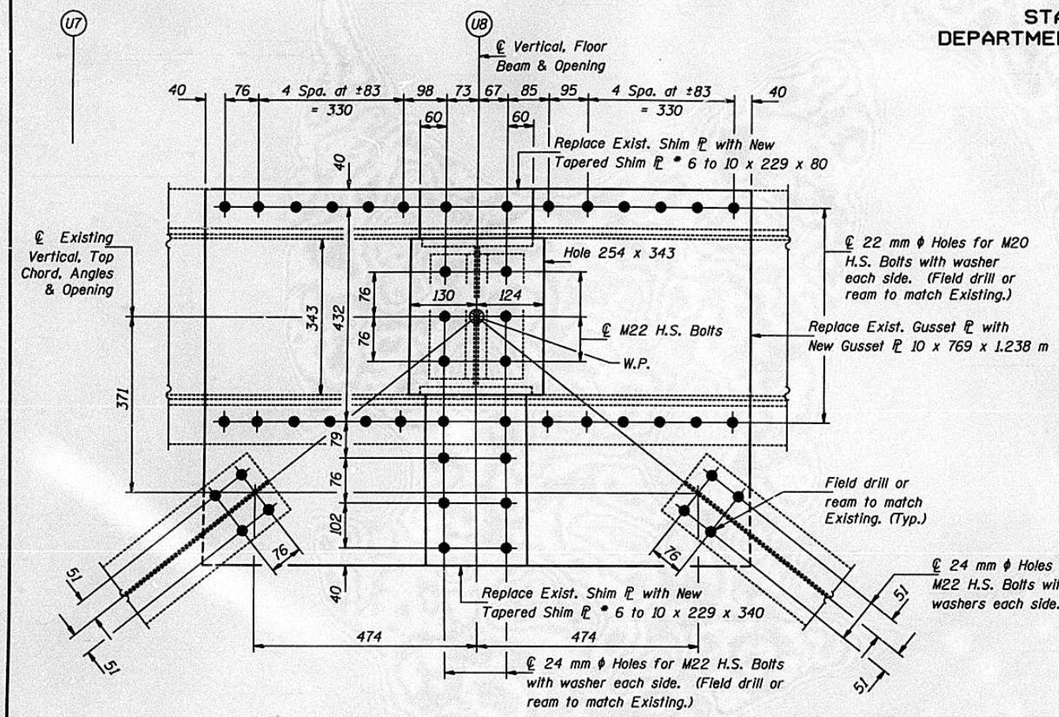

* Thickest side to the East.

DETAIL 1
TOP HORIZ. GUSSET ℙ REPLACEMENT

(See Table for Locations.)
(See DWG. D19 for Elevation View.)
North Truss as shown
South Truss opposite hand.

GUSSET ℙ REPLACEMENT
SPANS 15 THRU 17

Span	Truss	Joint	Plate	Detail
15	North	L0	Horizontal	3
15	South	L0	Horizontal	3
16	North	U8	Top & Bottom	1 & 2
16	South	U8	Top & Bottom	1 & 2

Only one Plate shall be removed at any given time.

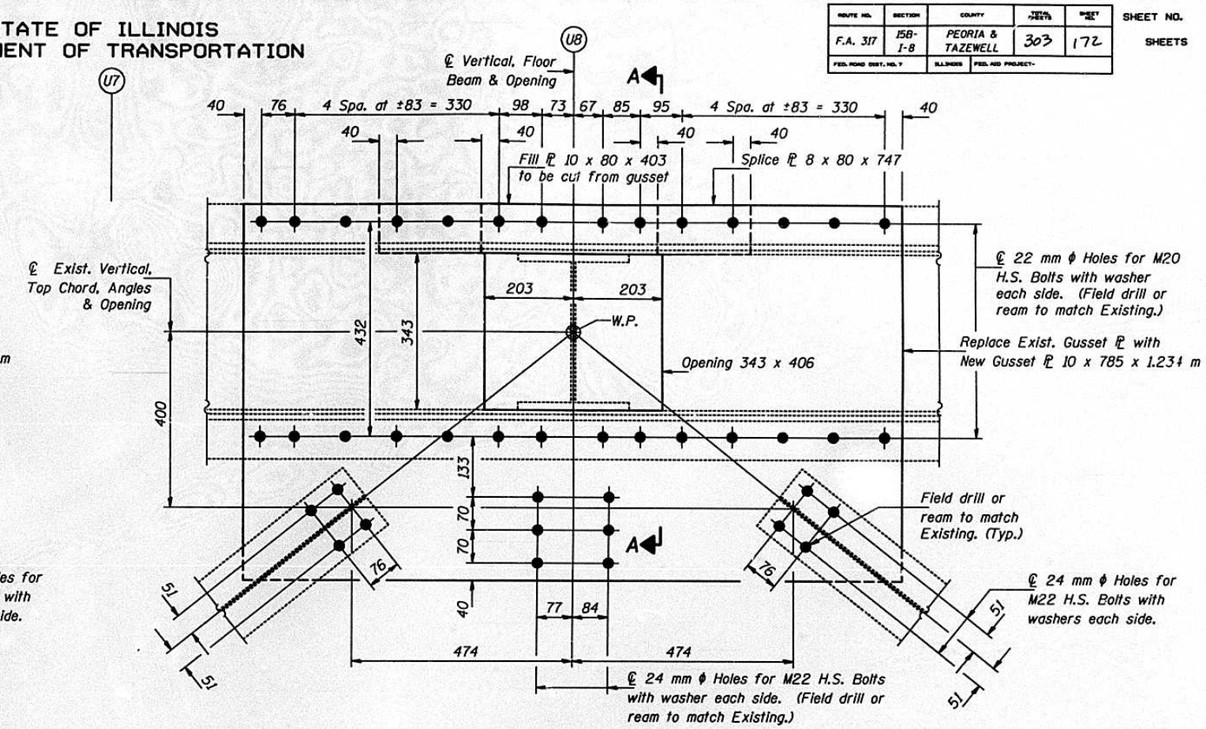

DETAIL 2
BOTTOM HORIZ. GUSSET ℙ REPLACEMENT

(See Table for Locations.)
(See DWG. D19 for Elevation View.)
North Truss as shown
South Truss opposite hand.

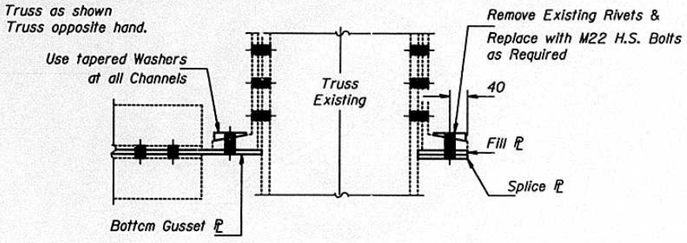

SECTION A-A

Notes: Cost of Field Drilling is included with "Structural Steel Repair".
Cost of Rivet removal is included with "Structural Steel Repair".
Use tapered Washers at all Channels.
See Drawing D21 for Detail "3".
Cost of all work on this Drawing is included with "Structural Steel Repair".

DESIGNED	Steve Negangard
CHECKED	F. Allen Smith
DRAWN	John F. Schneller Jr.
CHECKED	S.P.N. F.A.S.

March 10, 1999
EXAMINED Engineer of Bridge Design
PASSED Engineer of Bridges and Structures

GUSSET PLATE REPLACEMENT
SPANS 15 THRU 17
F.A. ROUTE 317 SECTION 15B-1-8
PEORIA AND TAZEWELL COUNTIES
STATION 6+791.262

DWG. NO. D20

STATE OF ILLINOIS
DEPARTMENT OF TRANSPORTATION

ROUTE NO.	SECTION	COUNTY	TOTAL SHEETS	SHEET NO.
F.A. 317	15B-1-8	PEORIA & TAZEWELL	303	173
FED. ROAD DIST. NO. 7		ILLINOIS	FED. AID PROJECT-	

SHEET NO.
SHEETS

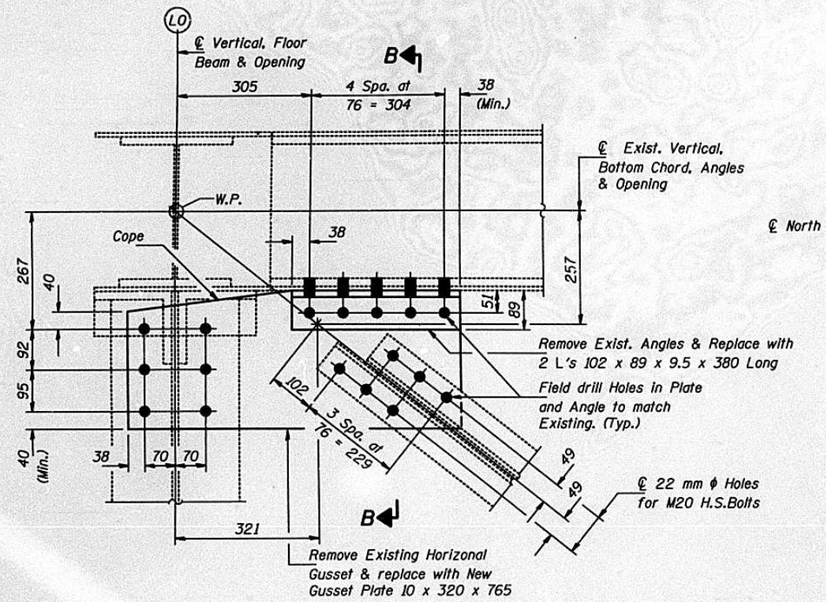

DETAIL 3
LOWER HORIZ. GUSSET PL REPLACEMENT

(See Table DWG D20 for Locations.)
Cost of Rivet removal is included with "Structural Steel Repair".

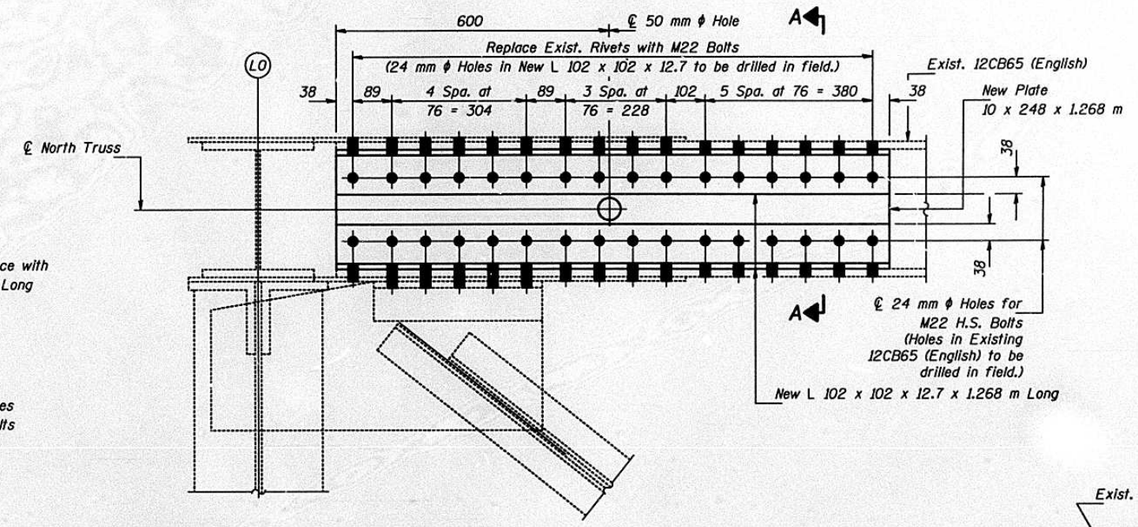

DETAIL "A"
LOWER HORIZ. LO - L1 MEMBER REPAIR

(Span 15 only.)
(One Angle to be installed at a time.)
Cost of Rivet removal is included with "Structural Steel Repair".

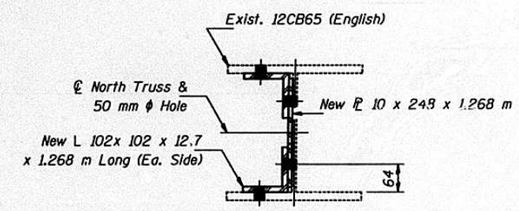

SECTION A-A

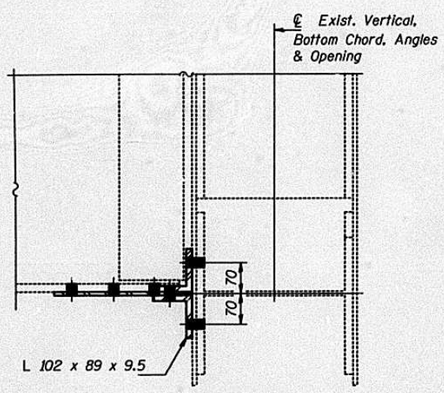

SECTION B-B

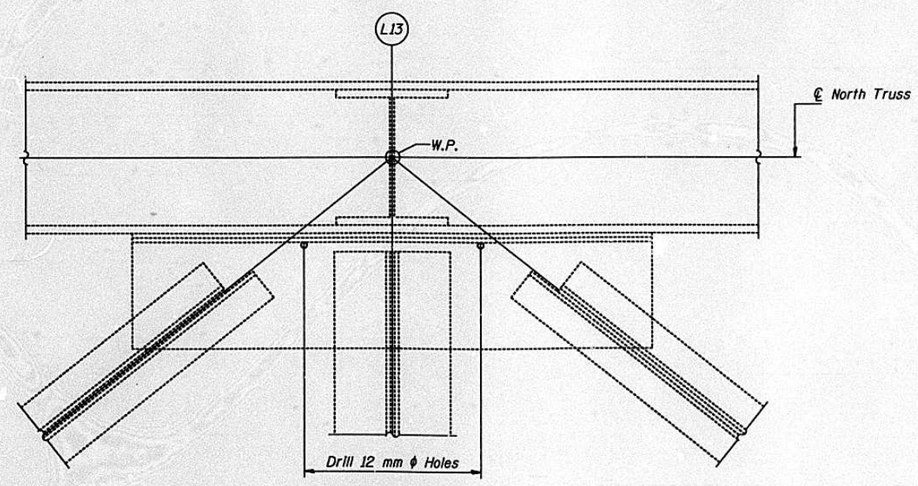

DETAIL "B"
LOWER HORIZ. GUSSET PL DRAIN HOLES

Notes: Cost of Field Drilling is included with "Structural Steel Repair".
Use tapered Washers at all Channels.
Cost of all work on this Drawing is included with "Structural Steel Repair".

DESIGNED	Steve Negangard
CHECKED	F. Allen Smith
DRAWN	John F. Schneller Jr.
CHECKED	S.P.N. F.A.S.

March 10, 1999
EXAMINED Jerzy J. Kaspar — ENGINEER OF BRIDGE DESIGN
PASSED Ralph E. Anderson — ENGINEER OF BRIDGES AND STRUCTURES

GUSSET PLATE REPLACEMENT
SPANS 15 THRU 17
F.A. ROUTE 317 SECTION 15B-1-8
PEORIA AND TAZEWELL COUNTIES
STATION 6+791.262

DWG. NO. D21

D C B A 0 A B C
TAMERAN

STATE OF ILLINOIS
DEPARTMENT OF TRANSPORTATION

ROUTE NO.	SECTION	COUNTY	TOTAL SHEETS	SHEET NO.
F.A. 317	15B-1-8	PEORIA & TAZEWELL	303	174
FED. ROAD DIST. NO. 7		ILLINOIS	FED. AID PROJECT-	

SHEET NO.
SHEETS

GENERAL NOTES

Fasteners shall be high strength bolts. Bolts M22, open holes 24 mm ϕ, unless otherwise noted.

The existing structural steel coating contains lead. The Contractor should take appropriate precautions to deal with the presence of lead on this project.

The inorganic zinc rich primer / Acrylic / Acrylic Paint System shall be used for shop and field painting of new structural steel except where otherwise noted. The color of the final finish coat shall be Blue, Munsell No. 10B 3/6. See Special Provision "Cleaning and Painting New Metal Structures".

Field welding of construction accessories will not be permitted to the bottom flange of girders or beams nor to the top flange for a distance equal to one-fourth the span length each way from the pier supports. Field welding in other areas will be permitted only when approved by the Engineer.

Anchor bolts shall be set before bolting diaphragms over supports.

The main load carrying member components subject to tensile stress shall conform to the Supplemental Requirements for Notch Toughness Zone 2. These components are the wide flange beams, all splice plate material of both the wide flange beams and the plate girders and the tension flanges and webs of the plate girders.

Reinforcement bars shall conform to the requirements of AASHTO M-31M, M-42M or M-53M Grade 400.

Plan dimensions and details relative to existing structure have been taken from existing plans and are subject to nominal construction variations. It shall be the Contractor's responsibility to verify such dimensions and details in the field and make necessary approved adjustments prior to construction or ordering of materials. Such variations shall not be cause for additional compensation for a change in the scope of the work, however, the Contractor will be paid for the quantity actually furnished at the unit price bid for the work.

All dimensions are in millimeters (mm) unless otherwise noted.

Removal of the existing handrail, existing lighting system, existing wearing surface, existing waterproofing membrane system and existing steel grid in the approach spans is included with "Removal of Existing Superstructures".

BILL OF MATERIAL

ITEM	UNIT	"E"
Bituminous Concrete Removal (Deck)	m^2	—
Deck Slab Repair (Partial)	m^2	—
Deck Slab Repair (Full Depth Type I)	m^2	—
Deck Slab Repair (Full Depth Type II)	m^2	—
Bridge Deck Scarification 20 mm	m^2	—
Bridge Deck Scarification 50 mm	m^2	—
Bridge Deck Concrete Overlay Option	m^2	—
Removal of Existing Concrete Deck	L.S.	—
Removal of Existing Superstructures	Each	1
Structural Steel Removal	kg	—
Bridge Handrail Removal	m	—
Concrete Superstructure	m^3	875.5
Reinforcement Bars, Epoxy Coated	kg	146,850
Drainage Scuppers (Special)	Each	34
Floor Drains	Each	—
Drainage System	L.S.	*
Bridge Deck Grooving	m^2	2,857
Protective Coat	m^2	3,811
Name Plates	Each	—
Aluminum Parapet	m	—
Modular Expansion Joint 320 mm	m	—
Modular Expansion Joint 400 mm	m	—
Silicone Joint Sealer 25 mm	m	—
Preformed Joint Seal 45 mm	m	—
Preformed Joint Seal 102 mm	m	10.1
Neoprene Expansion Joint 100 mm	m	29.4
Reinforced Neoprene Expansion Joint Treatment	m	—
Structural Steel Repair	kg	—
Furnishing & Erecting Structural Steel	L.S.	0.34
Stud Shear Connectors	Each	13,475
Rivet Removal & Replacement	Each	—
Field Measurements	L.S.	0.2
Remove and Reinstall Bearings	Each	—
Elastomeric Bearing Assembly Type II (Modified)	Each	—
Elastomeric Bearing Assembly Type I	Each	—
Elastomeric Bearing Assembly Type II	Each	—
Floating Bearings, Guided Expansion, 1000 kN	Each	—
Floating Bearings, Guided Expansion, 1500 kN	Each	—
Floating Bearings, Guided Expansion, 10000 kN	Each	—
Wind Anchorage Assembly Replacement	Each	—
Cleaning and Painting Steel Bridge	L.S.	—
Power Tool Cleaning Residue Containment and Disposal	L.S.	—
Blasting Residue Containment and Disposal	L.S.	—
Temporary Support System	Each	—
Jacking and Cribbing	Each	—
Structure Excavation	m^3	—
Concrete Removal	m^3	—
Concrete Structures	m^3	—
Formed Concrete Repair (Depth Equal To or Less Than 125 mm)	m^2	—
Formed Concrete Repair (Depth Greater Than 125 mm)	m^2	—
Epoxy Crack Sealing	m	—
Bridge Seat Sealer	m^2	—
Stone Riprap Class A4	m^2	—
Filter Fabric for use with Riprap	m^2	—
Furnishing Steel Piles HP310 x 94	m	—
Driving Steel Piles	m	—

Calculated Mass of Structural Steel	UNIT	"E"
AASHTO M 270M, Grade 250	kg	35,800
AASHTO M 270M, Grade 345	kg	368,250

* Included with Set "D".

DRAWING SET INDEX

INDEX FOR SET "E" EAST APPROACH (SPAN 18 - 30)

DESIGNED S. Moynihan	March 10, 1999
CHECKED S.D. Gnann	EXAMINED Sigi S. Kaspar, ENGINEER OF BRIDGE DESIGN
DRAWN John F. Schneller Jr.	PASSED Robert E. Anderson, ENGINEER OF BRIDGES AND STRUCTURES
CHECKED S.E.M. S.D.G. J.K.K.	

McCLUGAGE BRIDGE (E.B.)
U.S. 150 AND U.S. 24 OVER
THE ILLINOIS RIVER
F.A. ROUTE 317 SECTION 15B-I-8
PEORIA AND TAZEWELL COUNTIES
STATION 6+791.262
STRUCTURE NO. 090-0070 (E.B.)

DWG. NO. E1

175

ROUTE NO.	SECTION	COUNTY	TOTAL SHEETS	SHEET NO.
F.A. 317	15B-1-8	PEORIA & TAZEWELL	303	175
FED. ROAD DIST. NO. 7	ILLINOIS	FED. AID PROJECT-		

SHEET NO.
SHEETS

STATE OF ILLINOIS
DEPARTMENT OF TRANSPORTATION

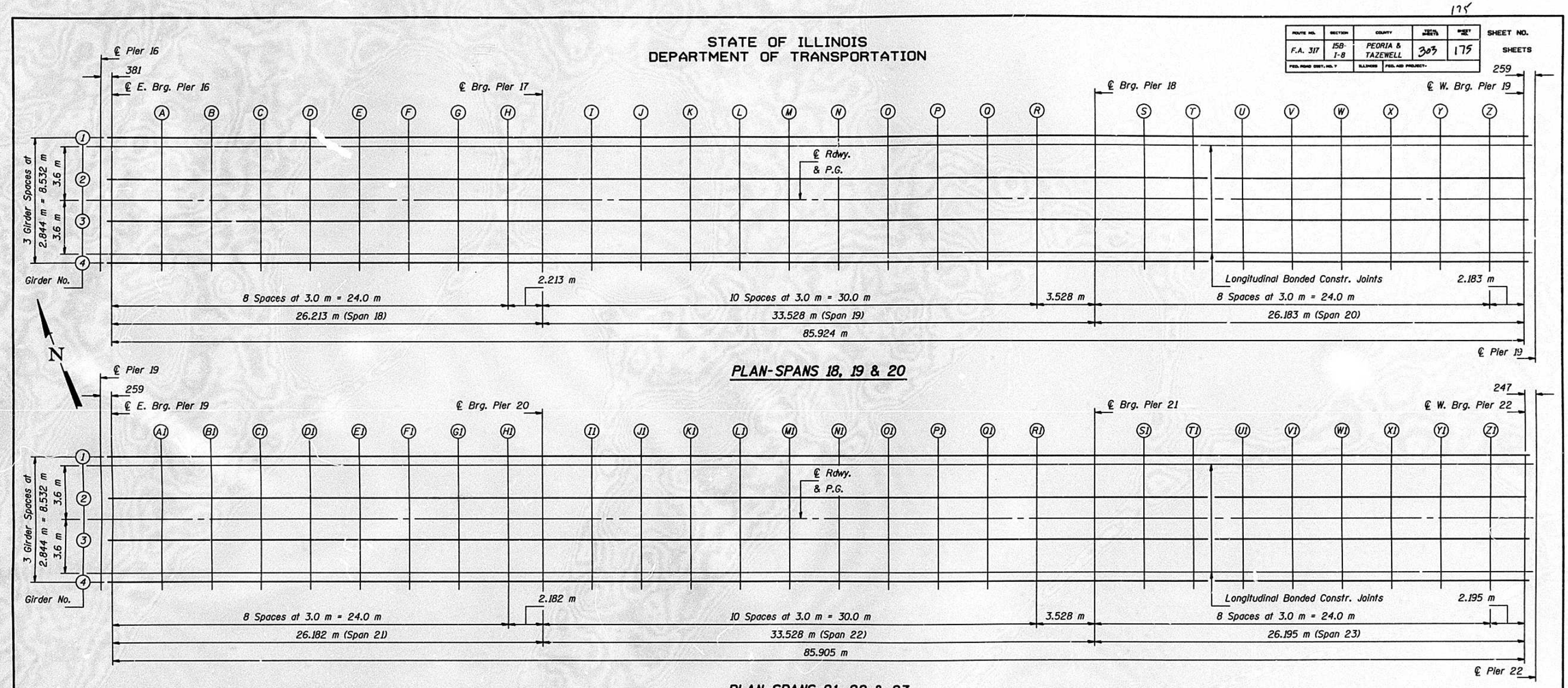

PLAN-SPANS 18, 19 & 20

PLAN-SPANS 21, 22 & 23

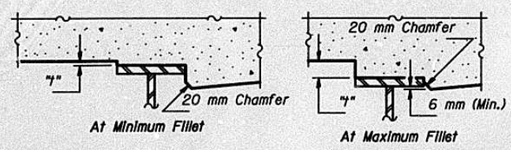

To determine "t": After all structural steel has been erected, elevations of the top flanges of the girders shall be taken at intervals shown above. These elevations subtracted from the "Theoretical Grade Elevations Adjusted for Dead Load Deflections" shown on Drawing E3, minus slab thickness, equals the fillet heights "t" above top flange of girders.

FILLET HEIGHTS

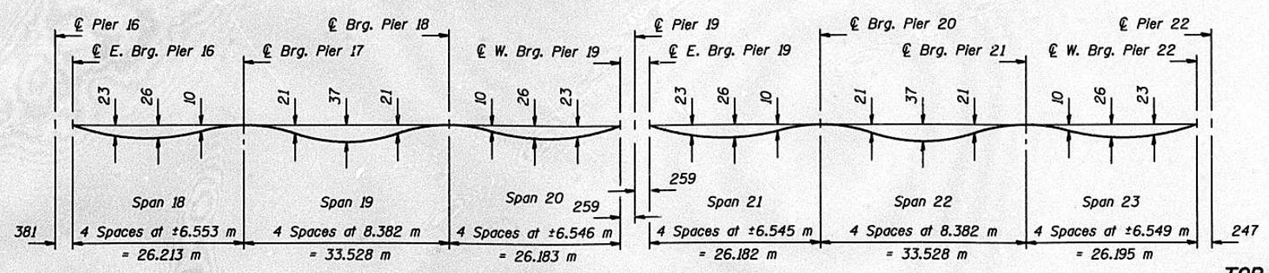

DEAD LOAD DEFLECTION DIAGRAM

(Includes weight of concrete only)

Note: The above deflections are not to be used in the field if the engineer is working from the grade elevations adjusted for dead load deflections as shown on Drawing E3. Work with Drawing E3.

TOP OF SLAB ELEVATIONS
SPANS 18 THRU 23
F.A. ROUTE 317 SECTION 15B-I-8
PEORIA AND TAZEWELL COUNTIES
STATION 6+791.262

DESIGNED	S.Moynihan
CHECKED	P. Petrone
DRAWN	John F. Schneller Jr.
CHECKED	S.E.M. P.M.P. S.D.G.

March 10, 1999

EXAMINED Jaj J. Kaspar ENGINEER OF BRIDGE DESIGN

PASSED Ralph E. Anderson ENGINEER OF BRIDGES AND STRUCTURES

DWG. NO. E2

STATE OF ILLINOIS
DEPARTMENT OF TRANSPORTATION

ROUTE NO.	SECTION	COUNTY	TOTAL SHEETS	SHEET NO.
F.A. 317	15B-1-8	PEORIA & TAZEWELL	303	176
FED. ROAD DIST. NO. 7	ILLINOIS	FED. AID PROJECT-		

SHEET NO.
SHEETS

GIRDERS 1 & 4

Location	Station	Offset	Theoretical Grade Elevations	Theoretical Grade Elevations Adjusted For Dead Load Deflection
℄ Pier 16	7175.591	4.266	149.355	149.355
℄ E. Brg Pier 16	7175.972	4.266	149.347	149.347
A	7178.972	4.266	149.286	149.296
B	7181.972	4.266	149.224	149.245
C	7184.972	4.266	149.163	149.187
D	7187.972	4.266	149.101	149.127
E	7190.972	4.266	149.040	149.062
F	7193.972	4.266	148.979	148.993
G	7196.972	4.266	148.917	148.925
H	7199.972	4.266	148.856	148.859
℄ Brg Pier 17	7202.185	4.266	148.811	148.811
I	7205.185	4.266	148.749	148.757
J	7208.185	4.266	148.688	148.703
K	7211.185	4.266	148.627	148.649
L	7214.185	4.266	148.565	148.593
M	7217.185	4.266	148.504	148.538
N	7220.185	4.266	148.443	148.477
O	7223.185	4.266	148.381	148.410
P	7226.185	4.266	148.320	148.343
Q	7229.185	4.266	148.259	148.275
R	7232.185	4.266	148.197	148.206
℄ Brg Pier 18	7235.713	4.266	148.125	148.125
S	7238.713	4.266	148.064	148.068
T	7241.713	4.266	148.002	148.012
U	7244.713	4.266	147.941	147.957
V	7247.713	4.266	147.880	147.903
W	7250.713	4.266	147.818	147.844
X	7253.713	4.266	147.757	147.781
Y	7256.713	4.266	147.696	147.714
Z	7259.713	4.266	147.634	147.642
℄ W. Brg Pier 19	7261.896	4.266	147.590	147.590
℄ Pier 19	7262.155	4.266	147.584	147.584
℄ E. Brg Pier 19	7262.414	4.266	147.579	147.579
A1	7265.414	4.266	147.518	147.528
B1	7268.414	4.266	147.456	147.478
C1	7271.414	4.266	147.395	147.419
D1	7274.414	4.266	147.334	147.359
E1	7277.414	4.266	147.272	147.294
F1	7280.414	4.266	147.211	147.225
G1	7283.414	4.266	147.150	147.158
H1	7286.414	4.266	147.088	147.092
℄ Brg Pier 20	7288.596	4.266	147.044	147.044
I1	7291.596	4.266	146.982	146.990
J1	7294.596	4.266	146.921	146.936
K1	7297.596	4.266	146.860	146.882
L1	7300.596	4.266	146.798	146.826
M1	7303.596	4.266	146.737	146.771
N1	7306.596	4.266	146.676	146.710
O1	7309.596	4.266	146.614	146.643
P1	7312.596	4.266	146.553	146.576
Q1	7315.596	4.266	146.492	146.508
R1	7318.596	4.266	146.430	146.439
℄ Brg Pier 21	7322.124	4.266	146.358	146.358
S1	7325.124	4.266	146.297	146.301
T1	7328.124	4.266	146.235	146.245
U1	7331.124	4.266	146.174	146.190
V1	7334.124	4.266	146.113	146.136
W1	7337.124	4.266	146.051	146.076
X1	7340.124	4.266	145.990	146.014
Y1	7343.124	4.266	145.929	145.947
Z1	7346.124	4.266	145.867	145.875
℄ W. Brg Pier 22	7348.319	4.266	145.822	145.822
℄ Pier 22	7348.566	4.266	145.817	145.817

LONGITUDINAL BONDED CONSTR. JOINTS

Location	Station	Offset	Theoretical Grade Elevations	Theoretical Grade Elevations Adjusted For Dead Load Deflection
℄ Pier 16	7175.591	3.600	149.368	149.368
℄ E. Brg Pier 16	7175.972	3.600	149.360	149.360
A	7178.972	3.600	149.299	149.309
B	7181.972	3.600	149.238	149.259
C	7184.972	3.600	149.176	149.200
D	7187.972	3.600	149.115	149.140
E	7190.972	3.600	149.053	149.075
F	7193.972	3.600	148.992	149.006
G	7196.972	3.600	148.931	148.939
H	7199.972	3.600	148.869	148.873
℄ Brg Pier 17	7202.185	3.600	148.824	148.824
I	7205.185	3.600	148.763	148.770
J	7208.185	3.600	148.701	148.716
K	7211.185	3.600	148.640	148.662
L	7214.185	3.600	148.379	148.607
M	7217.185	3.600	148.517	148.551
N	7220.185	3.600	148.456	148.491
O	7223.185	3.600	148.395	148.424
P	7226.185	3.600	148.333	148.357
Q	7229.185	3.600	148.272	148.288
R	7232.185	3.600	148.211	148.219
℄ Brg Pier 18	7235.713	3.600	148.139	148.139
S	7238.713	3.600	148.077	148.082
T	7241.713	3.600	148.016	148.025
U	7244.713	3.600	147.954	147.970
V	7247.713	3.600	147.893	147.916
W	7250.713	3.600	147.832	147.857
X	7253.713	3.600	147.770	147.794
Y	7256.713	3.600	147.709	147.727
Z	7259.713	3.600	147.648	147.655
℄ W. Brg Pier 19	7261.896	3.600	147.603	147.603
℄ Pier 19	7262.155	3.600	147.598	147.598
℄ E. Brg Pier 19	7262.414	3.600	147.592	147.592
A1	7265.414	3.600	147.531	147.542
B1	7268.414	3.600	147.470	147.491
C1	7271.414	3.600	147.408	147.433
D1	7274.414	3.600	147.347	147.373
E1	7277.414	3.600	147.286	147.307
F1	7280.414	3.600	147.224	147.238
G1	7283.414	3.600	147.163	147.171
H1	7286.414	3.600	147.102	147.105
℄ Brg Pier 20	7288.596	3.600	147.057	147.057
I1	7291.596	3.600	146.996	147.003
J1	7294.596	3.600	146.934	146.949
K1	7297.596	3.600	146.873	146.895
L1	7300.596	3.600	146.812	146.840
M1	7303.596	3.600	146.750	146.784
N1	7306.596	3.600	146.689	146.724
O1	7309.596	3.600	146.628	146.657
P1	7312.596	3.600	146.566	146.589
Q1	7315.596	3.600	146.505	146.521
R1	7318.596	3.600	146.444	146.452
℄ Brg Pier 21	7322.124	3.600	146.371	146.371
S1	7325.124	3.600	146.310	146.315
T1	7328.124	3.600	146.249	146.258
U1	7331.124	3.600	146.187	146.203
V1	7334.124	3.600	146.126	146.149
W1	7337.124	3.600	146.065	146.090
X1	7340.124	3.600	146.003	146.027
Y1	7343.124	3.600	145.942	145.960
Z1	7346.124	3.600	145.881	145.888
℄ W. Brg Pier 22	7348.319	3.600	145.836	145.836
℄ Pier 22	7348.566	3.600	145.831	145.831

GIRDERS 2 & 3

Location	Station	Offset	Theoretical Grade Elevations	Theoretical Grade Elevations Adjusted For Dead Load Deflection
℄ Pier 16	7175.591	1.422	149.401	149.401
℄ E. Brg Pier 16	7175.972	1.422	149.393	149.393
A	7178.972	1.422	149.332	149.342
B	7181.972	1.422	149.270	149.291
C	7184.972	1.422	149.209	149.233
D	7187.972	1.422	149.147	149.173
E	7190.972	1.422	149.086	149.108
F	7193.972	1.422	149.025	149.039
G	7196.972	1.422	148.963	148.971
H	7199.972	1.422	148.902	148.905
℄ Brg Pier 17	7202.185	1.422	148.857	148.857
I	7205.185	1.422	148.795	148.803
J	7208.185	1.422	148.734	148.749
K	7211.185	1.422	148.673	148.695
L	7214.185	1.422	148.611	148.639
M	7217.185	1.422	148.550	148.584
N	7220.185	1.422	148.489	148.523
O	7223.185	1.422	148.427	148.456
P	7226.185	1.422	148.366	148.389
Q	7229.185	1.422	148.305	148.321
R	7232.185	1.422	148.243	148.252
℄ Brg Pier 18	7235.713	1.422	148.171	148.171
S	7238.713	1.422	148.110	148.114
T	7241.713	1.422	148.048	148.058
U	7244.713	1.422	147.987	148.003
V	7247.713	1.422	147.926	147.949
W	7250.713	1.422	147.864	147.890
X	7253.713	1.422	147.803	147.827
Y	7256.713	1.422	147.742	147.760
Z	7259.713	1.422	147.680	147.688
℄ W. Brg Pier 19	7261.896	1.422	147.636	147.636
℄ Pier 19	7262.155	1.422	147.630	147.630
℄ E. Brg Pier 19	7262.414	1.422	147.625	147.625
A1	7265.414	1.422	147.564	147.574
B1	7268.414	1.422	147.502	147.524
C1	7271.414	1.422	147.441	147.465
D1	7274.414	1.422	147.380	147.405
E1	7277.414	1.422	147.318	147.340
F1	7280.414	1.422	147.257	147.271
G1	7283.414	1.422	147.196	147.204
H1	7286.414	1.422	147.134	147.138
℄ Brg Pier 20	7288.596	1.422	147.090	147.090
I1	7291.596	1.422	147.028	147.036
J1	7294.596	1.422	146.967	146.982
K1	7297.596	1.422	146.906	146.928
L1	7300.596	1.422	146.844	146.872
M1	7303.596	1.422	146.783	146.817
N1	7306.596	1.422	146.722	146.756
O1	7309.596	1.422	146.660	146.689
P1	7312.596	1.422	146.599	146.622
Q1	7315.596	1.422	146.538	146.554
R1	7318.596	1.422	146.476	146.485
℄ Brg Pier 21	7322.124	1.422	146.404	146.404
S1	7325.124	1.422	146.343	146.347
T1	7328.124	1.422	146.281	146.291
U1	7331.124	1.422	146.220	146.236
V1	7334.124	1.422	146.159	146.182
W1	7337.124	1.422	146.097	146.122
X1	7340.124	1.422	146.036	146.060
Y1	7343.124	1.422	145.975	145.993
Z1	7346.124	1.422	145.913	145.921
℄ W. Brg Pier 22	7348.319	1.422	145.868	145.868
℄ Pier 22	7348.566	1.422	145.863	145.863

℄ ROADWAY & P.G.

Location	Station	Offset	Theoretical Grade Elevations	Theoretical Grade Elevations Adjusted For Dead Load Deflection
℄ Pier 16	7175.591	.000	149.422	149.422
℄ E. Brg Pier 16	7175.972	.000	149.414	149.414
A	7178.972	.000	149.353	149.363
B	7181.972	.000	149.292	149.313
C	7184.972	.000	149.230	149.254
D	7187.972	.000	149.169	149.194
E	7190.972	.000	149.107	149.129
F	7193.972	.000	149.046	149.060
G	7196.972	.000	148.985	148.993
H	7199.972	.000	148.923	148.927
℄ Brg Pier 17	7202.185	.000	148.878	148.878
I	7205.185	.000	148.817	148.824
J	7208.185	.000	148.755	148.770
K	7211.185	.000	148.694	148.716
L	7214.185	.000	148.633	148.661
M	7217.185	.000	148.571	148.605
N	7220.185	.000	148.510	148.545
O	7223.185	.000	148.449	148.478
P	7226.185	.000	148.387	148.411
Q	7229.185	.000	148.326	148.342
R	7232.185	.000	148.265	148.273
℄ Brg Pier 18	7235.713	.000	148.193	148.193
S	7238.713	.000	148.131	148.136
T	7241.713	.000	148.070	148.079
U	7244.713	.000	148.008	148.024
V	7247.713	.000	147.947	147.970
W	7250.713	.000	147.886	147.911
X	7253.713	.000	147.824	147.848
Y	7256.713	.000	147.763	147.781
Z	7259.713	.000	147.702	147.709
℄ W. Brg Pier 19	7261.896	.000	147.657	147.657
℄ Pier 19	7262.155	.000	147.652	147.652
℄ E. Brg Pier 19	7262.414	.000	147.646	147.646
A1	7265.414	.000	147.585	147.596
B1	7268.414	.000	147.524	147.545
C1	7271.414	.000	147.462	147.487
D1	7274.414	.000	147.401	147.427
E1	7277.414	.000	147.340	147.361
F1	7280.414	.000	147.278	147.292
G1	7283.414	.000	147.217	147.225
H1	7286.414	.000	147.156	147.159
℄ Brg Pier 20	7288.596	.000	147.111	147.111
I1	7291.596	.000	147.050	147.057
J1	7294.596	.000	146.988	147.003
K1	7297.596	.000	146.927	146.949
L1	7300.596	.000	146.866	146.894
M1	7303.596	.000	146.804	146.838
N1	7306.596	.000	146.743	146.778
O1	7309.596	.000	146.682	146.711
P1	7312.596	.000	146.620	146.643
Q1	7315.596	.000	146.559	146.575
R1	7318.596	.000	146.498	146.506
℄ Brg Pier 21	7322.124	.000	146.425	146.425
S1	7325.124	.000	146.364	146.369
T1	7328.124	.000	146.303	146.312
U1	7331.124	.000	146.241	146.257
V1	7334.124	.000	146.180	146.203
W1	7337.124	.000	146.119	146.144
X1	7340.124	.000	146.057	146.081
Y1	7343.124	.000	145.996	146.014
Z1	7346.124	.000	145.935	145.942
℄ W. Brg Pier 22	7348.319	.000	145.890	145.890
℄ Pier 22	7348.566	.000	145.885	145.885

Notes: All elevations and offsets are in meters.
Work with Drawing E2.

DESIGNED	P. Petrone
CHECKED	S.D. Gnann
DRAWN	John F. Schneller Jr.
CHECKED	P.M.P. S.D.G. S.E.M.

March 10, 1999
EXAMINED Raj. D. Kaspar ENGINEER OF BRIDGE DESIGN
PASSED Ralph E. Anderson ENGINEER OF BRIDGES AND STRUCTURES

E-S (M) 7-1-94

TOP OF SLAB ELEVATIONS
SPANS 18 THRU 23
F.A. ROUTE 317 SECTION 15B-I-8
PEORIA AND TAZEWELL COUNTIES
STATION 6+791.262

DWG. NO. E3

TAMERAN

STATE OF ILLINOIS
DEPARTMENT OF TRANSPORTATION

ROUTE NO.	SECTION	COUNTY	TOTAL SHEETS	SHEET NO.
F.A. 317	15B-I-8	PEORIA & TAZEWELL	303	177
FED. ROAD DIST. NO. 7	ILLINOIS	FED. AID PROJECT-		

SHEET NO.
SHEETS

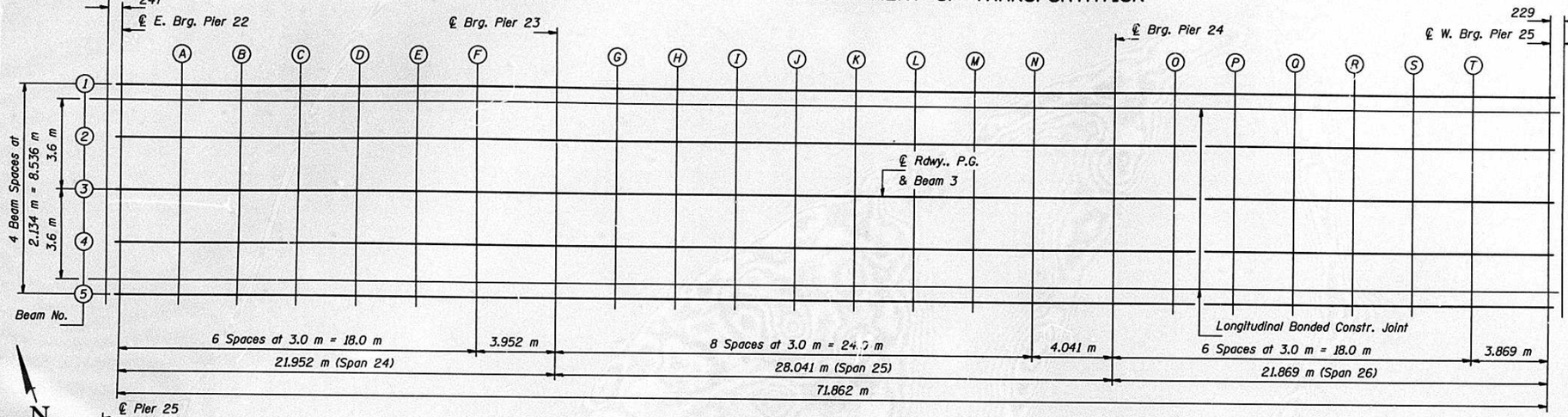

Note: Work with Drawing E5.

PLAN-SPANS 24, 25 & 26

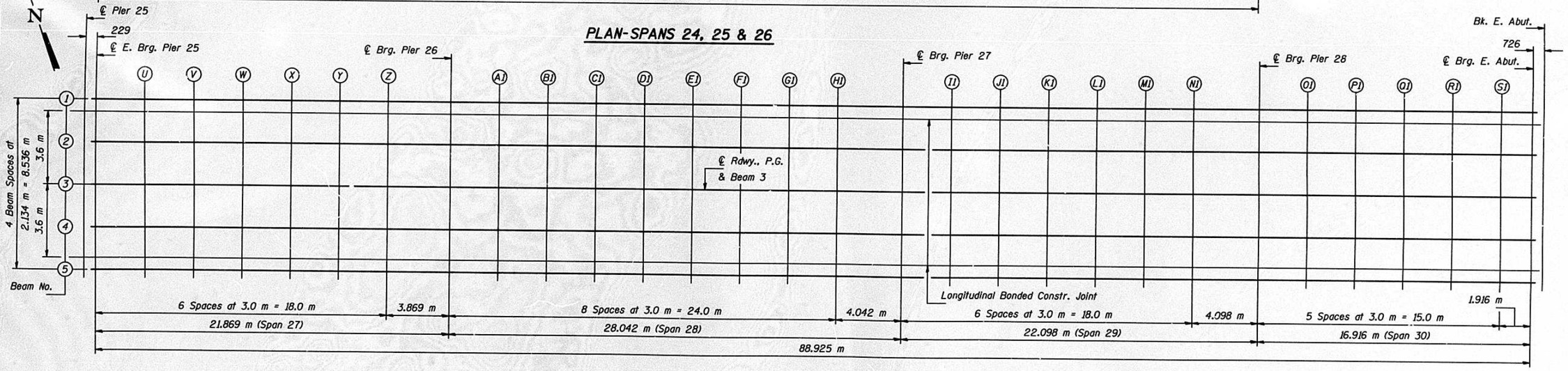

PLAN-SPANS 27, 28, 29 & 30

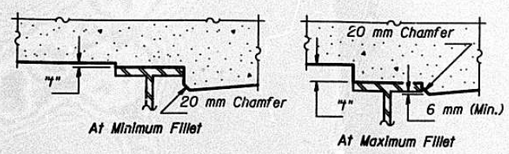

To determine "Y": After all structural steel has been erected, elevations of the top flanges of the beams shall be taken at intervals shown above. These elevations subtracted from the "Theoretical Grade Elevations Adjusted for Dead Load Deflections" shown on Drawing E5, minus slab thickness, equals the fillet heights "Y" above top flange of beams.

FILLET HEIGHTS

DESIGNED	S. Moynihan
CHECKED	P. Petrone
DRAWN	John F. Schneller Jr.
CHECKED	S.E.M. P.M.P. S.D.G.

March 10, 1999

EXAMINED Raj D. Kaspar
ENGINEER OF BRIDGE DESIGN

PASSED Ralph E. Anderson
ENGINEER OF BRIDGES AND STRUCTURES

TOP OF SLAB ELEVATIONS
SPANS 24 THRU 30
F.A. ROUTE 317 SECTION 15B-I-8
PEORIA AND TAZEWELL COUNTIES
STATION 6+791.262

DWG. NO. E4

STATE OF ILLINOIS
DEPARTMENT OF TRANSPORTATION

ROUTE NO.	SECTION	COUNTY	TOTAL SHEETS	SHEET NO.
F.A. 317	15B-1-8	PEORIA & TAZEWELL	303	178
FED. ROAD DIST. NO. 7	ILLINOIS	FED. AID PROJECT-		

SHEET NO.
SHEETS

BEAMS 1 & 5

Location	Station	Offset	Theoretical Grade Elevations	Theoretical Grade Elevations Adjusted For Dead Load Deflection
℄ Pier 22	7348.566	4.268	145.818	145.818
℄ E. Brg Pier 22	7348.813	4.268	145.813	145.813
A	7351.813	4.268	145.751	145.759
B	7354.813	4.268	145.690	145.704
C	7357.813	4.268	145.629	145.644
D	7360.813	4.268	145.567	145.582
E	7363.813	4.268	145.506	145.516
F	7366.813	4.268	145.444	145.450
℄ Brg Pier 23	7370.765	4.268	145.364	145.364
G	7373.765	4.268	145.302	145.309
H	7376.765	4.268	145.241	145.255
I	7379.765	4.268	145.180	145.199
J	7382.765	4.268	145.118	145.143
K	7385.765	4.268	145.057	145.083
L	7388.765	4.268	144.996	145.017
M	7391.765	4.268	144.934	144.950
N	7394.765	4.268	144.873	144.882
℄ Brg Pier 24	7398.806	4.268	144.790	144.790
O	7401.806	4.268	144.729	144.733
P	7404.806	4.268	144.668	144.675
Q	7407.806	4.268	144.606	144.619
R	7410.806	4.268	144.545	144.560
S	7413.806	4.268	144.483	144.498
T	7416.806	4.268	144.422	144.432
℄ W. Brg Pier 25	7420.675	4.268	144.343	144.343
℄ Pier 25	7420.904	4.268	144.338	144.338
℄ E. Brg Pier 25	7421.133	4.268	144.334	144.334
U	7424.133	4.268	144.272	144.279
V	7427.133	4.268	144.211	144.224
W	7430.133	4.268	144.150	144.164
X	7433.133	4.268	144.088	144.101
Y	7436.133	4.268	144.027	144.035
Z	7439.133	4.268	143.966	143.970
℄ Brg Pier 26	7443.002	4.268	143.886	143.886
A1	7446.002	4.268	143.825	143.833
B1	7449.002	4.268	143.764	143.779
C1	7452.002	4.268	143.702	143.724
D1	7455.002	4.268	143.641	143.668
E1	7458.002	4.268	143.580	143.609
F1	7461.002	4.268	143.518	143.543
G1	7464.002	4.268	143.457	143.477
H1	7467.002	4.268	143.396	143.407
℄ Brg Pier 27	7471.044	4.268	143.313	143.313
I1	7474.044	4.268	143.252	143.252
J1	7477.044	4.268	143.190	143.192
K1	7480.044	4.268	143.129	143.133
L1	7483.044	4.268	143.068	143.073
M1	7486.044	4.268	143.006	143.011
N1	7489.044	4.268	142.945	142.948
℄ Brg Pier 28	7493.142	4.268	142.861	142.861
O1	7496.142	4.268	142.800	142.802
P1	7499.142	4.268	142.738	142.743
Q1	7502.142	4.268	142.677	142.684
R1	7505.142	4.268	142.616	142.622
S1	7508.142	4.268	142.554	142.557
℄ Brg E. Abut.	7510.058	4.268	142.515	142.515
Bk. E. Abut.	7510.820	4.268	142.500	142.500

LONGITUDINAL BONDED CONSTR. JOINTS

Location	Station	Offset	Theoretical Grade Elevations	Theoretical Grade Elevations Adjusted For Dead Load Deflection
℄ Pier 22	7348.566	3.600	145.831	145.831
℄ E. Brg Pier 22	7348.813	3.600	145.826	145.826
A	7351.813	3.600	145.765	145.772
B	7354.813	3.600	145.703	145.718
C	7357.813	3.600	145.642	145.658
D	7360.813	3.600	145.581	145.596
E	7363.813	3.600	145.519	145.529
F	7366.813	3.600	145.458	145.463
℄ Brg Pier 23	7370.765	3.600	145.377	145.377
G	7373.765	3.600	145.316	145.323
H	7376.765	3.600	145.254	145.268
I	7379.765	3.600	145.193	145.212
J	7382.765	3.600	145.132	145.156
K	7385.765	3.600	145.070	145.097
L	7388.765	3.600	145.009	145.030
M	7391.765	3.600	144.948	144.964
N	7394.765	3.600	144.886	144.895
℄ Brg Pier 24	7398.806	3.600	144.804	144.804
O	7401.806	3.600	144.742	144.746
P	7404.806	3.600	144.681	144.689
Q	7407.806	3.600	144.620	144.632
R	7410.806	3.600	144.558	144.574
S	7413.806	3.600	144.497	144.511
T	7416.806	3.600	144.435	144.445
℄ W. Brg Pier 25	7420.675	3.600	144.356	144.356
℄ Pier 25	7420.904	3.600	144.352	144.352
℄ E. Brg Pier 25	7421.133	3.600	144.347	144.347
U	7424.133	3.600	144.286	144.293
V	7427.133	3.600	144.224	144.237
W	7430.133	3.600	144.163	144.177
X	7433.133	3.600	144.102	144.115
Y	7436.133	3.600	144.040	144.049
Z	7439.133	3.600	143.979	143.9[illegible]
℄ Brg Pier 26	7443.002	3.600	143.900	143.900
A1	7446.002	3.600	143.838	143.846
B1	7449.002	3.600	143.777	143.792
C1	7452.002	3.600	143.716	143.737
D1	7455.002	3.600	143.654	143.682
E1	7458.002	3.600	143.593	143.622
F1	7461.002	3.600	143.532	143.556
G1	7464.002	3.600	143.470	143.490
H1	7467.002	3.600	143.409	143.421
℄ Brg Pier 27	7471.044	3.600	143.326	143.326
I1	7474.044	3.600	143.265	143.266
J1	7477.044	3.600	143.204	143.205
K1	7480.044	3.600	143.142	143.146
L1	7483.044	3.600	143.081	143.087
M1	7486.044	3.600	143.020	143.024
N1	7489.044	3.600	142.958	142.961
℄ Brg Pier 28	7493.142	3.600	142.874	142.874
O1	7496.142	3.600	142.813	142.815
P1	7499.142	3.600	142.752	142.756
Q1	7502.142	3.600	142.690	142.697
R1	7505.142	3.600	142.629	142.635
S1	7508.142	3.600	142.568	142.570
℄ Brg E. Abut.	7510.058	3.600	142.528	142.528
Bk. E. Abut.	7510.820	3.600	142.513	142.513

BEAMS 2 & 4

Location	Station	Offset	Theoretical Grade Elevations	Theoretical Grade Elevations Adjusted For Dead Load Deflection
℄ Pier 22	7348.566	2.134	145.853	145.853
℄ E. Brg Pier 22	7348.813	2.134	145.848	145.848
A	7351.813	2.134	145.787	145.794
B	7354.813	2.134	145.725	145.740
C	7357.813	2.134	145.664	145.680
D	7360.813	2.134	145.603	145.618
E	7363.813	2.134	145.541	145.551
F	7366.813	2.134	145.480	145.485
℄ Brg Pier 23	7370.765	2.134	145.399	145.399
G	7373.765	2.134	145.338	145.345
H	7376.765	2.134	145.276	145.290
I	7379.765	2.134	145.215	145.234
J	7382.765	2.134	145.154	145.178
K	7385.765	2.134	145.092	145.119
L	7388.765	2.134	145.031	145.052
M	7391.765	2.134	144.970	144.986
N	7394.765	2.134	144.908	144.917
℄ Brg Pier 24	7398.806	2.134	144.826	144.826
O	7401.806	2.134	144.764	144.768
P	7404.806	2.134	144.703	144.711
Q	7407.806	2.134	144.642	144.654
R	7410.806	2.134	144.580	144.596
S	7413.806	2.134	144.519	144.533
T	7416.806	2.134	144.457	144.467
℄ W. Brg Pier 25	7420.675	2.134	144.378	144.378
℄ Pier 25	7420.904	2.134	144.374	144.374
℄ E. Brg Pier 25	7421.133	2.134	144.369	144.369
U	7424.133	2.134	144.308	144.315
V	7427.133	2.134	144.246	144.259
W	7430.133	2.134	144.185	144.199
X	7433.133	2.134	144.124	144.137
Y	7436.133	2.134	144.062	144.071
Z	7439.133	2.134	144.001	144.005
℄ Brg Pier 26	7443.002	2.134	143.922	143.922
A1	7446.002	2.134	143.860	143.868
B1	7449.002	2.134	143.799	143.814
C1	7452.002	2.134	143.738	143.759
D1	7455.002	2.134	143.676	143.704
E1	7458.002	2.134	143.615	143.644
F1	7461.002	2.134	143.554	143.578
G1	7464.002	2.134	143.492	143.512
H1	7467.002	2.134	143.431	143.443
℄ Brg Pier 27	7471.044	2.134	143.348	143.348
I1	7474.044	2.134	143.287	143.288
J1	7477.044	2.134	143.226	143.227
K1	7480.044	2.134	143.164	143.168
L1	7483.044	2.134	143.103	143.109
M1	7486.044	2.134	143.042	143.046
N1	7489.044	2.134	142.980	142.983
℄ Brg Pier 28	7493.142	2.134	142.896	142.896
O1	7496.142	2.134	142.835	142.837
P1	7499.142	2.134	142.774	142.778
Q1	7502.142	2.134	142.712	142.719
R1	7505.142	2.134	142.651	142.657
S1	7508.142	2.134	142.590	142.592
℄ Brg E. Abut.	7510.058	2.134	142.550	142.550
Bk. E. Abut.	7510.820	2.134	142.535	142.535

BEAM 3, ℄ ROADWAY & P.G.

Location	Station	Offset	Theoretical Grade Elevations	Theoretical Grade Elevations Adjusted For Dead Load Deflection
℄ Pier 22	7348.566	.000	145.885	145.885
℄ E. Brg Pier 22	7348.813	.000	145.880	145.880
A	7351.813	.000	145.819	145.826
B	7354.813	.000	145.757	145.772
C	7357.813	.000	145.696	145.712
D	7360.813	.000	145.635	145.650
E	7363.813	.000	145.573	145.583
F	7366.813	.000	145.512	145.517
℄ Brg Pier 23	7370.765	.000	145.431	145.431
G	7373.765	.000	145.370	145.377
H	7376.765	.000	145.308	145.322
I	7379.765	.000	145.247	145.266
J	7382.765	.000	145.186	145.210
K	7385.765	.000	145.124	145.151
L	7388.765	.000	145.063	145.084
M	7391.765	.000	145.002	145.018
N	7394.765	.000	144.940	144.949
℄ Brg Pier 24	7398.806	.000	144.858	144.858
O	7401.806	.000	144.796	144.800
P	7404.806	.000	144.735	144.743
Q	7407.806	.000	144.674	144.686
R	7410.806	.000	144.612	144.628
S	7413.806	.000	144.551	144.565
T	7416.806	.000	144.489	144.499
℄ W. Brg Pier 25	7420.675	.000	144.410	144.410
℄ Pier 25	7420.904	.000	144.406	144.406
℄ E. Brg Pier 25	7421.133	.000	144.401	144.401
U	7424.133	.000	144.340	144.347
V	7427.133	.000	144.278	144.291
W	7430.133	.000	144.217	144.231
X	7433.133	.000	144.156	144.169
Y	7436.133	.000	144.094	144.103
Z	7439.133	.000	144.033	144.037
℄ Brg Pier 26	7443.002	.000	143.954	143.954
A1	7446.002	.000	143.892	143.900
B1	7449.002	.000	143.831	143.846
C1	7452.002	.000	143.770	143.791
D1	7455.002	.000	143.708	143.736
E1	7458.002	.000	143.647	143.676
F1	7461.002	.000	143.586	143.610
G1	7464.002	.000	143.524	143.544
H1	7467.002	.000	143.463	143.475
℄ Brg Pier 27	7471.044	.000	143.380	143.380
I1	7474.044	.000	143.319	143.320
J1	7477.044	.000	143.258	143.259
K1	7480.044	.000	143.196	143.200
L1	7483.044	.000	143.135	143.141
M1	7486.044	.000	143.074	143.078
N1	7489.044	.000	143.012	143.015
℄ Brg Pier 28	7493.142	.000	142.928	142.928
O1	7496.142	.000	142.867	142.869
P1	7499.142	.000	142.806	142.810
Q1	7502.142	.000	142.744	142.751
R1	7505.142	.000	142.683	142.689
S1	7508.142	.000	142.622	142.624
℄ Brg E. Abut.	7510.058	.000	142.582	142.582
Bk. E. Abut.	7510.820	.000	142.567	142.567

Note: The deflections shown in the diagram are not to be used in the field if the engineer is working from the grade elevations adjusted for dead load deflections as shown above.
All elevations and offsets are in meters.
Work with Drawing E4.

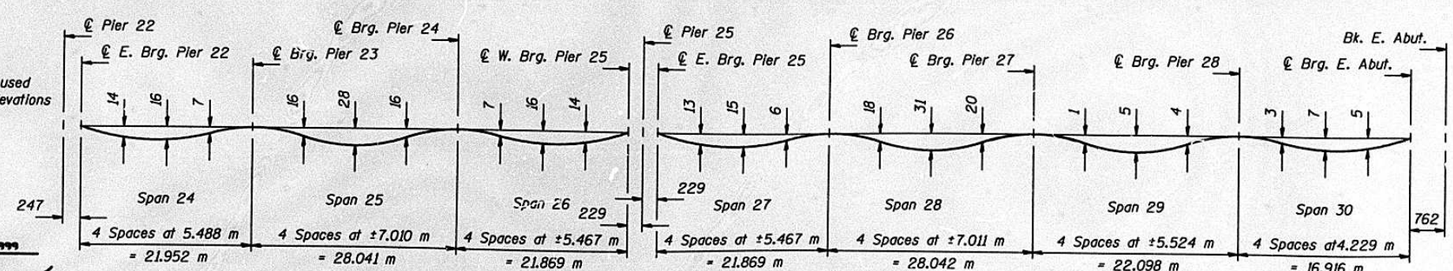

DEAD LOAD DEFLECTION DIAGRAM

(Includes weight of concrete only)

TOP OF SLAB ELEVATIONS SPANS 24 THRU 30

F.A. ROUTE 317 SECTION 15B-1-8

PEORIA AND TAZEWELL COUNTIES

STATION 6+791.262

DESIGNED	P. Petrone
CHECKED	S.D. Gnann
DRAWN	John F. Schneller Jr.
CHECKED	P.M.P. S.D.G. S.E.M.

March 10, 1999

EXAMINED Greg J. Kasper ENGINEER OF BRIDGE DESIGN

PASSED Ralph E. Anderson ENGINEER OF BRIDGES AND STRUCTURES

E-S (M) 7-1-94

DWG. NO. E5

STATE OF ILLINOIS
DEPARTMENT OF TRANSPORTATION

ROUTE NO.	SECTION	COUNTY	TOTAL SHEETS	SHEET NO.
F.A. 317	15B-1-8	PEORIA & TAZEWELL	303	179
FED. ROAD DIST. NO. 7	ILLINOIS	FED. AID PROJECT-		

SHEET NO.
SHEETS

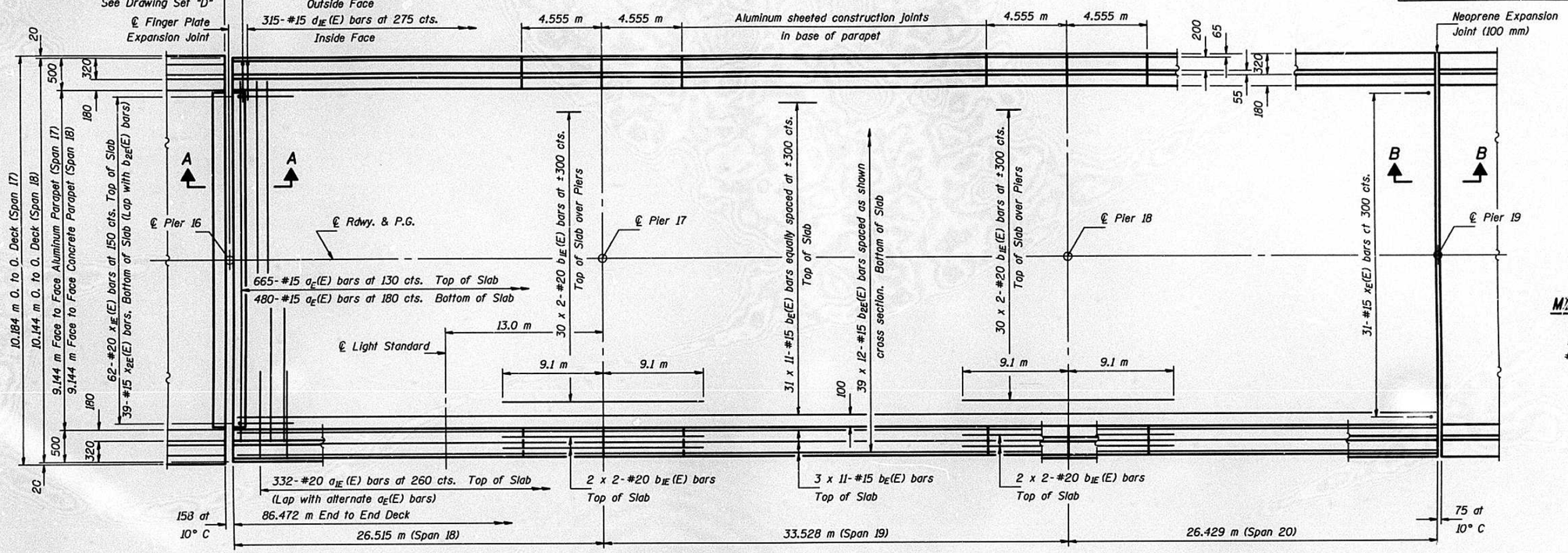

PLAN

MIN. BAR LAP (SLAB)
#15 bars = 510
#20 bars = 640

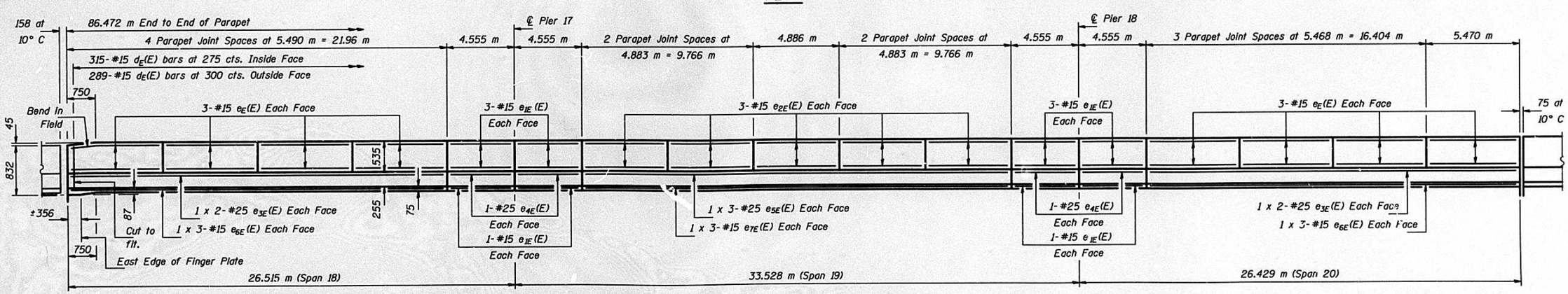

INSIDE ELEVATION OF PARAPET

MIN. BAR LAPS (PARAPET)
#15 bars = 490
#25 bars = 1010

DESIGNED	S. Moynihan
CHECKED	J. Klein
DRAWN	John F. Schneller Jr.
CHECKED	S.E.M. J.K.K. S.D.G.

March 10, 1999
EXAMINED Greg J. Kaspar — ENGINEER OF BRIDGE DESIGN
PASSED Ralph E. Anderson — ENGINEER OF BRIDGES AND STRUCTURES

Notes: See Drawing E8 for Cross Section, Section A-A and Section B-B.
See Drawing E9 for Section thru Parapet, Bar Details and Bill of Material.
Reinforcement bars designated (E) shall be epoxy coated.
Bars indicated thus 20 x 3-#15 etc. indicates 20 lines of bars with 3 lengths per line.
For Light Standard Details, see Drawing E21.
For Scupper locations, see Drawing E25.

SUPERSTRUCTURE
SPANS 18 THRU 20
F.A. ROUTE 317 SECTION 15B-1-8
PEORIA AND TAZEWELL COUNTIES
STATION 6+791.262

DWG. NO. E6

TAMERAN

ROUTE NO.	SECTION	COUNTY	TOTAL SHEETS	SHEET NO.
F.A. 317	15B-1-8	PEORIA & TAZEWELL	303	180
FED. ROAD DIST. NO. 7	ILLINOIS	FED. AID PROJECT-		

SHEET NO.
SHEETS

STATE OF ILLINOIS
DEPARTMENT OF TRANSPORTATION

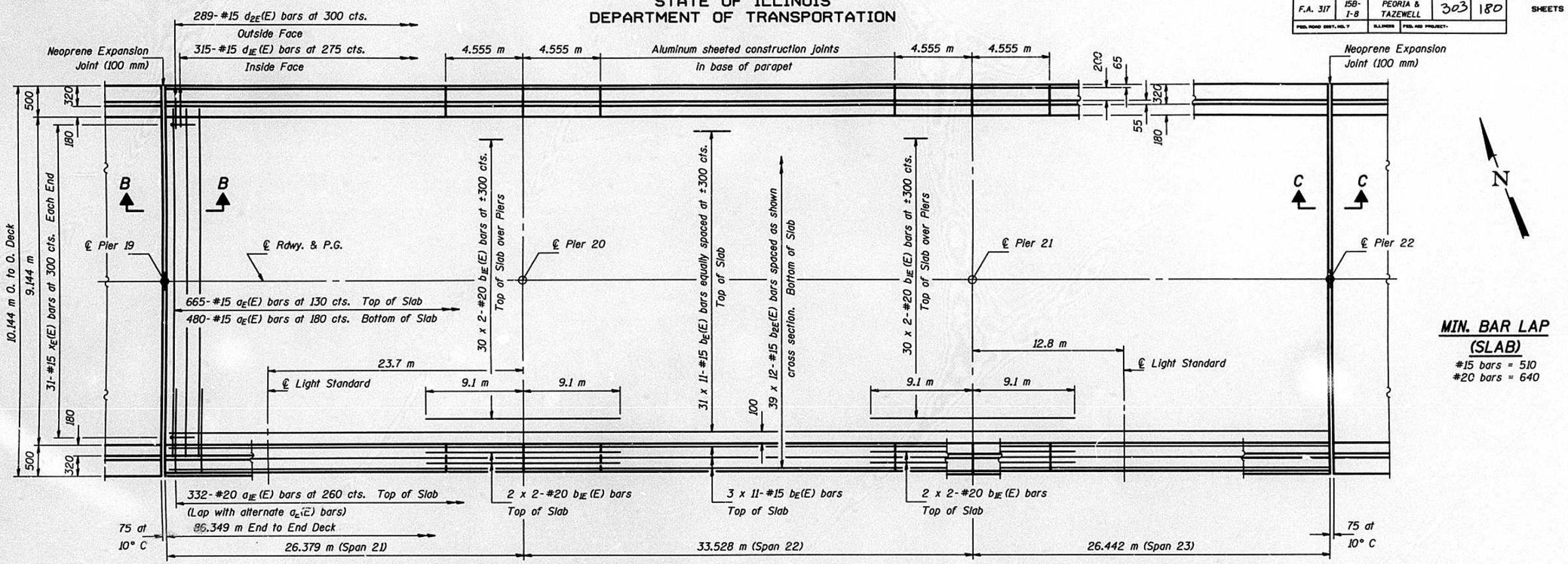

PLAN

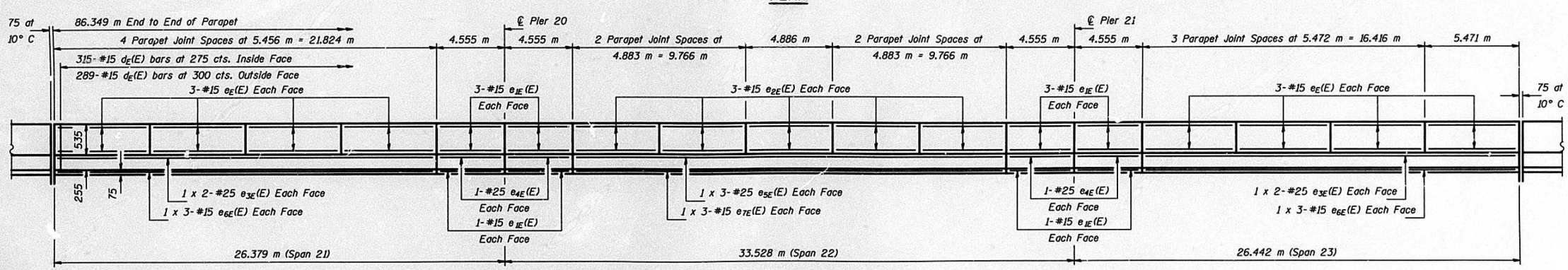

INSIDE ELEVATION OF PARAPET

MIN. BAR LAP (SLAB)

#15 bars = 510
#20 bars = 640

MIN. BAR LAPS (PARAPET)

#15 bars = 490
#25 bars = 1010

Notes: See Drawing E8 for Cross Section, Section B-B and Section C-C.
See Drawing E9 for Section thru Parapet, Bar Details and Bill of Material.
Reinforcement bars designated (E) shall be epoxy coated.
Bars indicated thus 20 x 3-#15 etc. indicates 20 lines of bars with 3 lengths per line.
For Light Standard Details, see Drawing E21.
For Scupper locations, see Drawing E25.

DESIGNED	S. Moynihan
CHECKED	S.D. Gnann
DRAWN	John F. Schneller Jr.
CHECKED	S.E.M. S.D.G. J.K.K.

March 10, 1999
EXAMINED Engineer of Bridge Design
PASSED Engineer of Bridges and Structures

SUPERSTRUCTURE
SPANS 21 THRU 23
F.A. ROUTE 317 SECTION 15B-1-8
PEORIA AND TAZEWELL COUNTIES
STATION 6+791.262

DWG. NO. E7

Note:
Cost of 9 mm Aluminum Bent Sliding Plate and Finger Plate Expansion Joint (including Stools attached to Diaphragm and Angles attached to Plate Girder Web is included with "Furnishing and Erecting Structural Steel" in Set "D".
Cost of 19 mm ϕ Headed Studs and 14 mm Galvanized Steel Plate is included with "Furnishing and Erecting Structural Steel" in this set of Drawings.
The 14 mm Steel Plate shall be galvanized after shop fabrication according to AASHTO M 111 and ASTM A 385. All portions of the 14 mm Galvanized Steel Plate shall receive two coats of asphalt paint conforming to Section 1060.07 of the Standard Specifications.

STATE OF ILLINOIS
DEPARTMENT OF TRANSPORTATION

ROUTE NO.	SECTION	COUNTY	TOTAL SHEETS	SHEET NO.	SHEET NO.
F.A. 317	15B-1-8	PEORIA & TAZEWELL	303	181	SHEETS
FED. ROAD DIST. NO. 7	ILLINOIS	FED. AID PROJECT-			

** Place $a_E(E)$ bars in back of Anchor Bolts as shown if required to maintain 25 mm cl. (+0-3 mm). Anchor bolts should be tied to $a_E(E)$ bars.

Cut or bend reinforcement bars as required to miss Stools by 25 mm.

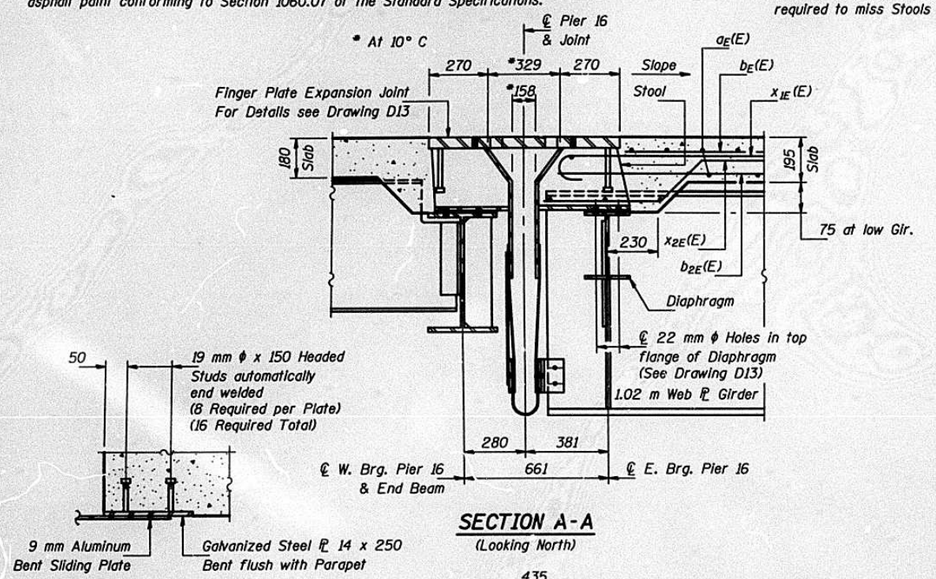

SECTION A-A
(Looking North)

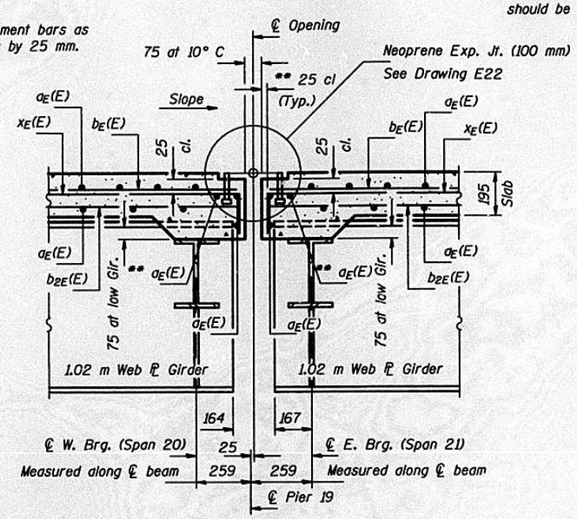

SECTION B-B
(Looking North)

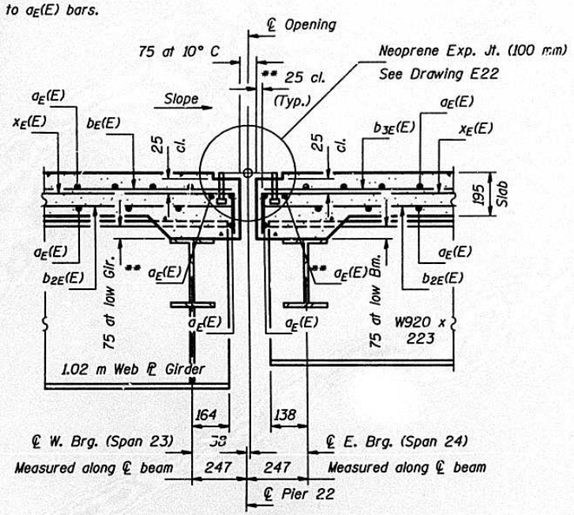

SECTION C-C
(Looking North)

SECTION 1-1

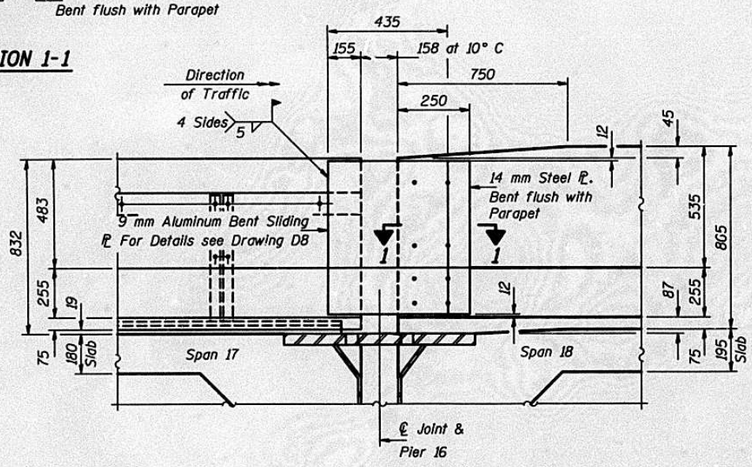

ELEVATION - PARAPET SLIDING PLATE AT PIER 16
(Looking North)

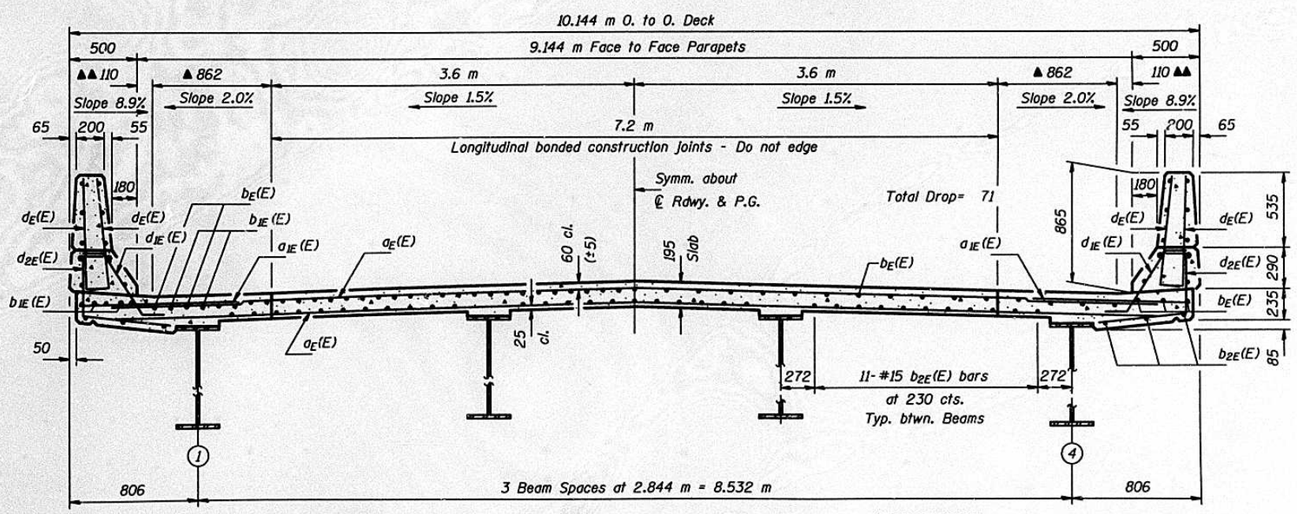

CROSS SECTION
(Looking East)

▲▲ Varies 0 to 110 from ±Sta. 7+176.026 (East edge of Finger Plate) to Sta. 7+176.42.
▲ Varies 972 to 862 from ±Sta. 7+176.026 (East edge of Finger Plate) to Sta. 7+176.42.
Adjust vertical dimensions of Parapet as shown on this Drawing and on Drawing E6.

DESIGNED	S. Moynihan
CHECKED	J. Klein
DRAWN	John F. Schneller Jr.
CHECKED	S.E.M. J.K.K.

March 10, 1999
EXAMINED Engr. of Bridge Design
PASSED Engr. of Bridges and Structures

Notes: Reinforcement bars designated (E) shall be epoxy coated.
Work with Drawings E6, E7 & E9.

SUPERSTRUCTURE DETAILS
SPANS 18 THRU 23
F.A. ROUTE 317 SECTION 15B-1-8
PEORIA AND TAZEWELL COUNTIES
STATION 6+791.262

DWG. NO. E8

ROUTE NO.	SECTION	COUNTY	TOTAL SHEETS	SHEET NO.
F.A. 317	158-1-8	PEORIA & TAZEWELL	303	182
FED. ROAD DIST. NO. 7	ILLINOIS	FED. AID PROJECT-		

SHEET NO.
SHEETS

STATE OF ILLINOIS
DEPARTMENT OF TRANSPORTATION

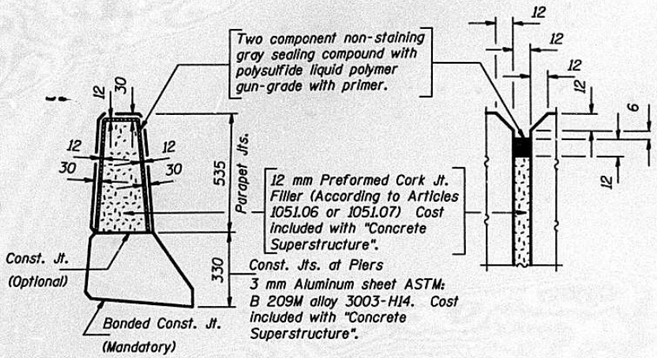

PARAPET JOINT DETAILS

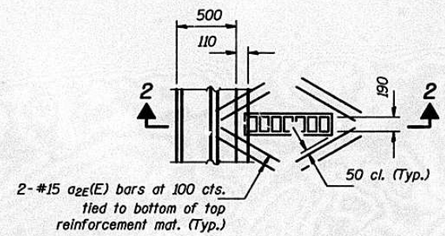

PLAN

Cut longitudinal reinforcement bars to clear scupper.

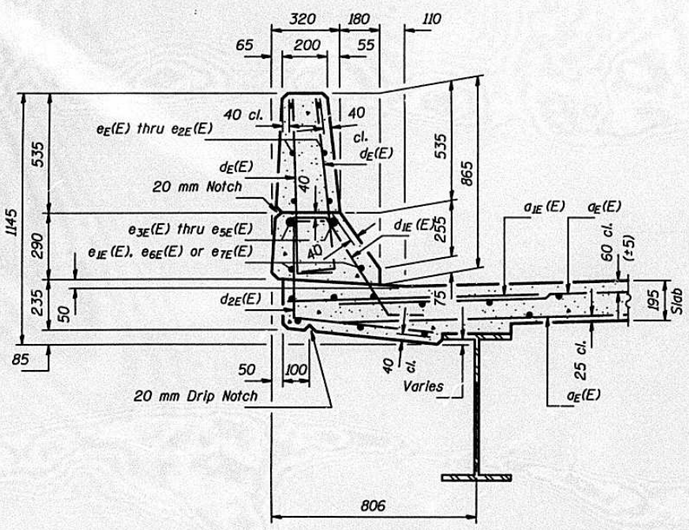

SECTION THRU PARAPET

Typical except between Sta. 7+175.67 and Sta. 7+176.42 as shown on Drawings E6 and E8.

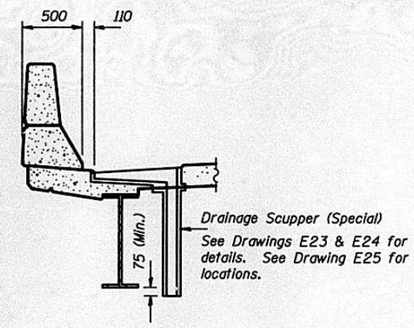

SECTION 2-2

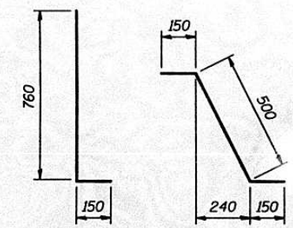

BAR d_E(E) BAR d_{1E}(E)

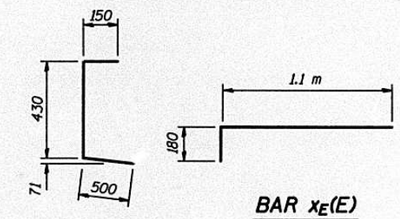

BAR d_{2E}(E) BAR x_E(E)

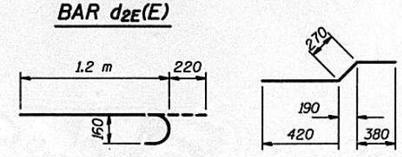

BAR x_{1E}(E) BAR x_{2E}(E)

SUPERSTRUCTURE BILL OF MATERIAL

Bar	No.	Size	Length (m)	Shape
a_E(E)	2290	#15	9.55	
a_{1E}(E)	1328	#20	1.20	
a_{2E}(E)	128	#15	0.60	
b_E(E)	814	#15	8.32	
b_{1E}(E)	272	#20	9.42	
b_{2E}(E)	936	#15	7.68	
d_E(E)	2416	#15	0.91	
d_{1E}(E)	1260	#15	0.80	
d_{2E}(E)	1156	#15	1.08	
d_{3E}(E)	15	#20	2.68	
d_{4E}(E)	9	#20	1.34	
e_E(E)	192	#15	5.39	
e_{1E}(E)	128	#15	4.48	
e_{2E}(E)	120	#15	4.81	
e_{3E}(E)	32	#25	11.45	
e_{4E}(E)	32	#25	4.48	
e_{5E}(E)	24	#25	8.79	
e_{6E}(E)	48	#15	7.64	
e_{7E}(E)	24	#15	8.44	
x_E(E)	93	#15	1.28	
x_{1E}(E)	62	#20	1.42	
x_{2E}(E)	39	#15	1.07	
Reinforcement Bars, Epoxy Coated			kg	80,890
Concrete Superstructure			m^3	449.9

DESIGNED	S. Moynihan
CHECKED	S.D. Gnann
DRAWN	John F. Schneller Jr.
CHECKED	S.E.M. S.D.G. J.K.K.

March 10, 1999
EXAMINED Engineer of Bridge Design
PASSED Engineer of Bridges and Structures

Notes: Reinforcement bars designated (E) shall be epoxy coated.
For details of bars d_{3E}(E) and d_{4E}(E), see Drawing E21.
Work with Drawings E6, E7 & E8.

SUPERSTRUCTURE DETAILS
SPANS 18 THRU 23
F.A. ROUTE 317 SECTION 15B-1-8
PEORIA AND TAZEWELL COUNTIES
STATION 6+791.262

DWG. NO. E9

TAMERAN

STATE OF ILLINOIS
DEPARTMENT OF TRANSPORTATION

ROUTE NO.	SECTION	COUNTY	TOTAL SHEETS	SHEET NO.
F.A. 317	15B-1-8	PEORIA & TAZEWELL	303	183
FED. ROAD DIST. NO. 7	ILLINOIS	FED. AID PROJECT-		

SHEET NO.
SHEETS

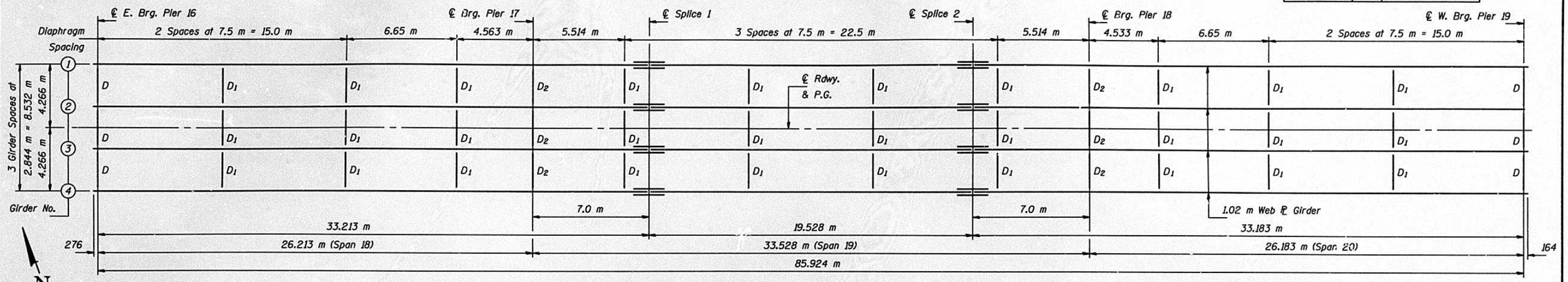

FRAMING PLAN

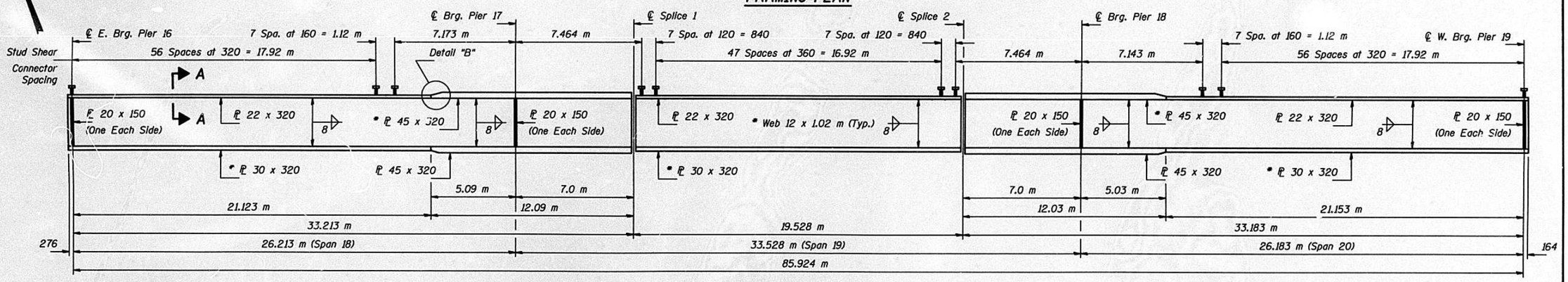

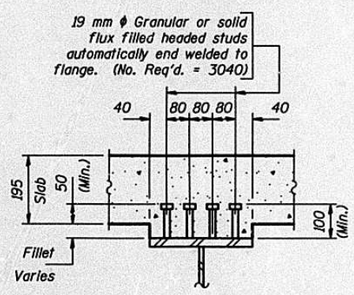

SECTION A-A

GIRDER ELEVATION

* Denotes plates to which Notch Toughness Requirements are applicable. All plates of the Girders including the bearing stiffeners shall be AASHTO M 270M, Gr. 345.

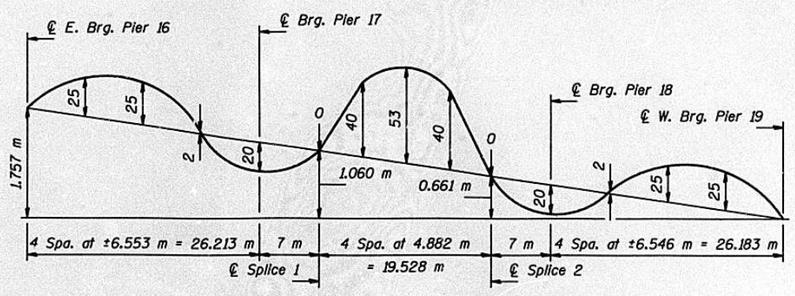

CAMBER DIAGRAM - SPANS 18, 19 & 20

** TOP OF WEB ELEVATIONS SPANS 18 THRU 20

Loc. \ Gir.	Girders 1 & 4	Girders 2 & 3
℄ E. Brg. Pier 16	149.109	149.154
℄ Brg. Pier 17	148.537	148.585
℄ Splice 1	148.409	148.458
℄ Splice 2	148.010	148.059
℄ Brg. Pier 18	147.851	147.899
℄ W. Brg. Pier 19	147.351	147.397

** For fabrication only.

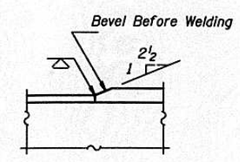

DETAIL "B"

Notes:
Work with Drawing E12.

DESIGNED	S. Moynihan
CHECKED	S.D. Gnann
DRAWN	John F. Schneller Jr.
CHECKED	S.E.M. S.D.G. J.K.K.

March 10, 1999
EXAMINED — ENGINEER OF BRIDGE DESIGN
PASSED — ENGINEER OF BRIDGES AND STRUCTURES

STRUCTURAL STEEL
SPANS 18 THRU 20
F.A. ROUTE 317 SECTION 15B-1-8
PEORIA AND TAZEWELL COUNTIES
STATION 6+791.262

DWG. NO. E10

STATE OF ILLINOIS
DEPARTMENT OF TRANSPORTATION

ROUTE NO.	SECTION	COUNTY	TOTAL SHEETS	SHEET NO.
F.A. 317	15B-I-8	PEORIA & TAZEWELL	303	184
FED. ROAD DIST. NO. 7		ILLINOIS	FED. AID PROJECT-	

SHEET NO.
SHEETS

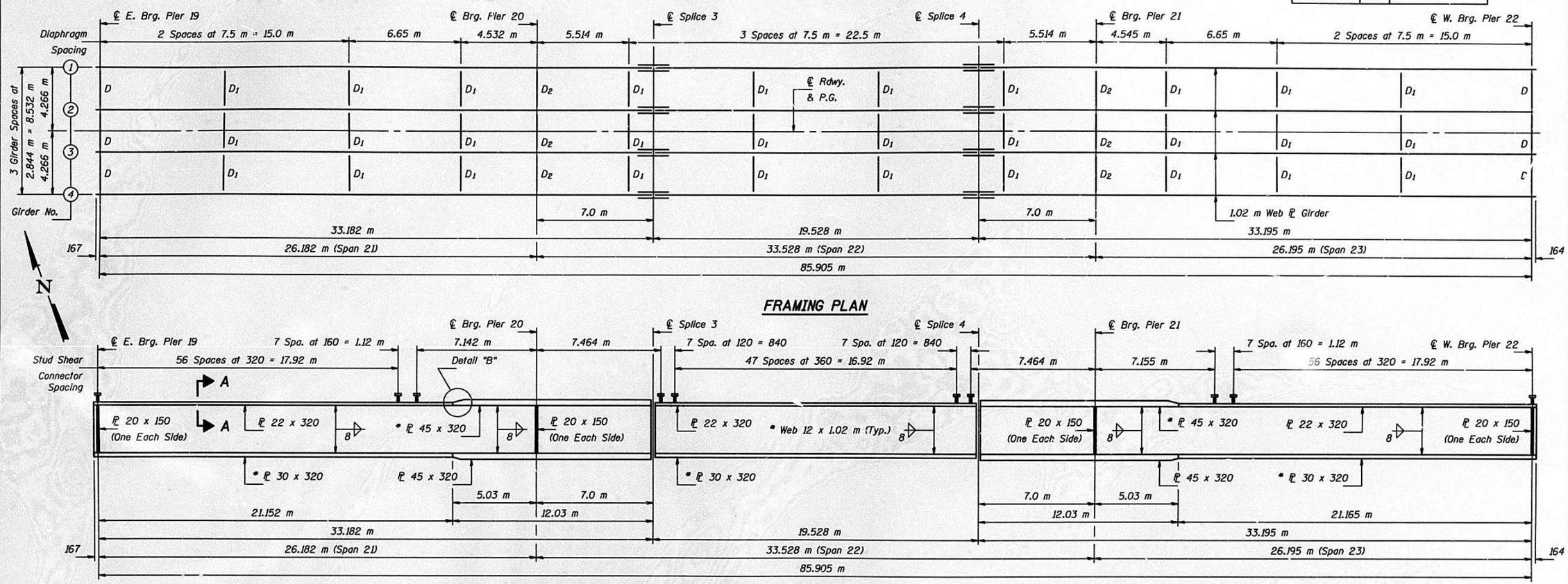

FRAMING PLAN

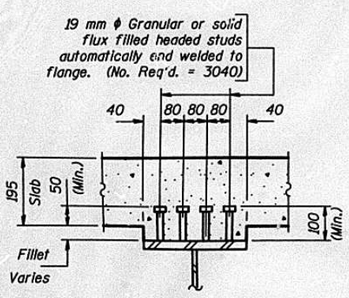

SECTION A-A

GIRDER ELEVATION

* Denotes plates to which Notch Toughness Requirements are applicable. All plates of the Girders including the bearing stiffeners shall be AASHTO M 270M, Gr. 345.

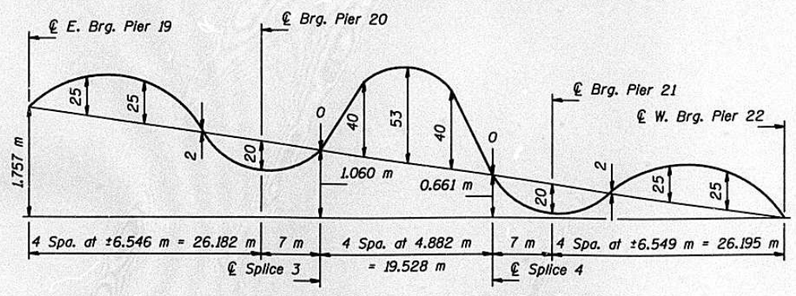

CAMBER DIAGRAM - SPANS 21, 22 & 23

** TOP OF WEB ELEVATIONS SPANS 21 THRU 23

Loc. / Gir.	Girders 1 & 4	Girders 2 & 3
℄ E. Brg. Pier 19	147.340	147.386
℄ Brg. Pier 20	146.770	146.818
℄ Splice 3	146.642	146.691
℄ Splice 4	146.243	146.292
℄ Brg. Pier 21	146.084	146.132
℄ W. Brg. Pier 22	145.584	145.629

** For fabrication only.

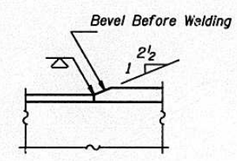

DETAIL "B"

Notes:
Work with Drawing E12.

DESIGNED	S. Moynihan
CHECKED	S.D. Gnann
DRAWN	John F. Schneller Jr.
CHECKED	S.E.M. S.D.G. J.K.K.

March 10, 1999
EXAMINED — ENGINEER OF BRIDGE DESIGN
PASSED — ENGINEER OF BRIDGES AND STRUCTURES

STRUCTURAL STEEL
SPANS 21 THRU 23
F.A. ROUTE 317 SECTION 15B-I-8
PEORIA AND TAZEWELL COUNTIES
STATION 6+791.262

DWG. NO. E11

D C B A 0 A B C
TAMERAN

STATE OF ILLINOIS
DEPARTMENT OF TRANSPORTATION

ROUTE NO.	SECTION	COUNTY	TOTAL SHEETS	SHEET NO.
F.A. 317	15B-1-8	PEORIA & TAZEWELL	303	189
FED. ROAD DIST. NO. 7	ILLINOIS	FED. AID PROJECT-		

SHEET NO.
SHEETS

INTERIOR BEAM MOMENT TABLE		0.4 Sp. 18 or 0.4 Sp. 21 or 0.6 Sp. 20 or 0.6 Sp. 23	Piers 17, 18, 20 & 21	0.5 Sp. 19 or 0.5 Sp. 22
Is	(10^6 mm^4)	5462	9138	5462
Ic (n)	(10^6 mm^4)	14410	—	14410
Ic (3n)	(10^6 mm^4)	10674	—	10674
Ss	(10^3 mm^3)	11127	16469	11127
Sc (n)	(10^3 mm^3)	15273	—	15273
Sc (3n)	(10^3 mm^3)	14109	—	14109
D	(kN/m)	16.2	19.4	16.4
MDL	(kN·m)	673	1907	657
sDL	(kN/m)	3.1	—	3.1
MsDL	(kN·m)	154	—	181
MLL	(kN·m)	1219	1040	1352
M (Imp)	(kN·m)	292	229	288
S_3[MLL+M(Imp)]	(kN·m)	2518	2115	2733
Ma	(kN·m)	4349	5229	4643
fsDL non-comp	(MPa)	60	116	59
fsDL (comp)	(MPa)	11	—	13
fsS_3(LL+Imp)	(MPa)	165	128	179
fs (Overload)	(MPa)	236	244	251
fs (Total)	(MPa)	307	317	326
VR	(kN)	324	—	280

INTERIOR BEAM REACTION TABLE		E. Brg. Pier 16, W. Brg. Pier 19, E. Brg. Pier 19, W. Brg. Pier 22	Piers 17, 18, 20 & 21
RDL	(kN)	180	653
RLL	(kN)	237	373
Imp.	(kN)	57	82
R (Total)	(kN)	474	1108

Is and Ss are the moment of inertia and section modulus of the steel section used in computing fs (Total & Overload).

Ic(n) and Sc(n) are the moment of inertia and section modulus of the composite section used in computing stresses due to Live Load.

Ic(3n) and Sc(3n) are the moment of inertia and section modulus of the composite section used in computing stresses due to superimposed dead loads. (see AASHTO 10.38)

VR is the maximum Live Load + Impact shear range in span.

Ma (Applied Moment) = 1.3[MDL + MsDL + S_3(MLL + MImp)].

fs (Overload) is the sum of the stresses due to MDL + MsDL + S_3(MLL + MImp).

fs (Total) (Non-compact section) is the sum of the stresses due to 1.3[MDL + MsDL + S_3(MLL + MImp)].

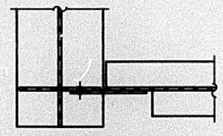

SECTION A-A

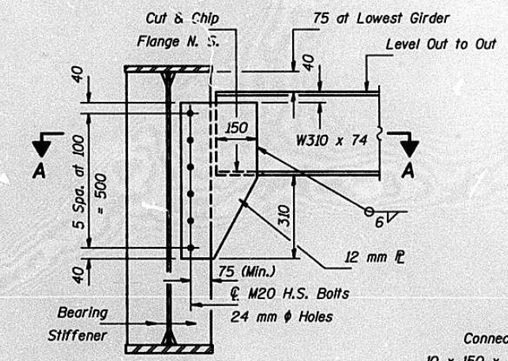

DIAPHRAGM D
(12 Required)

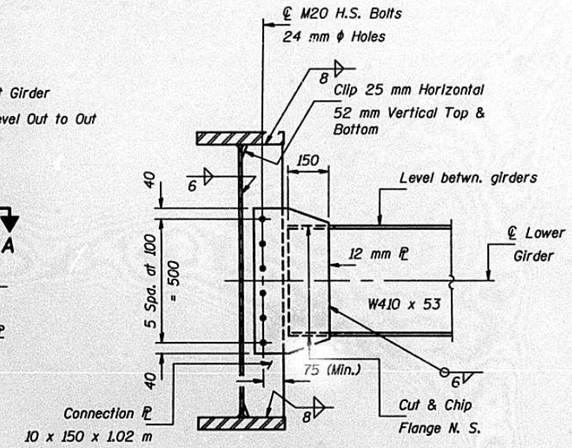

DIAPHRAGM D1
(60 Required)

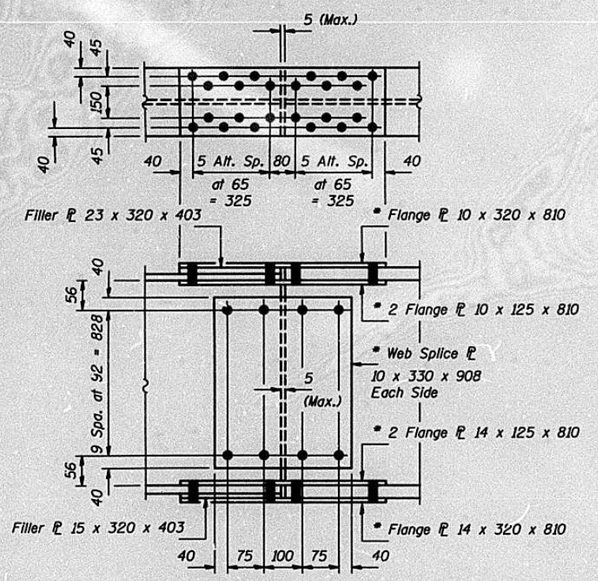

SPLICES 1, 2, 3 & 4
(Use M22 H.S. Bolts)
* Indicates splice plates which are AASHTO M 270M, Grade 345 and to which Notch Toughness Requirements are applicable.

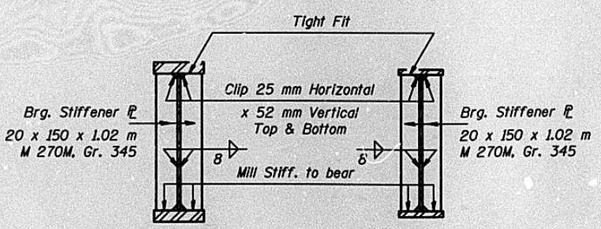

SECTION AT PIERS 17, 18, 20 & 21

SECTION AT PIERS 16, 19 & 22

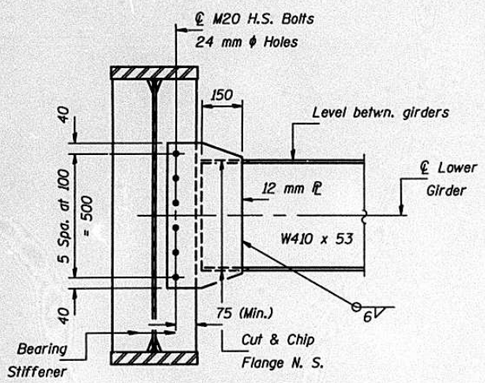

DIAPHRAGM D2
(12 Required)

Notes: Two hardened washers shall be required over all oversize holes for Diaphragms.
Work with Drawings E10 & E11.

DESIGNED	S. Moynihan
CHECKED	S.D. Gnann
DRAWN	John F. Schaeller Jr.
CHECKED	S.E.M. S.D.G. J.K.K.

March 10, 1999
EXAMINED — ENGINEER OF BRIDGE DESIGN
PASSED — ENGINEER OF BRIDGES AND STRUCTURES

STRUCTURAL STEEL DETAILS
SPANS 18 THRU 23
F.A. ROUTE 317 SECTION 15B-1-8
PEORIA AND TAZEWELL COUNTIES
STATION 6+791.262

DWG. NO. E12

TAMERAN

STATE OF ILLINOIS
DEPARTMENT OF TRANSPORTATION

ROUTE NO.	SECTION	COUNTY	TOTAL SHEETS	SHEET NO.
F.A. 317	15B-1-8	PEORIA & TAZEWELL	303	186
FED. ROAD DIST. NO. 7	ILLINOIS	FED. AID PROJECT-		

SHEET NO.
SHEETS

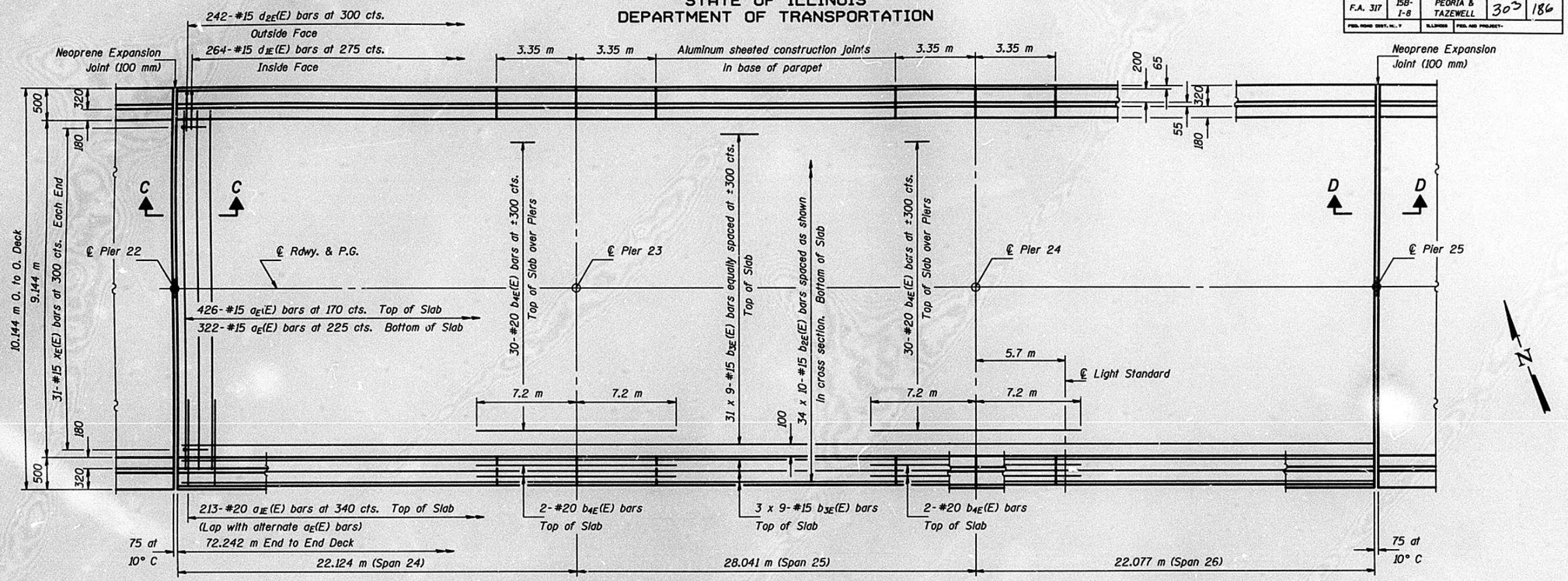

PLAN

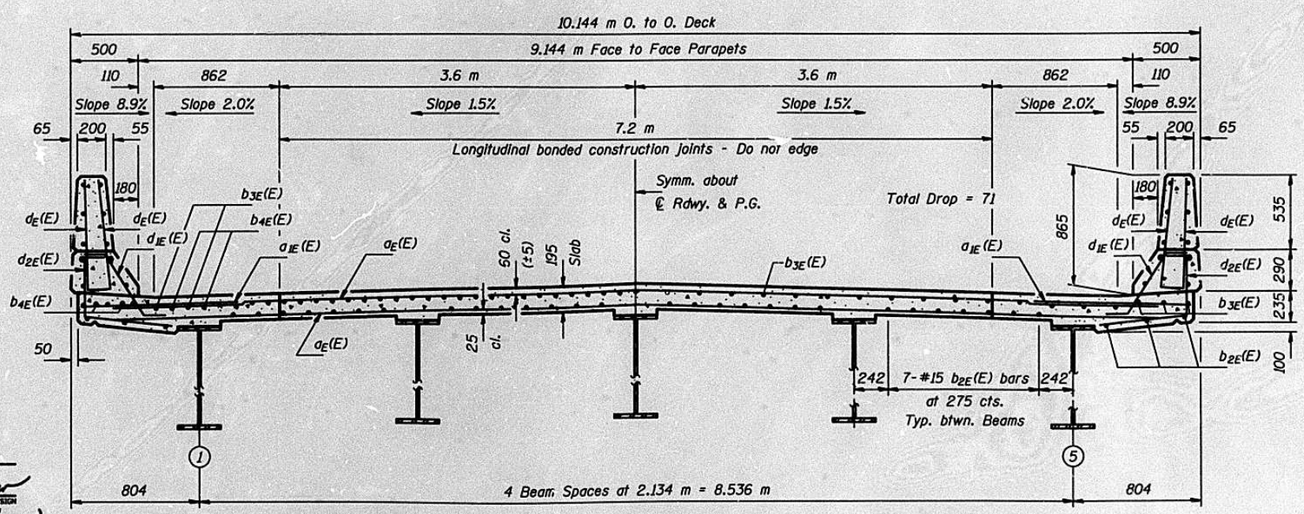

CROSS SECTION
(Looking East)

MIN. BAR LAP (SLAB)
#15 bars = 510

Notes: See Drawing E14 for superstructure details, Section D-D, parapet reinforcement, Bar Details and Bill of Material.
See Drawing E8 for Section C-C.
Reinforcement bars designated (E) shall be epoxy coated.
Bars indicated thus 20 x 3-#15 etc. indicates 20 lines of bars with 3 lengths per line.
For Light Standard Details, see Drawing E21.
For Scupper locations, see Drawing E25.

DESIGNED	S. Moynihan
CHECKED	S.D. Gnann
DRAWN	John F. Schneller Jr.
CHECKED	S.E.M. S.D.G. J.K.K.

March 10, 1999
EXAMINED Raj D. Kasper ENGINEER OF BRIDGE DESIGN
PASSED Ralph E. Anderson ENGINEER OF BRIDGES AND STRUCTURES

SUPERSTRUCTURE
SPANS 24 THRU 26
F.A. ROUTE 317 SECTION 15B-1-8
PEORIA AND TAZEWELL COUNTIES
STATION 6+791.262

DWG. NO. E13

TAMERAN

STATE OF ILLINOIS
DEPARTMENT OF TRANSPORTATION

ROUTE NO.	SECTION	COUNTY	TOTAL SHEETS	SHEET NO.
F.A. 317	158-1-8	PEORIA & TAZEWELL	303	187
FED. ROAD DIST. NO. 7	ILLINOIS	FED. AID PROJECT-		

SHEET NO.
SHEETS

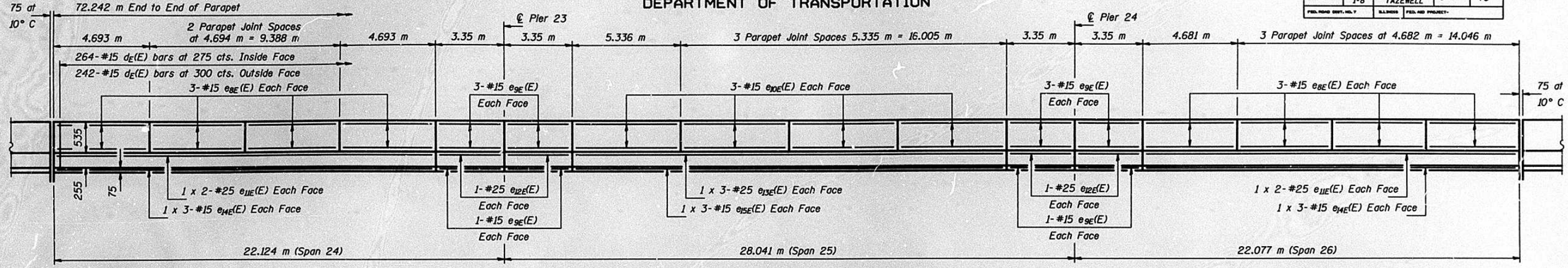

INSIDE ELEVATION OF PARAPET

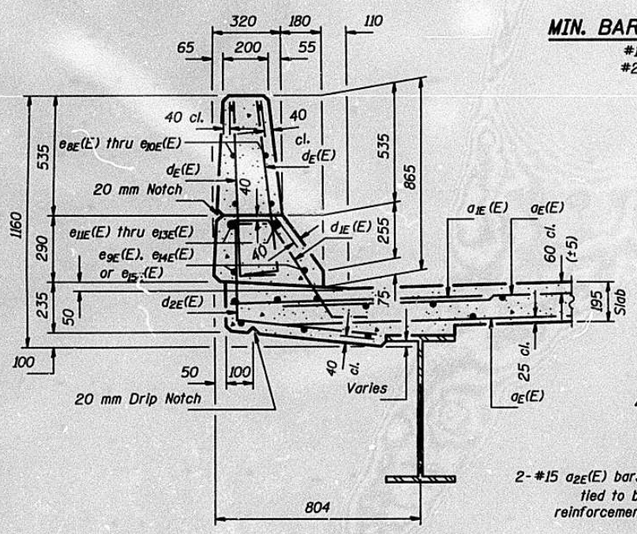

SECTION THRU PARAPET

MIN. BAR LAP (PARAPET)

#15 bars = 490
#25 bars = 1010

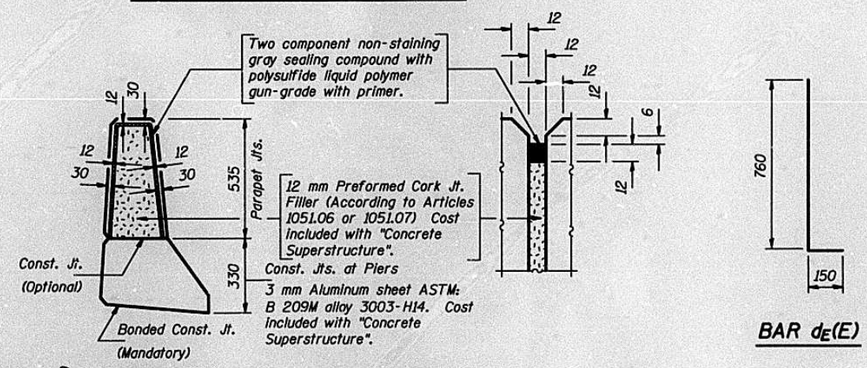

PARAPET JOINT DETAILS

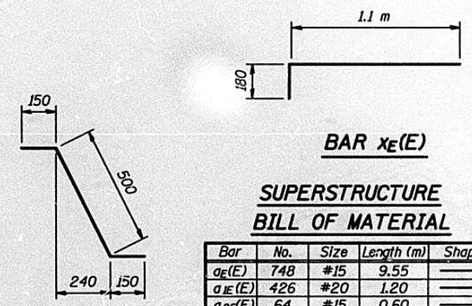

BAR $x_E(E)$

BAR $d_E(E)$

BAR $d_{1E}(E)$

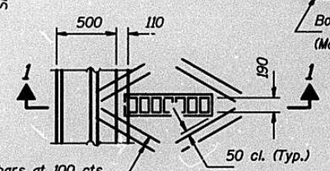

PLAN

Cut longitudinal reinforcement bars to clear scupper.

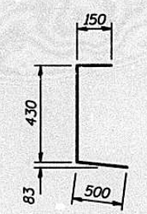

BAR $d_{2E}(E)$

SUPERSTRUCTURE BILL OF MATERIAL

Bar	No.	Size	Length (m)	Shape
$a_E(E)$	748	#15	9.55	—
$a_{1E}(E)$	426	#20	1.20	—
$a_{2E}(E)$	64	#15	0.60	—
$b_{2E}(E)$	340	#15	7.68	—
$b_{3E}(E)$	333	#15	8.48	—
$b_{4E}(E)$	68	#20	14.40	—
$d_E(E)$	1012	#15	0.91	—
$d_{1E}(E)$	528	#15	0.80	⅃
$d_{2E}(E)$	484	#15	1.08	⅂
$d_{3E}(E)$	5	#20	2.68	⅃⅂
$d_{4E}(E)$	3	#20	1.34	⅃
$e_{8E}(E)$	96	#15	4.59	—
$e_{9E}(E)$	64	#15	3.27	—
$e_{10E}(E)$	48	#15	5.26	—
$e_{11E}(E)$	16	#25	9.87	—
$e_{12E}(E)$	16	#25	3.27	—
$e_{13E}(E)$	12	#25	7.76	—
$e_{14E}(E)$	24	#15	6.57	—
$e_{15E}(E)$	12	#15	7.41	—
				—
$x_E(E)$	62	#15	1.28	—
Reinforcement Bars, Epoxy Coated			kg	29,410
Concrete Superstructure			m^3	190.5

Notes: Reinforcement bars designated (E) shall be epoxy coated.
Bars indicated thus 1 x 3-#15 etc. indicates 1 lines of bars with 3 lengths per line.
For details of bars $d_{3E}(E)$ and $d_{4E}(E)$, see Drawing E21.

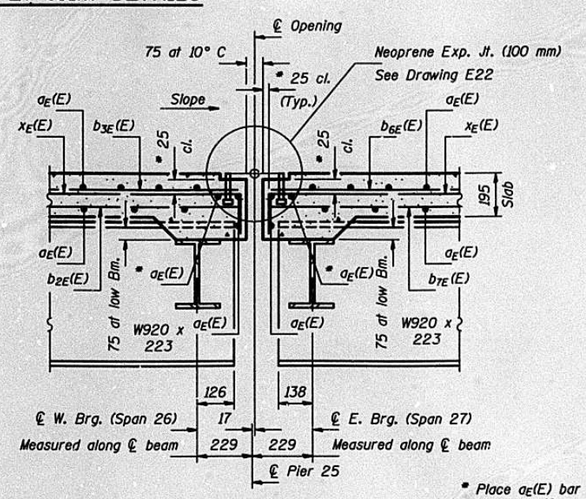

SECTION D-D

* Place $a_E(E)$ bar in back of Anchor bolts as shown if required to maintain 25 mm cl. (+0-3 mm). Anchor bolts should be tied to $a_E(E)$ bars.

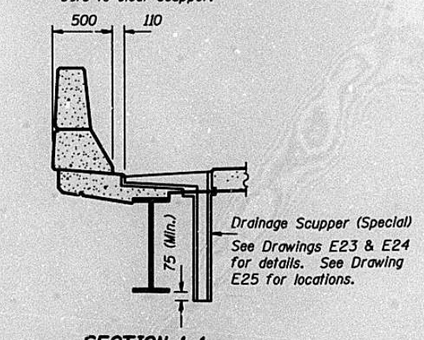

SECTION 1-1

DESIGNED	S. Moynihan
CHECKED	S.D. Gnann
DRAWN	John F. Schneller Jr.
CHECKED	S.E.M. S.D.G. J.K.K.

March 10, 1999
EXAMINED — ENGINEER OF BRIDGE DESIGN
PASSED — ENGINEER OF BRIDGES AND STRUCTURES

SUPERSTRUCTURE DETAILS
SPANS 24 THRU 26
F.A. ROUTE 317 SECTION 15B-1-8
PEORIA AND TAZEWELL COUNTIES
STATION 6+791.262

DWG. NO. E14

STATE OF ILLINOIS
DEPARTMENT OF TRANSPORTATION

ROUTE NO.	SECTION	COUNTY	TOTAL SHEETS	SHEET NO.
F.A. 317	15B-1-8	PEORIA & TAZEWELL	303	188
FED. ROAD DIST. NO. 7	ILLINOIS	FED. AID PROJECT-		

SHEET NO.
SHEETS

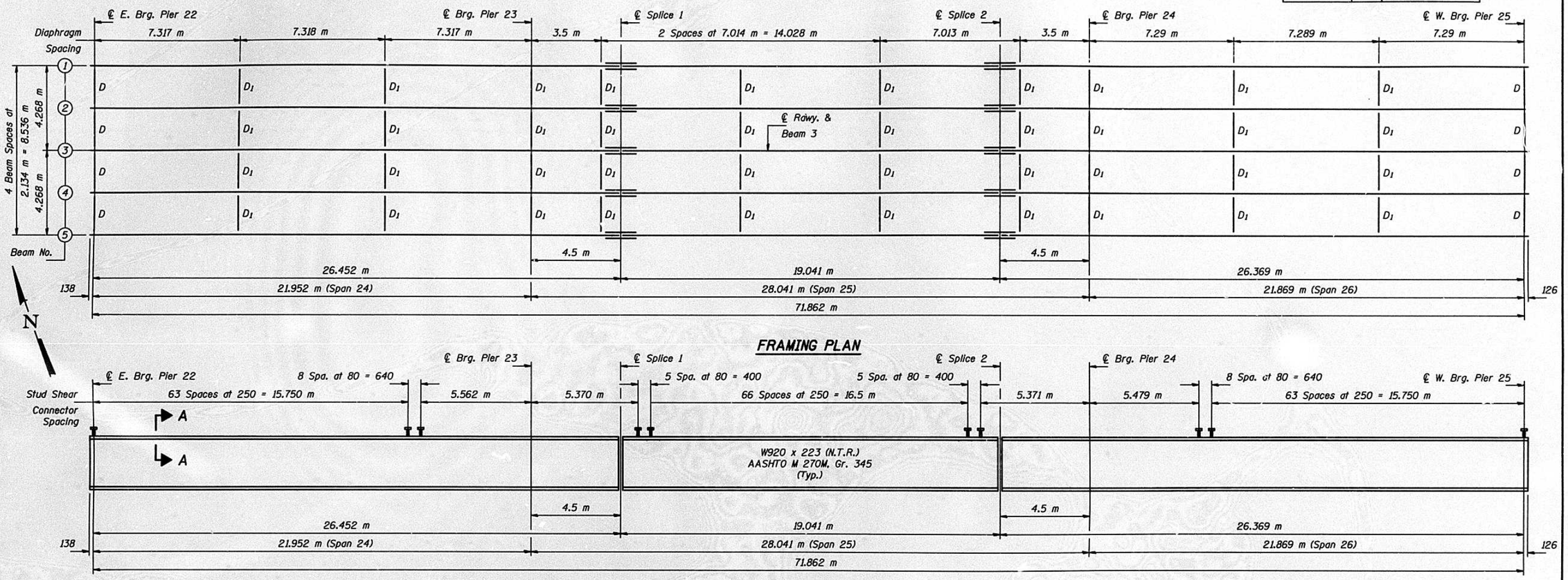

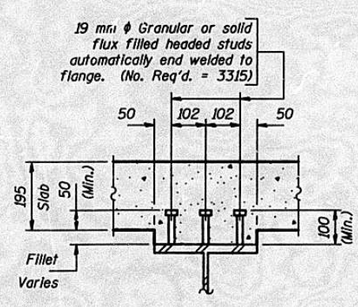

SECTION A-A

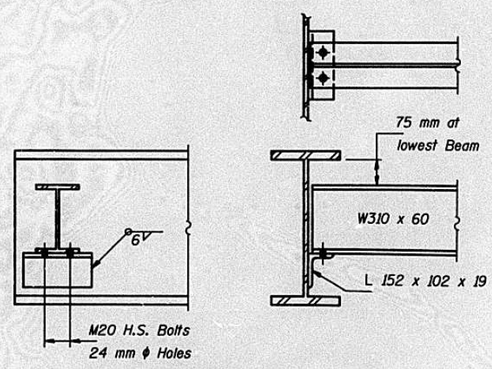

DIAPHRAGM D
(8 Required)

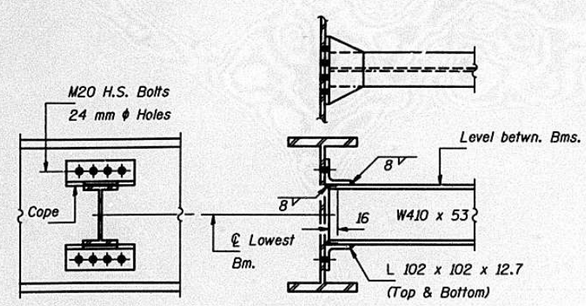

DIAPHRAGM D_1
(40 Required)

Note: Two hardened washers shall be required over all oversize holes for diaphragms.
"N.T.R." denotes members to which Notch Toughness Requirements are applicable.

DESIGNED	S. Moynihan
CHECKED	S.D. Gnann
DRAWN	John F. Schneller Jr.
CHECKED	S.E.M. S.D.G. J.K.K.

March 10, 1999
EXAMINED Jaj J. Kaspar — ENGINEER OF BRIDGE DESIGN
PASSED Ralph E. Anderson — ENGINEER OF BRIDGES AND STRUCTURES

STRUCTURAL STEEL
SPANS 24 THRU 26
F.A. ROUTE 317 SECTION 15B-1-8
PEORIA AND TAZEWELL COUNTIES
STATION 6+791.262

DWG. NO. E15

D C B A 0 A B C
TAMERAN

STATE OF ILLINOIS
DEPARTMENT OF TRANSPORTATION

ROUTE NO.	SECTION	COUNTY	TOTAL SHEETS	SHEET NO.
F.A. 317	158-1-8	PEORIA & TAZEWELL	303	189
FED. ROAD DIST. NO. 7		ILLINOIS	FED. AID PROJECT-	

SHEET NO.
SHEETS

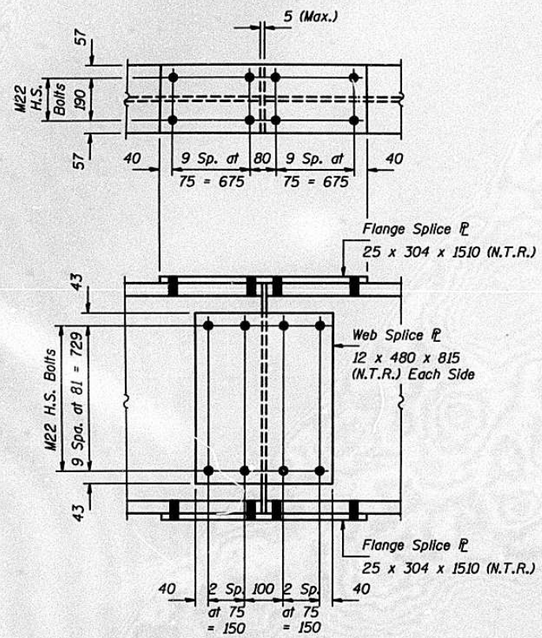

SPLICES 1 & 2

"N.T.R." denotes plates to which Notch Toughness Requirements are applicable.

All splice plates shall be AASHTO M 270M, Grade 345.

INTERIOR BEAM MOMENT TABLE		0.4 Sp. 24 or 0.6 Sp. 26	Pier 23 or Pier 24	0.5 Sp. 25
Is	(10^6 mm^4)	3763	3763	3763
Ic (n)	(10^6 mm^4)	9556	—	9556
Ic (3n)	(10^6 mm^4)	7022	—	7022
Ss	(10^3 mm^3)	8259	8259	8259
Sc (n)	(10^3 mm^3)	11964	—	11864
Sc (3n)	(10^3 mm^3)	10734	—	10734
wD	(kN/m)	12.6	15.0	12.6
MDL	(kN·m)	408	928	436
sDL	(kN/m)	2.4	—	2.4
MsDL	(kN·m)	93	—	118
MLL	(kN·m)	760	496	863
M (Imp)	(kN·m)	190	119	198
$\frac{5}{3}$[MLL+M(Imp)]	(kN·m)	1583	1025	1768
Ma	(kN·m)	2709	2539	3019
fsDL non-comp	(MPa)	49	112	53
fsDL (comp)	(MPa)	9	—	11
fs$\frac{5}{3}$(LL+Imp)	(MPa)	133	124	149
fs (Overload)	(MPa)	191	236	213
fs (Total)	(MPa)	248	307	277
VR	(kN)	238	—	206

INTERIOR BEAM REACTION TABLE		E. Brg. Pier 22 or W. Brg. Pier 25	Pier 23 or Pier 24
RDL	(kN)	123	419
RLL	(kN)	174	243
Imp.	(kN)	43	58
R (Total)	(kN)	340	720

Is and Ss are the moment of inertia and section modulus of the steel section used in computing fs (Total & Overload).

$I_{c(n)}$ and $S_{c(n)}$ are the moment of inertia and section modulus of the composite section used in computing stresses due to Live Load.

$I_{c(3n)}$ and $S_{c(3n)}$ are the moment of inertia and section modulus of the composite section used in computing stresses due to superimposed dead loads. (see AASHTO 10.38)

VR is the maximum Live Load + Impact shear range in span.

Ma (Applied Moment) = $1.3[M_{DL} + M_{sDL} + \frac{5}{3}(M_{LL} + M_{Imp})]$.

fs (Overload) is the sum of the stresses due to $M_{DL} + M_{sDL} + \frac{5}{3}(M_{LL} + M_{Imp})$.

fs (Total) (Non-compact section) is the sum of the stresses due to $1.3[M_{DL} + M_{sDL} + \frac{5}{3}(M_{LL} + M_{Imp})]$.

* TOP OF FLANGE ELEVATIONS

Loc. / Bm.	Bm. 1 & 5	Bm. 2 & 4	Beam 3
℄ E. Brg. Pier 22	145.603	145.638	145.670
℄ Brg. Pier 23	145.140	145.175	145.207
℄ Splice 1	145.045	145.080	145.112
℄ Splice 2	144.656	144.691	144.723
℄ Brg. Pier 24	144.567	144.602	144.634
℄ W. Brg. Pier 25	144.134	144.169	144.201

* For fabrication only.

DESIGNED	S. Maynihan
CHECKED	S.D. Gnann
DRAWN	John F. Schneller Jr.
CHECKED	S.E.M. S.D.G. J.K.K.

March 10, 1999

EXAMINED Engineer of Bridge Design

PASSED Engineer of Bridges and Structures

STRUCTURAL STEEL DETAILS
SPANS 24 THRU 26
F.A. ROUTE 317 SECTION 15B-1-8
PEORIA AND TAZEWELL COUNTIES
STATION 6+791.262

DWG. NO. E16

STATE OF ILLINOIS
DEPARTMENT OF TRANSPORTATION

ROUTE NO.	SECTION	COUNTY	TOTAL SHEETS	SHEET NO.
F.A. 317	15B-1-8	PEORIA & TAZEWELL	303	190
FED. ROAD DIST. NO. 7	ILLINOIS	FED. AID PROJECT-		

SHEET NO.
SHEETS

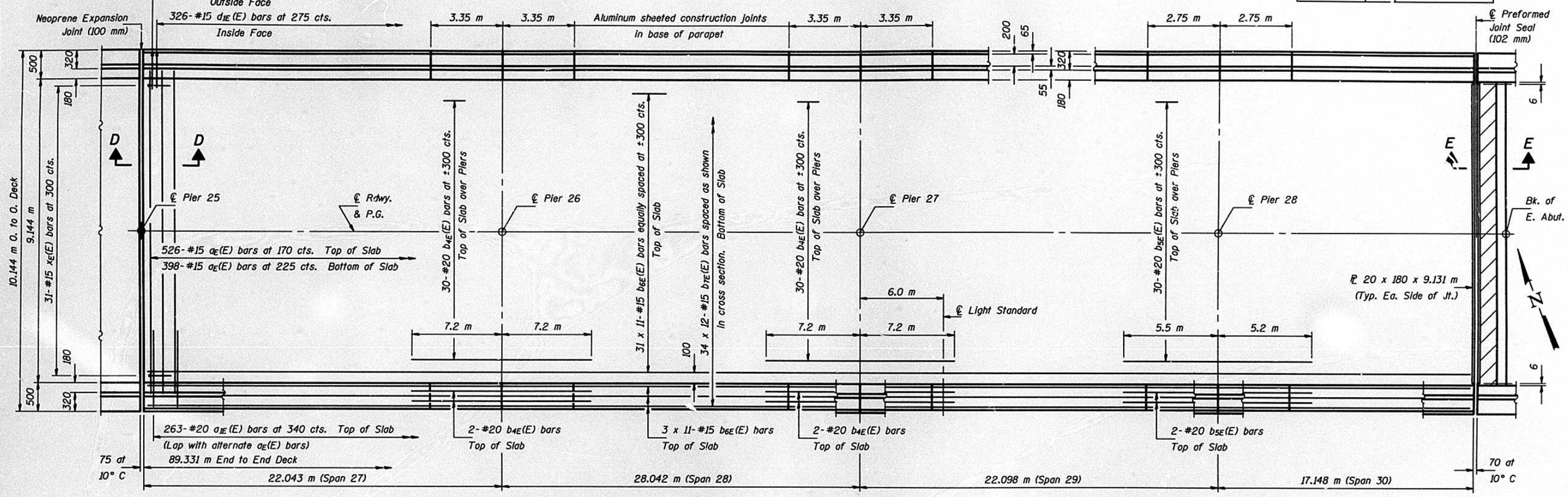

PLAN

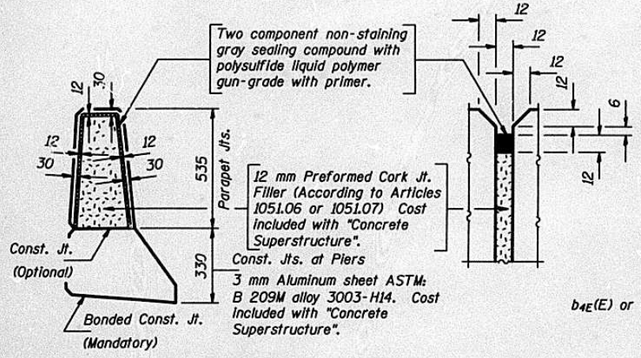

PARAPET JOINT DETAILS

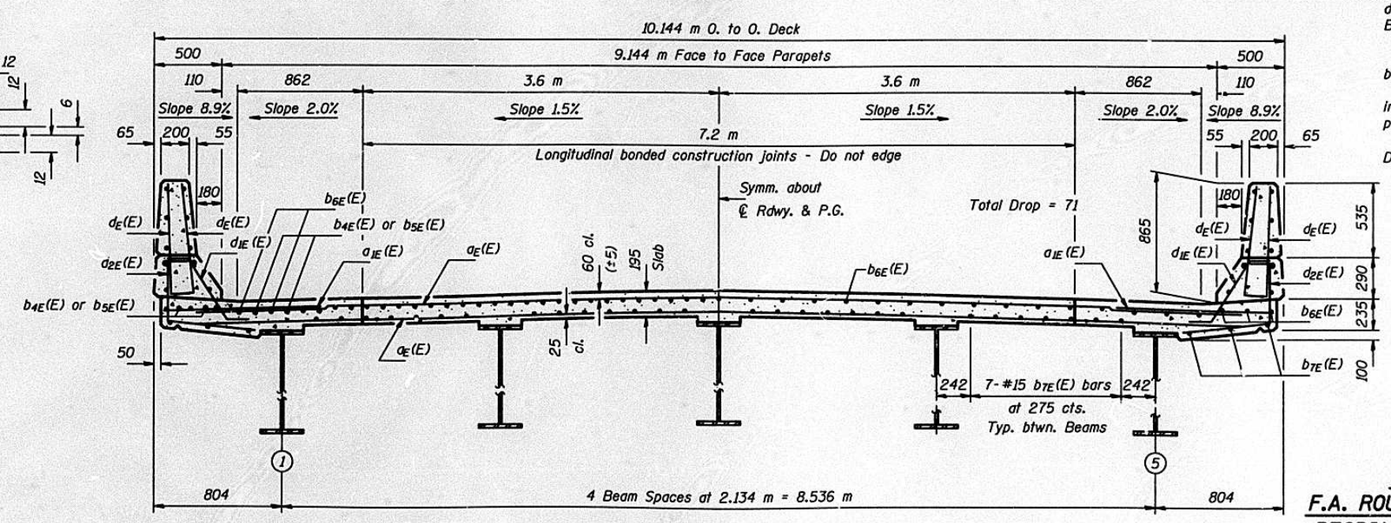

CROSS SECTION
(Looking East)

Notes: See Drawing E18 for superstructure details, Section E-E, parapet reinforcement, Bar Details and Bill of Material.
See Drawing E14 for Section D-D.
Reinforcement bars designated (E) shall be epoxy coated.
Bars indicated thus 20 x 3-#15 etc. indicates 20 lines of bars with 3 lengths per line.
For Light Standard Details, see Drawing E21.
For Scupper locations, see Drawing E25.

MIN. BAR LAP (SLAB)
#15 bars = 510

DESIGNED	S. Moynihan
CHECKED	S.D. Gnann
DRAWN	John F. Schneller Jr.
CHECKED	S.E.M. S.D.G. J.K.K.

March 10, 1999
EXAMINED Jaj J. Kaspar ENGINEER OF BRIDGE DESIGN
PASSED Ralph E. Anderson ENGINEER OF BRIDGES AND STRUCTURES

SUPERSTRUCTURE
SPANS 27 THRU 30
F.A. ROUTE 317 SECTION 15B-1-8
PEORIA AND TAZEWELL COUNTIES
STATION 6+791.262

DWG. NO. E17

C C B B A A 0 A A B B C C D D
TAMERAN

ROUTE NO.	SECTION	COUNTY	TOTAL SHEETS	SHEET NO.
F.A. 317	15B-1-8	PEORIA & TAZEWELL	303	191
FED. ROAD DIST. NO. 7	ILLINOIS	FED. AID PROJECT-		

SHEET NO.
SHEETS

STATE OF ILLINOIS
DEPARTMENT OF TRANSPORTATION

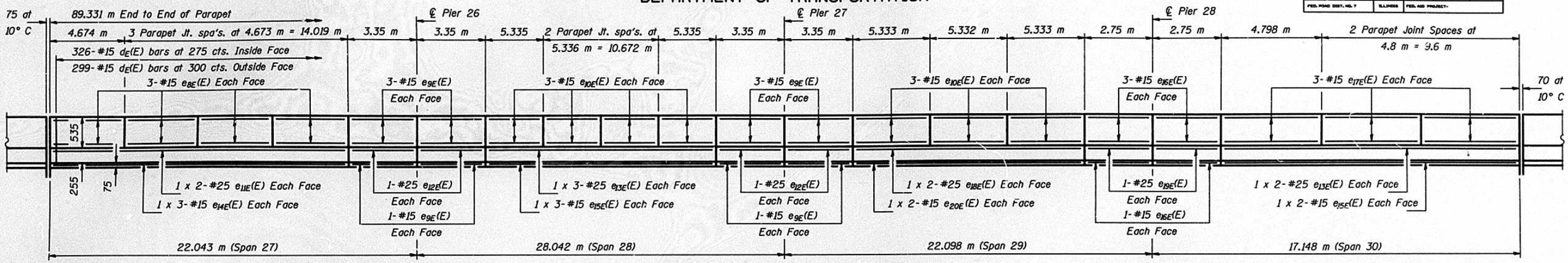

INSIDE ELEVATION OF PARAPET

Notes: Bars indicated thus 1 x 3-#15 etc. indicates 1 lines of bars with 3 lengths per line.
Reinforcement bars designated (E) shall be epoxy coated.
For details of bars $d_{3E}(E)$ and $d_{4E}(E)$, see Drawing E21.

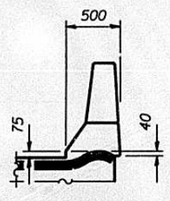

END TREATMENT

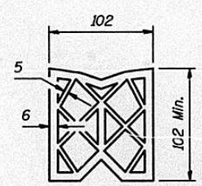

PREFORMED JOINT SEAL (102 mm)

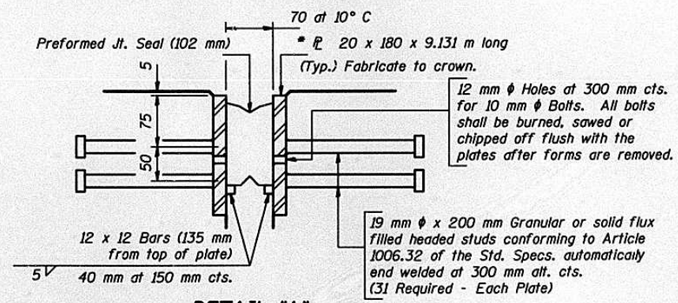

DETAIL "A"

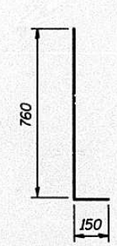

BARS $d_{E}(E)$

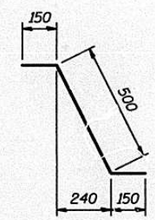

BAR $d_{1E}(E)$

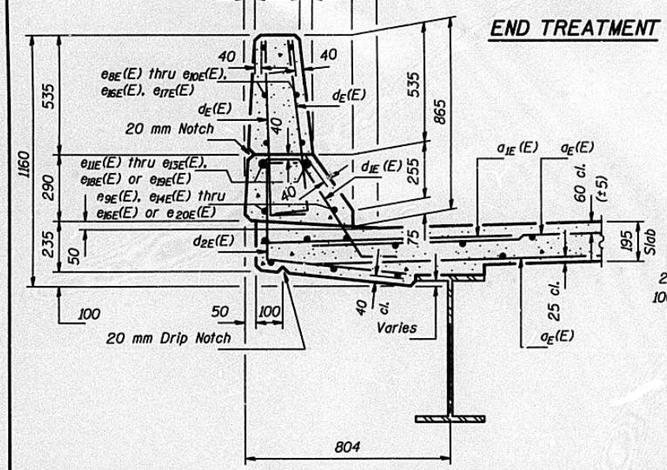

SECTION THRU PARAPET

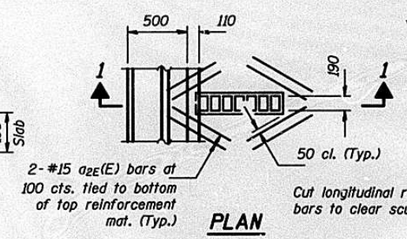

PLAN

* Furnish in segments of 6 m maximum length. Maximum space between installed segments shall be 5 mm. Seal space with Silicone Sealant suitable for Structural Steel.

Note: After fabrication all surfaces of the steel plates shall be given one shop coat of paint specified for structural steel. No field painting required.

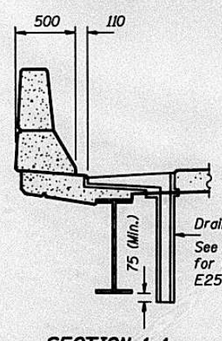

SECTION 1-1

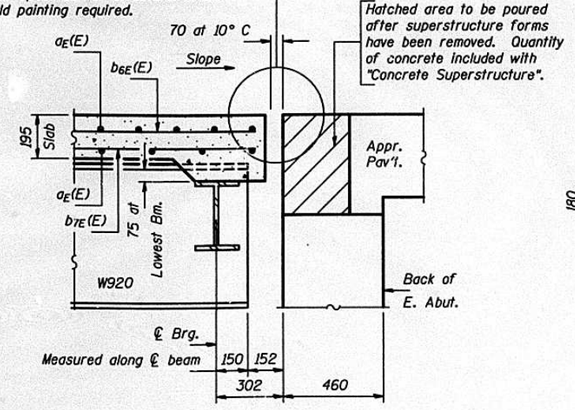

SECTION E-E

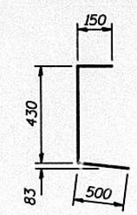

BAR $d_{2E}(E)$

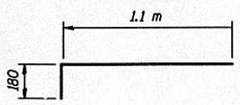

BAR $x_{E}(E)$

MIN. BAR LAPS (PARAPET)

#15 bars = 490
#25 bars = 1010

SUPERSTRUCTURE BILL OF MATERIAL

Bar	No.	Size	Length (m)	Shape
$a_{2E}(E)$	924	#15	9.55	
$a_{1E}(E)$	526	#20	1.20	
$a_{2E}(E)$	80	#15	0.60	
$b_{4E}(E)$	68	#20	14.40	
$b_{5E}(E)$	34	#20	10.70	
$b_{6E}(E)$	407	#15	8.58	
$b_{7E}(E)$	408	#15	7.91	
$d_{E}(E)$	1250	#15	0.91	
$d_{1E}(E)$	652	#15	0.80	
$d_{2E}(E)$	598	#15	1.08	
$d_{3E}(E)$	5	#20	2.68	
$d_{4E}(E)$	3	#20	1.34	
$e_{8E}(E)$	48	#15	4.59	
$e_{9E}(E)$	64	#15	3.27	
$e_{10E}(E)$	84	#15	5.26	
$e_{11E}(E)$	8	#25	9.87	
$e_{12E}(E)$	16	#25	3.27	
$e_{13E}(E)$	20	#25	7.76	
$e_{14E}(E)$	12	#15	6.57	
$e_{15E}(E)$	20	#15	7.41	
$e_{16E}(E)$	32	#15	2.67	
$e_{17E}(E)$	36	#15	4.72	
$e_{18E}(E)$	8	#25	8.46	
$e_{19E}(E)$	8	#25	2.67	
$e_{20E}(E)$	8	#15	8.20	
$x_{E}(E)$	31	#15	1.28	
Reinforcement Bars, Epoxy Coated			kg	36,550
Concrete Superstructure			m³	235.1

DESIGNED	S. Moynihan
CHECKED	S.D. Gnann
DRAWN	John F. Schneller Jr.
CHECKED	S.E.M. S.D.G. J.K.K.

March 10, 1999
EXAMINED Jerzy J. Kaspar ENGINEER OF BRIDGE DESIGN
PASSED Ralph E. Anderson ENGINEER OF BRIDGES AND STRUCTURES

SUPERSTRUCTURE DETAILS
SPANS 27 THRU 30
F.A. ROUTE 317 SECTION 15B-1-8
PEORIA AND TAZEWELL COUNTIES
STATION 6+791.262

DWG. NO. E18

TAMERAN

STATE OF ILLINOIS
DEPARTMENT OF TRANSPORTATION

ROUTE NO.	SECTION	COUNTY	TOTAL SHEETS	SHEET NO.
F.A. 317	15B-1-8	PEORIA & TAZEWELL	303	192
FED. ROAD DIST. NO. 7	ILLINOIS	FED. AID PROJECT-		

SHEET NO.
SHEETS

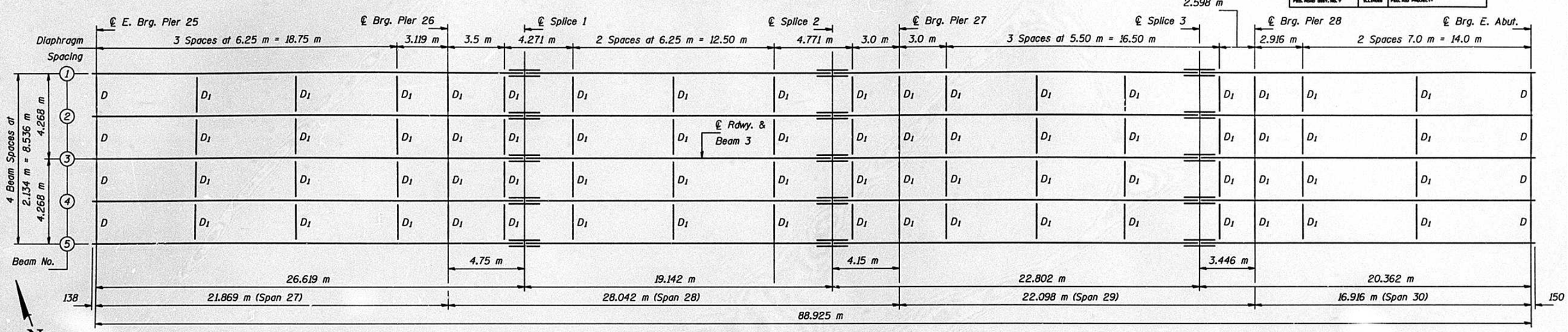

FRAMING PLAN

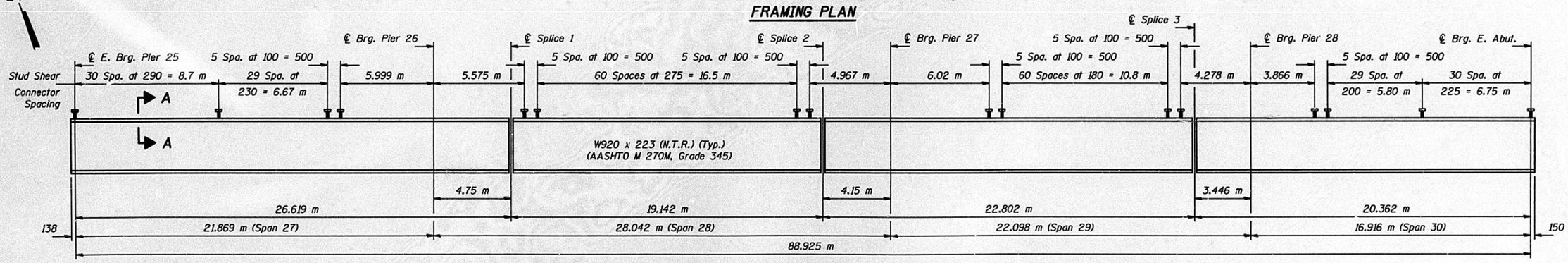

GIRDER ELEVATION

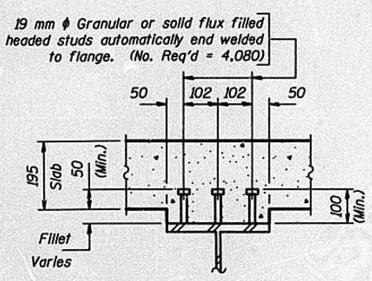

SECTION A-A

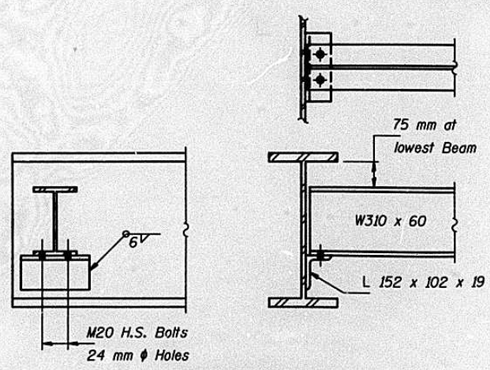

DIAPHRAGM D
(8 Required)

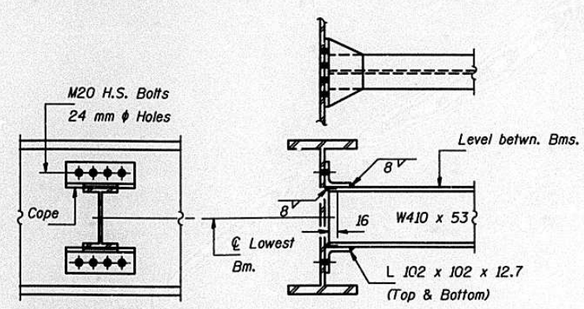

DIAPHRAGM D1
(68 Required)

Note: Two hardened washers shall be required over all oversize holes for diaphragms.
"N.T.R." denotes members to which Notch Toughness Requirements are applicable.

DESIGNED	S. Moynihan
CHECKED	S.D. Gnann
DRAWN	John F. Schneller Jr.
CHECKED	S.E.M. S.D.G. J.K.K.

March 10, 1999
EXAMINED — ENGINEER OF BRIDGE DESIGN
PASSED — ENGINEER OF BRIDGES AND STRUCTURES

STRUCTURAL STEEL
SPANS 27 THRU 30
F.A. ROUTE 317 SECTION 15B-I-8
PEORIA AND TAZEWELL COUNTIES
STATION 6+791.262

DWG. NO. E19

ROUTE NO.	SECTION	COUNTY	TOTAL SHEETS	SHEET NO.
F.A. 317	15B-1-8	PEORIA & TAZEWELL	303	193
FED. ROAD DIST. NO. 7	ILLINOIS	FED. AID PROJECT-		

SHEET NO.

SHEETS

STATE OF ILLINOIS
DEPARTMENT OF TRANSPORTATION

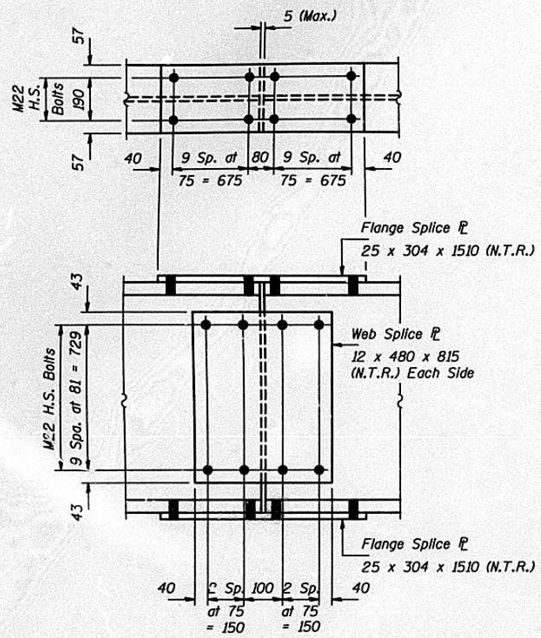

SPLICES 1, 2 & 3

"N.T.R." denotes plates to which Notch Toughness Requirements are applicable.

All splice plates shall be AASHTO M 270M, Grade 345.

INTERIOR BEAM MOMENT TABLE

	0.4 Sp. 27	℄ Pier 26	0.5 Sp. 28	℄ Pier 27	0.5 Sp. 29	℄ Pier 28	0.6 Sp. 30
Is (10^6 mm^4)	3763	3763	3763	3763	3763	3763	3763
Ic (n) (10^6 mm^4)	9556	—	9556	—	9556	—	9556
Ic (3n) (10^6 mm^4)	7022	—	7022	—	7022	—	7022
Ss (10^3 mm^3)	8259	8259	8259	8259	8259	8259	8259
Sc (n) (10^3 mm^3)	11864	—	11864	—	11864	—	11864
Sc (3n) (10^3 mm^3)	10734	—	10734	—	10734	—	10734
Z (10^3 mm^3)	—	9521	—	9521	—	9521	—
wD (kN/m)	12.6	15.0	12.6	15.0	12.6	15.0	12.6
MDL (kN-m)	390	945	470	811	199	497	261
sDL (kN/m)	2.4	—	2.4	—	2.4	—	2.4
MsDL (kN-m)	88	—	119	—	58	—	56
MLL (kN-m)	753	493	855	477	643	340	542
M (Imp) (kN-m)	191	119	197	115	163	90	150
$\frac{5}{3}$[MLL+M(Imp)] (kN-m)	1573	1021	1754	986	1343	718	1154
Ma (kN-m)	2666	2557	3045	2336	2080	1579	1913
Mu (kN-m)	—	3285	—	3285	—	3285	—
fsDL non-comp (MPa)	47	115	57	98	24	60	31
fsDL (comp) (MPa)	8	—	11	—	5	—	5
fs$\frac{5}{3}$(LL+Imp) (MPa)	133	124	148	119	113	87	97
fs (Overload) (MPa)	188	238	216	218	143	147	133
fs (Total) (MPa)	244	—	281	—	186	—	173
VR (kN)	238	—	206	—	208	—	232

INTERIOR BEAM REACTION TABLE

	E. Brg. Pier #25	Pier #26	Pier #27	Pier #28	E. Abut.
RDL (kN)	120	420	384	307	97
RLL (kN)	174	243	238	208	165
Imp. (kN)	44	59	57	55	46
R (Total) (kN)	338	722	679	570	308

Is and Ss are the moment of inertia and section modulus of the steel section used in computing fs (Total & Overload).

$Ic_{(n)}$ and $Sc_{(n)}$ are the moment of inertia and section modulus of the composite section used in computing stresses due to Live Load.

$Ic_{(3n)}$ and $Sc_{(3n)}$ are the moment of inertia and section modulus of the composite section used in computing stresses due to superimposed dead loads. (see AASHTO 10.38)

VR is the maximum Live Load + Impact shear range in span.

Ma (Applied Moment) = 1.3[MDL + MsDL + $\frac{5}{3}$(MLL + M_{Imp})].

fs (Overload) is the sum of the stresses due to MDL + MsDL + $\frac{5}{3}$(MLL + M_{Imp}).

fs (Total) (Non-compact section) is the sum of the stresses due to 1.3[MDL + MsDL + $\frac{5}{3}$(MLL + M_{Imp})].

Z is the plastic section modulus used to determine the fully plastic moments in the non-composite areas.

* TOP OF FLANGE ELEVATIONS

Loc. / Bm.	Beams 1 & 5	Beams 2 & 4	Beam 3
℄ E. Brg. Pier 25	144.124	144.159	144.191
℄ Brg. Pier 26	143.664	143.699	143.731
℄ Splice 1	143.564	143.599	143.631
℄ Splice 2	143.172	143.207	143.239
℄ Brg. Pier 27	143.086	143.121	143.153
℄ Splice 3	142.698	142.733	142.765
℄ Brg. Pier 28	142.632	142.667	142.699
℄ Brg. E. Abut.	142.305	142.340	142.372

* For fabrication only.

DESIGNED S. Moynihan	March 10, 1999
CHECKED S.D. Gnann	EXAMINED Jaj J. Kaspar — ENGINEER OF BRIDGE DESIGN
DRAWN John F. Schneller Jr.	PASSED Ralph E. Anderson — ENGINEER OF BRIDGES AND STRUCTURES
CHECKED S.E.M. S.D.G. J.K.K.	

STRUCTURAL STEEL DETAILS
SPANS 27 THRU 30
F.A. ROUTE 317 SECTION 15B-1-8
PEORIA AND TAZEWELL COUNTIES
STATION 6+791.262

DWG. NO. E20

ROUTE NO.	SECTION	COUNTY	TOTAL SHEETS	SHEET NO.
F.A. 317	15B-1-8	PEORIA & TAZEWELL	303	194
FED. ROAD DIST. NO. 7		ILLINOIS	FED. AID PROJECT-	

SHEET NO.

SHEETS

STATE OF ILLINOIS
DEPARTMENT OF TRANSPORTATION

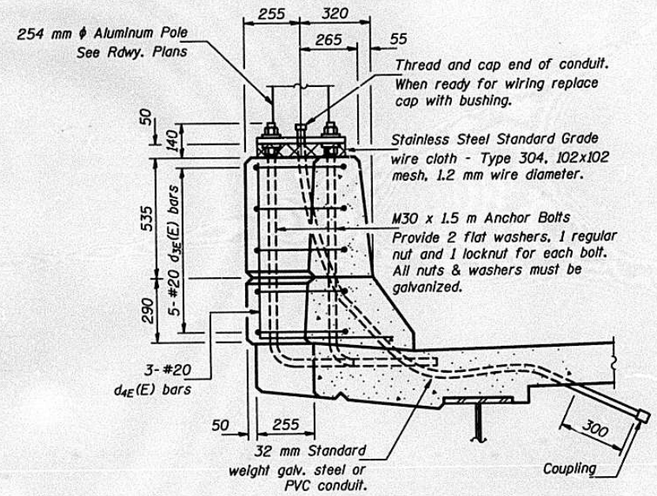

SECTION A-A

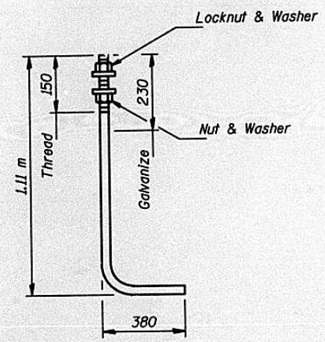

M30 ANCHOR BOLT

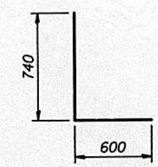

BAR $d_{4E}(E)$

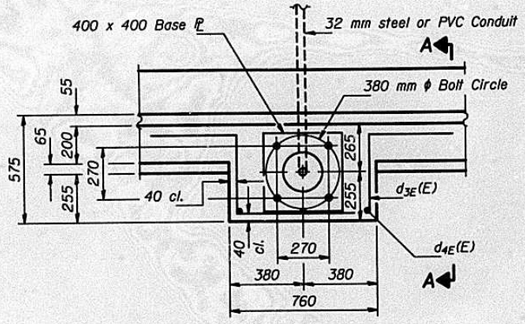

PLAN

Note: Cost of anchor bolts, nuts, washers, stainless steel wire cloth & conduit is included with "Concrete Superstructure" on Drawings E9, E14 and E18.

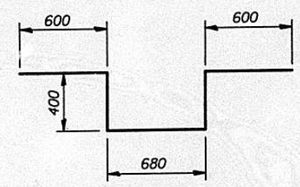

BAR $d_{3E}(E)$

ELECTRICAL LIGHTING DETAILS

Note: Bars $d_{3E}(E)$ & $d_{4E}(E)$ are billed on Drawings E9, E14 and E18.

DESIGNED	S. Moynihan
CHECKED	J. Klein
DRAWN	John F. Schneller Jr.
CHECKED	S.E.M. J.K.K.

March 10, 1999

EXAMINED Jaj J. Kaspar — ENGINEER OF BRIDGE DESIGN

PASSED Ralph E. Anderson — ENGINEER OF BRIDGES AND STRUCTURES

LIGHT STANDARD DETAILS
SPANS 18 THRU 30
F.A. ROUTE 317 SECTION 15B-I-8
PEORIA AND TAZEWELL COUNTIES
STATION 6+791.262

DWG. NO. E21

STATE OF ILLINOIS
DEPARTMENT OF TRANSPORTATION

ROUTE NO.	SECTION	COUNTY	TOTAL SHEETS	SHEET NO.	SHEET NO.
F.A. 317	15B-1-8	PEORIA & TAZEWELL	307	197	SHEETS
FED. ROAD DIST. NO. 7	ILLINOIS	FED. AID PROJECT-			

Joint Size	"C" at 10 °C	"D" at 10 °C
50	50	40 Min.
65	65	45 Min.
100	75	65 Min.

INSTALLATION NOTES

1. Install continuous seal in roadway, parapet, curb, and sidewalk.
2. Install anchor blocks as indicated.

NOTE A: Maximum spacing of anchor bolts shall be 300 centers.

SKEW LIMITATIONS

The details of the anchor blocks and the elastomeric membrane in the parapet, as shown, are for up to 50° skews.

For skews greater than 50°, the anchor blocks and the elastomeric membrane, installed according to dimension "D", might require modifications to insure a minimum clearance of 40 mm from centerline of anchor studs to edge of parapet opening. The anchor blocks and the elastomeric membrane shall also be installed to the top of the parapet with the anchor studs spaced at ±300 cts.

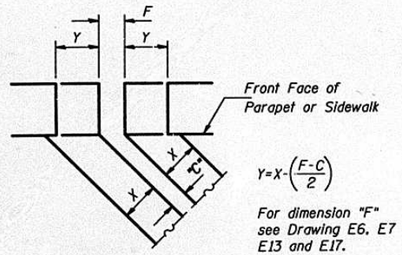

FORMING BLOCKOUT SKETCH

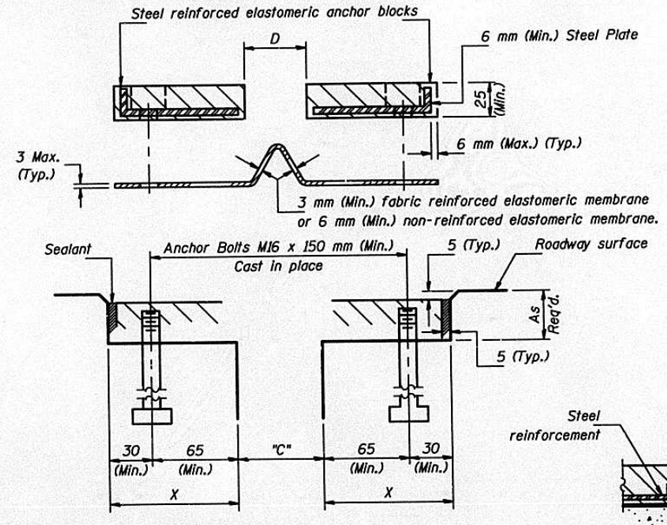

CROSS SECTION

GENERAL NOTES

Continuous Seal Neoprene Expansion Joint shall consist of molded anchor blocks of elastomer and steel, field assembled over continuous lengths of elastomeric membrane.

The elastomeric membrane shall be premolded with a single or a double upward convolution that will have a "memory" to return to its molded position upon joint closure.

The convolution length shall be such that the extended length will not be greater than the manufactured length when the joint is fully expanded in its design range and will not protrude above the anchor blocks when the joint is fully compressed.

Joint openings shall be adjusted according to Article 503.10(c) of the Standard Specifications when the deck is poured at an ambient temperature other than 10 °C.

The parapet and roadway membrane shall be made continuous by an approved vulcanizing process. Lapping will not be permitted.

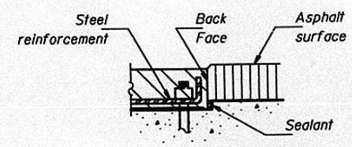

ANCHOR BLOCK WITH ASPHALT SURFACE

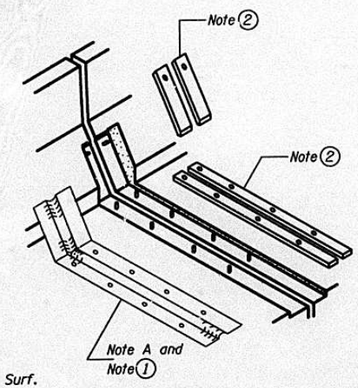

AT PARAPET

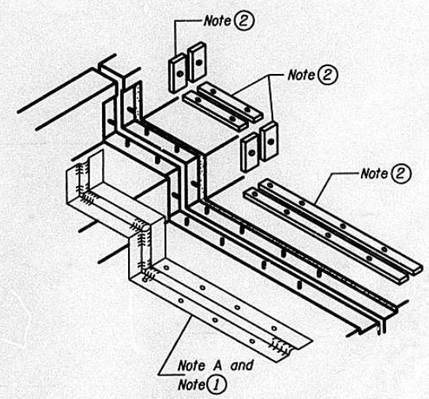

AT SIDEWALK OR MEDIAN

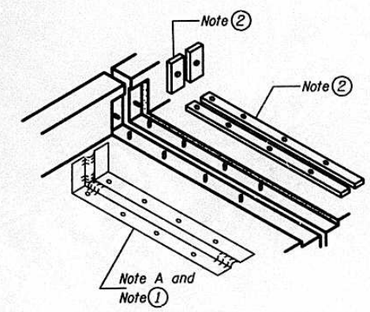

AT WALL

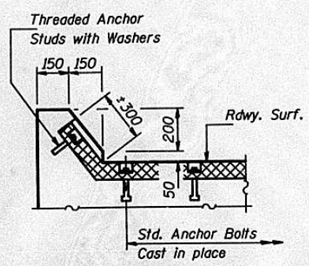

AT CURB

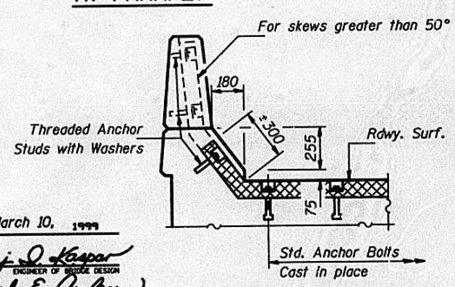

AT PARAPET

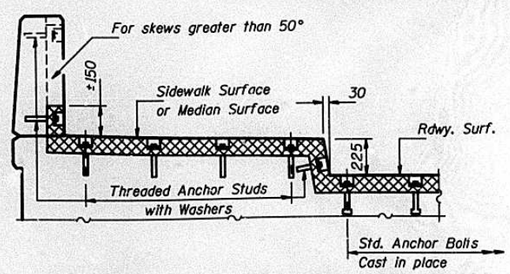

AT SIDEWALK OR MEDIAN

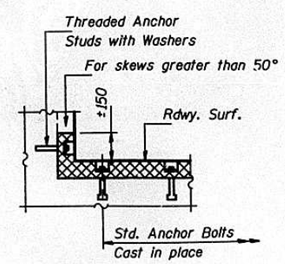

AT WALL

TYPICAL END TREATMENTS

DESIGNED	S. Moynihan
CHECKED	S.D. Gnann
DRAWN	John F. Schneller Jr.
CHECKED	S.E.M. S.D.G.

March 10, 1999
EXAMINED Raj. D. Kaspar ENGINEER OF BRIDGE DESIGN
PASSED Ralph E. Anderson ENGINEER OF BRIDGES AND STRUCTURES

EJ-CS (M) 4-30-97

CONTINUOUS SEAL TYPE NEOPRENE EXPANSION JOINTS
For 50, 65 and 100 Movement

F.A. ROUTE 317 SECTION 15B-I-8
PEORIA AND TAZEWELL COUNTIES
STATION 6+791.262

DWG. NO. E22

ROUTE NO.	SECTION	COUNTY	TOTAL SHEETS	SHEET NO.
F.A. 317	15B-1-8	PEORIA & TAZEWELL	303	196
FED. ROAD DIST. NO. 7	ILLINOIS	FED. AID PROJECT-		

SHEET NO.
SHEETS

STATE OF ILLINOIS
DEPARTMENT OF TRANSPORTATION

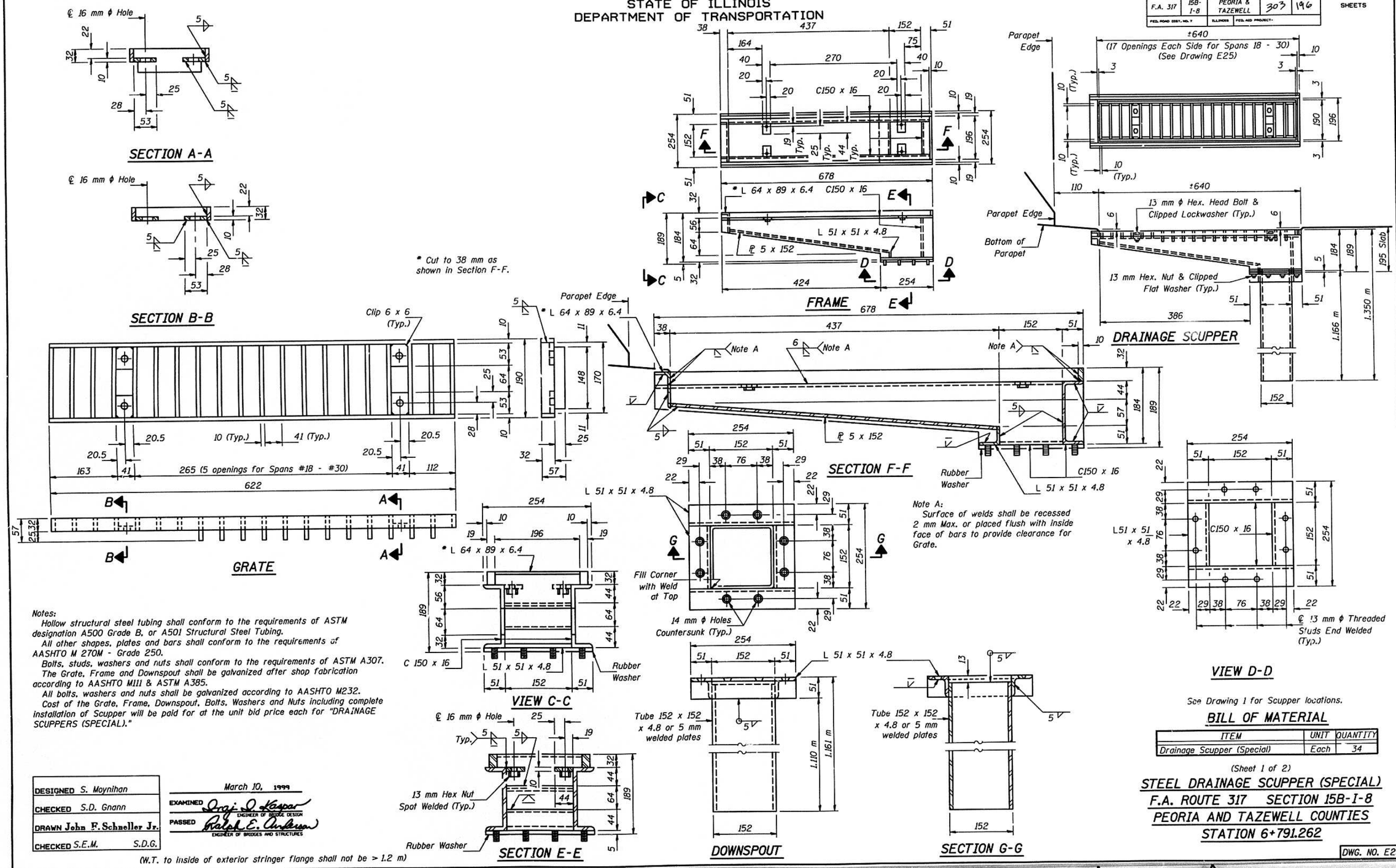

Notes:

Hollow structural steel tubing shall conform to the requirements of ASTM designation A500 Grade B, or A501 Structural Steel Tubing.

All other shapes, plates and bars shall conform to the requirements of AASHTO M 270M - Grade 250.

Bolts, studs, washers and nuts shall conform to the requirements of ASTM A307.

The Grate, Frame and Downspout shall be galvanized after shop fabrication according to AASHTO M111 & ASTM A385.

All bolts, washers and nuts shall be galvanized according to AASHTO M232.

Cost of the Grate, Frame, Downspout, Bolts, Washers and Nuts including complete installation of Scupper will be paid for at the unit bid price each for "DRAINAGE SCUPPERS (SPECIAL)."

See Drawing 1 for Scupper locations.

BILL OF MATERIAL

ITEM	UNIT	QUANTITY
Drainage Scupper (Special)	Each	34

(Sheet 1 of 2)

DESIGNED	S. Moynihan
CHECKED	S.D. Gnann
DRAWN	John F. Schneller Jr.
CHECKED	S.E.M. S.D.G.

March 10, 1999

EXAMINED Greg L. Kaspar — ENGINEER OF BRIDGE DESIGN

PASSED Ralph E. Anderson — ENGINEER OF BRIDGES AND STRUCTURES

STEEL DRAINAGE SCUPPER (SPECIAL)
F.A. ROUTE 317 SECTION 15B-I-8
PEORIA AND TAZEWELL COUNTIES
STATION 6+791.262

DWG. NO. E23

D C B A 0 A B C D

TAMERAN

STATE OF ILLINOIS
DEPARTMENT OF TRANSPORTATION

ROUTE NO.	SECTION	COUNTY	TOTAL SHEETS	SHEET NO.
F.A. 317	15B-1-8	PEORIA & TAZEWELL	303	197
FED. ROAD DIST. NO. 7	ILLINOIS	FED. AID PROJECT-		

SHEET NO.
SHEETS

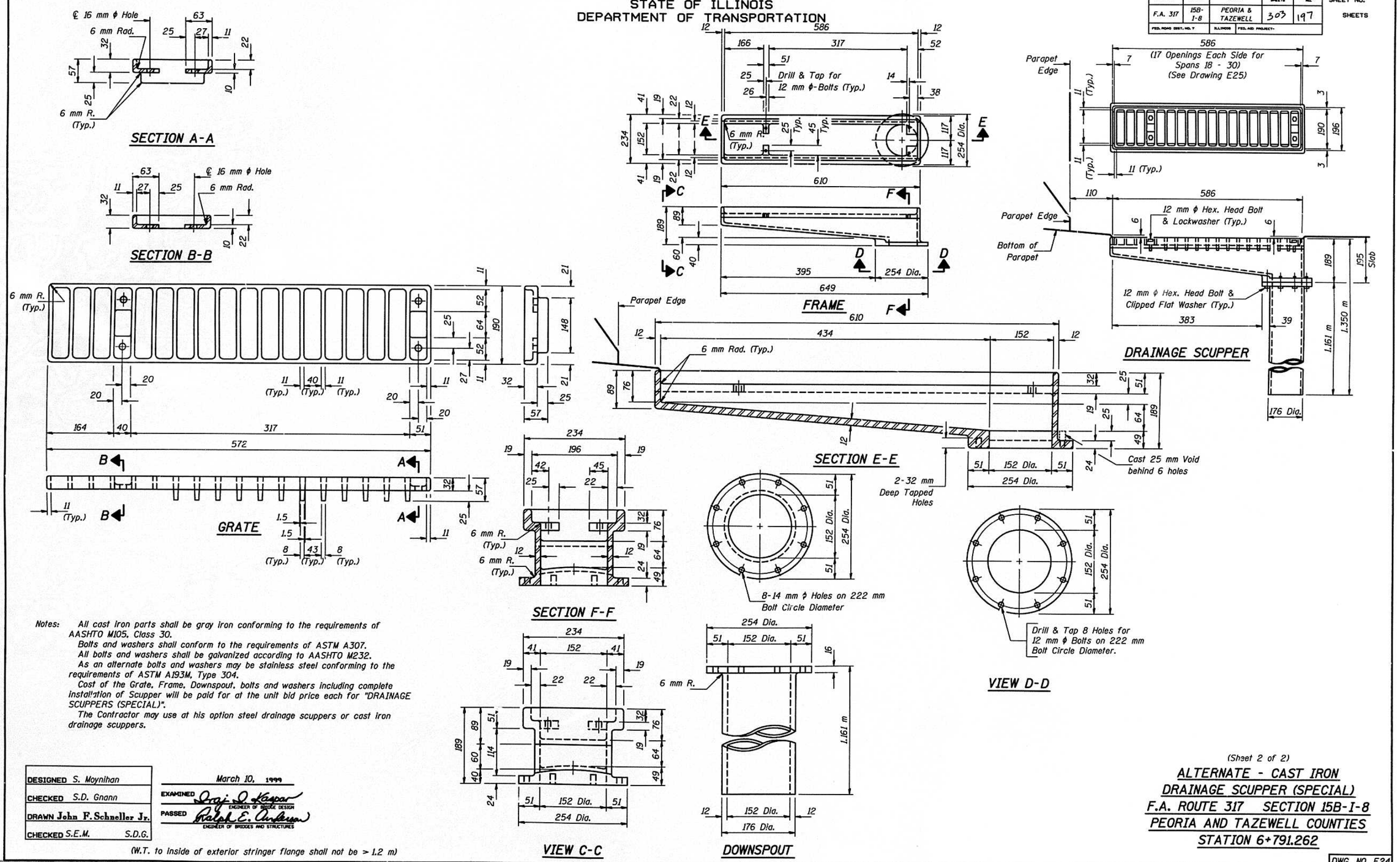

Notes: All cast iron parts shall be gray iron conforming to the requirements of AASHTO M105, Class 30.

Bolts and washers shall conform to the requirements of ASTM A307.

All bolts and washers shall be galvanized according to AASHTO M232.

As an alternate bolts and washers may be stainless steel conforming to the requirements of ASTM A193M, Type 304.

Cost of the Grate, Frame, Downspout, bolts and washers including complete installation of Scupper will be paid for at the unit bid price each for "DRAINAGE SCUPPERS (SPECIAL)".

The Contractor may use at his option steel drainage scuppers or cast iron drainage scuppers.

DESIGNED	S. Moynihan
CHECKED	S.D. Gnann
DRAWN	John F. Schneller Jr.
CHECKED	S.E.M. S.D.G.

March 10, 1999

EXAMINED Jaj J. Kaspar — ENGINEER OF BRIDGE DESIGN

PASSED Ralph E. Anderson — ENGINEER OF BRIDGES AND STRUCTURES

(W.T. to inside of exterior stringer flange shall not be > 1.2 m)

(Sheet 2 of 2)

ALTERNATE - CAST IRON DRAINAGE SCUPPER (SPECIAL)
F.A. ROUTE 317 SECTION 15B-1-8
PEORIA AND TAZEWELL COUNTIES
STATION 6+791.262

DWG. NO. E24

STATE OF ILLINOIS
DEPARTMENT OF TRANSPORTATION

ROUTE NO.	SECTION	COUNTY	TOTAL SHEETS	SHEET NO.
F.A. 317	15B-1-8	PEORIA & TAZEWELL	303	198.
FED. ROAD DIST. NO. 7	ILLINOIS	FED. AID PROJECT-		

SHEET NO.
SHEETS

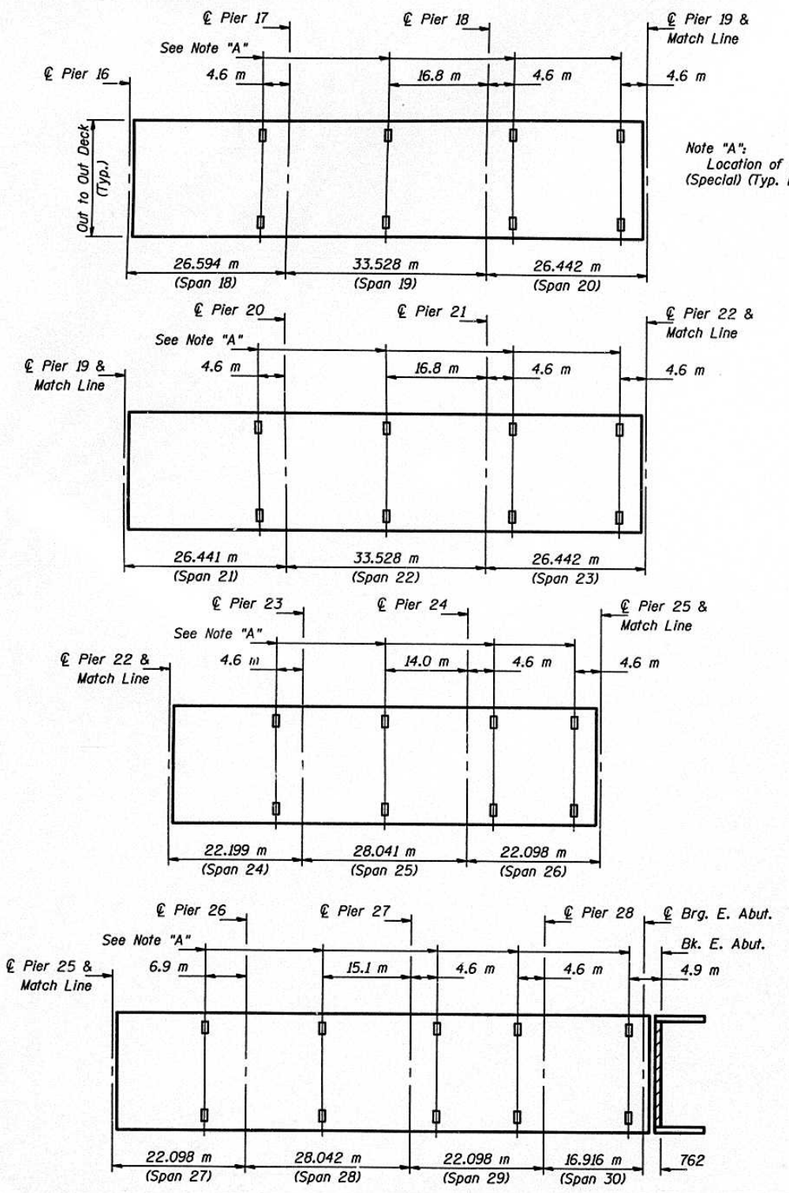

Note "A":
Location of Drainage Scuppers (Special) (Typ. Each Side of Deck).

N

LOCATION OF DRAINAGE SCUPPERS (SPECIAL) - SPANS 18 - 30

See Drawings E23 and E24 for details.

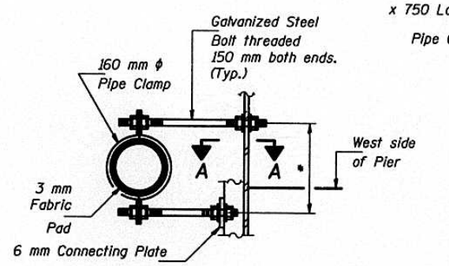

PIPE CLAMP DETAIL

* Dimension as required by Pipe Clamp.

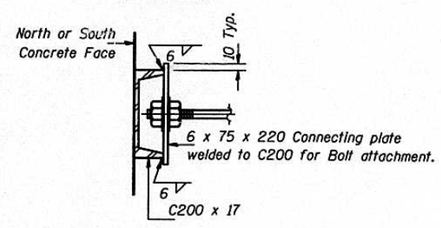

SECTION A-A

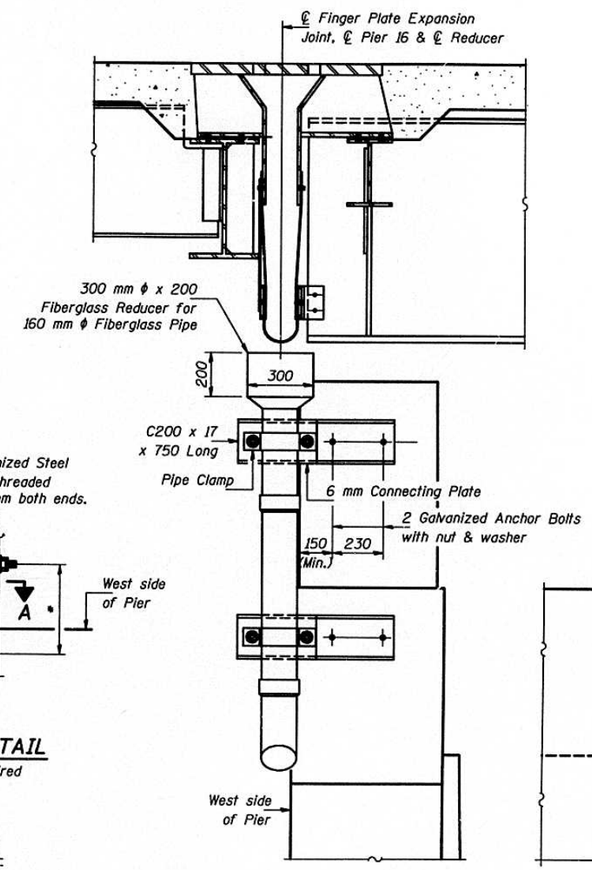

END VIEW

(Looking North)
South Face Similar

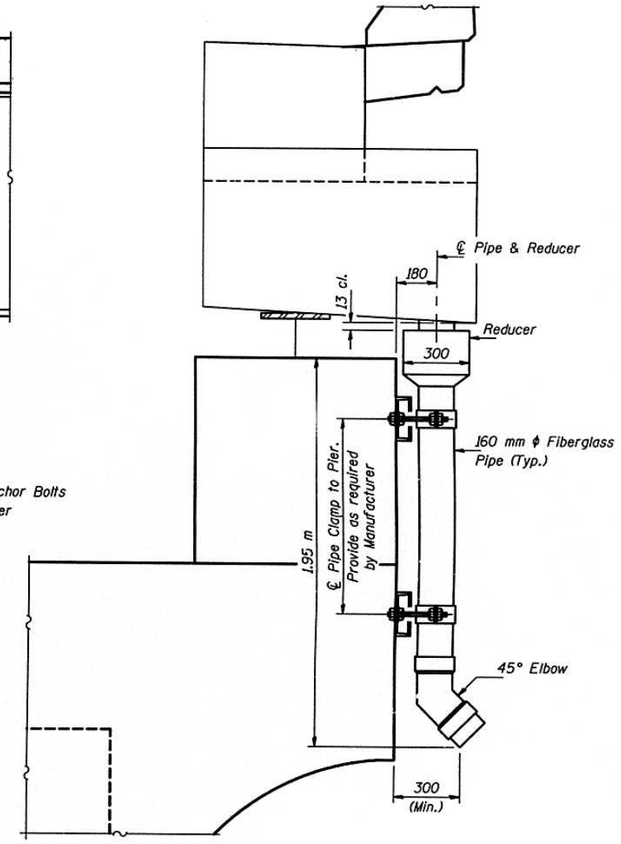

ELEVATION - PIER 16

(Typ. Each End)

Notes:

The exterior surfaces of the furnished Fiberglass Pipe shall be coated or pigmented by the manufacturer with a color that matches the color of concrete.

Fiberglass Pipe shall conform to ASTM D2996, with short-time rupture strength hoop tensile stress of 200 MPa minimum. The surface of the Fiberglass Pipe shall be free of bond inhibiting agents.

The Clamping Device and inserts shall be galvanized according to AASHTO M-232. Space Pipe Clamp to miss reinforcement.

The cost of Pipe, Elbows, Reducers, Clamps, Anchor Bolts and other attachment hardware, Fabric Pad and Installation is included with "Drainage System" on Set "D".

DESIGNED	S. Moynihan S.D. Gnann
CHECKED	J. Klein
DRAWN	John F. Schneiler Jr.
CHECKED	S.D.G. S.E.M. J.K.K.

March 10, 1999

EXAMINED Graj D. Kaspar
ENGINEER OF BRIDGE DESIGN

PASSED Ralph E. Anderson
ENGINEER OF BRIDGES AND STRUCTURES

SCUPPER LOCATIONS - SPANS 18 - 30 & DRAINAGE SYSTEM - PIER 16
F.A. ROUTE 317 SECTION 15B-1-8
PEORIA AND TAZEWELL COUNTIES
STATION 6+791.262

DWG. NO. E25

STATE OF ILLINOIS
DEPARTMENT OF TRANSPORTATION

ROUTE NO.	SECTION	COUNTY	TOTAL SHEETS	SHEET NO.
F.A. 317	15C-1-8	PEORIA & TAZEWELL	303	199
FED. ROAD DIST. NO. 7	ILLINOIS	FED. AID PROJECT-		

SHEET NO.
SHEETS

GENERAL NOTES

Fasteners shall be high strength bolts. Bolts M22, open holes 24 mm ϕ, unless otherwise noted.

Field welding will be permitted only when approved by the Engineer.

Anchor bolts for Spans 18 thru 30 shall be set before bolting diaphragms over supports.

Reinforcement bars shall conform to the requirements of AASHTO M 31M, M 42M or M 53M Grade 400.

Plan dimensions and details relative to existing structure have been taken from existing plans and are subject to nominal construction variations. It shall be the Contractor's responsibility to verify such dimensions and details in the field and make necessary approved adjustments prior to construction or ordering of materials. Such variations shall not be cause for additional compensation for a change in the scope of the work, however, the Contractor will be paid for the quantity actually furnished at the unit price bid for the work.

Layout of Slope Protection System may be varied in the field to suit ground conditions as directed by the Engineer.

All dimensions are in millimeters (mm) unless otherwise noted.

Repairs shown in the plans are based on the "Bridge Condition Report" and Field Investigations. The Engineer may determine during construction that modifications or additions to these repairs are necessary. Any such modifications or additions shall be approved by the Engineer and shall be paid for at the same rate as the unit price bid for the particular item.

Bearing seat surfaces shall be constructed or adjusted to the designated elevations within a tolerance of 3 mm. Adjustment shall be made either by grinding the surface or by shimming the bearing. Two 3 mm adjusting shims, of the dimensions of the bottom bearing plate, shall be provided for each bearing in addition to all other plates or shims. For Type I Elastomeric Bearings, shims shall be provided and placed as detailed.

The Link Plates for the Wind Anchorage Assembly are subject to tensile stress and shall conform to the Supplemental Requirements for Notch Toughness Zone 2.

The existing structural steel coating contains lead. The Contractor should take appropriate precautions to deal with the presence of lead on this project.

The inorganic zinc rich primer / Acrylic / Acrylic Paint System shall be used for shop and field painting of new structural steel except where otherwise noted. The color of the final finish coat shall be Blue, Munsell No. 10B 3/6. See Special Provision "Cleaning and Painting New Metal Structures".

Cleaning and painting of structural steel in all truss bearings that are to be reused shall be as specified in the Special Provision for "Cleaning and Painting Existing Steel Structures". The existing structural steel shall be cleaned by Method 1. The aluminum epoxy mastic / acrylic paint system shall be used for painting of the existing structural steel. The color of the final finish coat shall be Blue, Munsell 10B 3/6.

BILL OF MATERIAL

ITEM	UNIT	"F"
Bituminous Concrete Removal (Deck)	m2	—
Deck Slab Repair (Partial)	m2	—
Deck Slab Repair (Full Depth Type I)	m2	—
Deck Slab Repair (Full Depth Type II)	m2	—
Bridge Deck Scarification 20 mm	m2	—
Bridge Deck Scarification 50 mm	m2	—
Bridge Deck Concrete Overlay Option	m2	—
Removal of Existing Concrete Deck	L.S.	—
Removal of Existing Superstructures	Each	—
Structural Steel Removal	kg	12,820
Bridge Handrail Removal	m	—
Concrete Superstructure	m3	3.4
Reinforcement Bars, Epoxy Coated	kg	18,130
Drainage Scuppers (Special)	Each	—
Floor Drains	Each	—
Drainage System	L.S.	—
Bridge Deck Grooving	m2	—
Protective Coat	m2	—
Name Plates	Each	1
Aluminum Parapet	m	—
Modular Expansion Joint 320 mm	m	—
Modular Expansion Joint 400 mm	m	—
Silicone Joint Sealer 25 mm	m	—
Preformed Joint Seal 45 mm	m	—
Preformed Joint Seal 102 mm	m	—
Neoprene Expansion Joint 100 mm	m	—
Reinforced Neoprene Expansion Joint Treatment	m	—
Structural Steel Repair	kg	—
Furnishing & Erecting Structural Steel	L.S.	0.01
Stud Shear Connectors	Each	—
Rivet Removal & Replacement	Each	—
Field Measurements	L.S.	*
Remove and Reinstall Bearings	Each	7
Elastomeric Bearing Assembly Type II (Modified)	Each	—
Elastomeric Bearing Assembly Type I	Each	36
Elastomeric Bearing Assembly Type II	Each	23
Floating Bearings, Guided Expansion, 1000 kN	Each	2
Floating Bearings, Guided Expansion, 1500 kN	Each	4
Floating Bearings, Guided Expansion, 10000 kN	Each	2
Wind Anchorage Assembly Replacement	Each	4
Cleaning and Painting Steel Bridge	L.S.	*
Power Tool Cleaning Residue Containment and Disposal	L.S.	*
Blasting Residue Containment and Disposal	L.S.	*
Temporary Support System	Each	7
Jacking and Cribbing	Each	15
Structure Excavation	m3	38
Concrete Removal	m3	201.8
Concrete Structures	m3	240.8
Formed Concrete Repair (Depth Equal To or Less Than 125 mm)	m2	213
Formed Concrete Repair (Depth Greater Than 125 mm)	m2	19
Epoxy Crack Sealing	m	38.2
Bridge Seat Sealer	m2	87
Stone Riprap Class A4	m2	31
Filter Fabric For Use With Riprap	m2	31
Furnishing Steel Piles HP310 x 94	m	47
Driving Steel Piles	m	47

Calculated Mass of Structural Steel	UNIT	"F"
AASHTO M 270M, Grade 250	kg	14,580
AASHTO M 270M, Grade 345	kg	—

DRAWING SET INDEX

DRAWING	TITLE
1	General Plan and Elevation
2	Total Bill of Material and Ramp "E" Data
3	Total Index of Drawings
4	Construction Sequence
A1 - A28	Set "A" - Ramp "E" (Spans 3E - 10E)
B1 - B36	Set "B" - Deck Truss (Spans 6 - 11)
C1 - C57	Set "C" - Thru Truss (Spans 12 - 14)
D1 - D21	Set "D" - Deck Truss (Spans 15 - 17)
E1 - E25	Set "E" - East Approach (Spans 18 - 30)
F1 - F76	Set "F" - Substructure (Pier 4 - East Abutment)

INDEX FOR SET "F" SUBSTRUCTURE (PIER 4 - EAST ABUTMENT)

DRAWING	TITLE
F1	General Notes, Bill of Material and Index of Drawings for Substructure (Pier 4 - East Abutment)
F2	Stone Riprap Details at East Abutment
F3	Temporary Support System - Pier 4
F4 - F5	Temporary Support System - Pier 5
F6 - F7	Temporary Support System - Pier 10
F8 - F9	Temporary Support System - Pier 11
F10 - F11	Temporary Support System - Pier 12
F12 - F13	Temporary Support System - Pier 13
F14	Temporary Support System - Pier 16
F15	Wind Anchorage Assembly - Piers 10 & 13 (Thru Truss)
F16	Bearing Removal - Piers 4 (East), 10 (West), 11 & 16 (West)
F17	Bearing Removal and Reinstallation - Pier 5
F18	Bearing Removal and Reinstallation - Piers 10 (East) and 13 (West)
F19	Bearing Removal and Reinstallation - Pier 12
F20	Bearing Details - Piers 4 (East) & 10 (West)
F21	Bearing Details - Pier 11
F22	Bearing Details - Pier 16 (West)
F23	Bearing Details - Piers 16 (East), 17, 19 (East) & 20
F24	Bearing Details - Piers 18, 19 (West), 21, & 22 (West)
F25	Bearing Details - Piers 22 (East), 23, 25 (East) & 26
F26	Bearing Details - Piers 24, 25 (West) & 27
F27	Bearing Details - Pier 28
F28	Bearing Details - East Abutment
F29	Anchor Bolt Details
F30	Concrete Removal and Repair - Pier 4
F31	Concrete Removal and Repair - Pier 5
F32	Concrete Removal and Repair - Pier 6
F33	Concrete Removal and Repair - Pier 7
F34	Concrete Removal and Repair - Pier 9
F35	Concrete Removal and Repair - Pier 10
F36	Concrete Removal and Repair - Pier 11
F37	Concrete Removal and Repair - Pier 12
F38	Concrete Removal and Repair - Pier 13
F39	Concrete Removal and Repair - Pier 14
F40	Concrete Removal and Repair - Pier 15
F41	Concrete Removal and Repair - Pier 16
F42	Concrete Removal and Repair - Piers 18 & 19
F43	Concrete Removal and Repair - Piers 20 & 21
F44	Concrete Removal and Repair - Piers 22 & 23
F45	Concrete Removal and Repair - Piers 24 & 25
F46	Concrete Removal and Repair - Piers 26 & 27
F47	Concrete Removal and Repair - Pier 28
F48	Concrete Removal - East Abutment
F49	Pier 4
F50	Pier 5
F51 - F52	Pier 10
F53	Pier 12
F54 - F55	Pier 13
F56 - F57	Pier 16
F58	Pier 17
F59	Pier 18
F60 - F61	Pier 19
F62	Pier 20
F63	Pier 21
F64 - F66	Pier 22
F67	Pier 23
F68	Pier 24
F69 - F70	Pier 25
F71	Pier 26
F72	Pier 27
F73	Pier 28
F74 - F76	East Abutment

* Included with Sets "A" thru "E".

DESIGNED S. Moynihan	March 10, 1999
CHECKED D. Verhulst	EXAMINED Raj. S. Kaspar, ENGINEER OF BRIDGE DESIGN
DRAWN John F. Schneller Jr.	PASSED Ralph E. Anderson, ENGINEER OF BRIDGES AND STRUCTURES
CHECKED S.E.M. D.G.V.	

McCLUGAGE BRIDGE (E.B.)
U.S. 150 AND U.S. 24 OVER
THE ILLINOIS RIVER
F.A. ROUTE 317 SECTION 15B-I-8
PEORIA AND TAZEWELL COUNTIES
STATION 6+791.262
STRUCTURE NO. 090-0070 (E.B.)

DWG. NO. F1

STATE OF ILLINOIS
DEPARTMENT OF TRANSPORTATION

ROUTE NO.	SECTION	COUNTY	TOTAL SHEETS	SHEET NO.
F.A. 317	15B-1-8	PEORIA & TAZEWELL	307	200
FED. ROAD DIST. NO. 7	ILLINOIS	FED. AID PROJECT-		

SHEET NO.
SHEETS

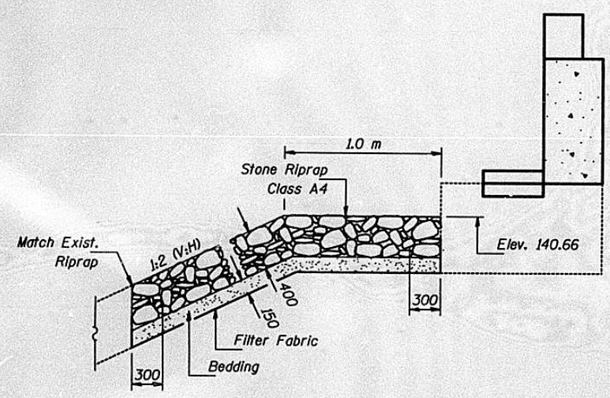

SECTION THRU ABUTMENT

Note:
Use sand backfill to fill in portions under Abutment that are undermined. Cost included with "Stone Riprap Class A4".

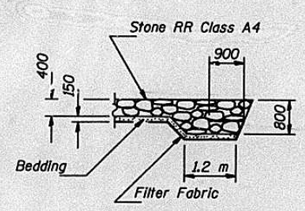

SECTION A-A

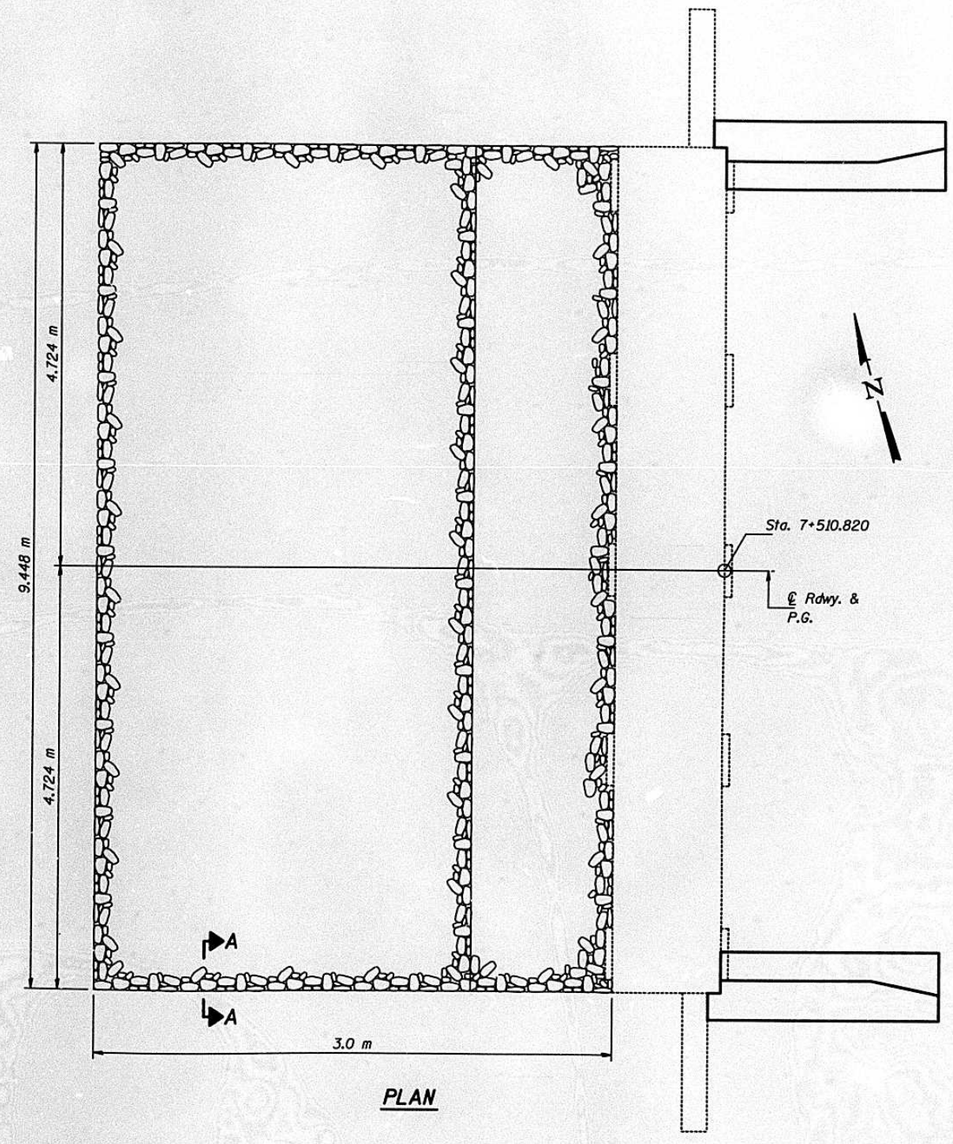

PLAN

DESIGNED	D. Verhulst
CHECKED	S.D. Gnann
DRAWN	John F. Schneller Jr.
CHECKED	D.G.V. S.D.G.

March 10, 1999
EXAMINED Raj. S. Kaspar ENGINEER OF BRIDGE DESIGN
PASSED Ralph E. Anderson ENGINEER OF BRIDGES AND STRUCTURES

STONE RIPRAP DETAILS
AT EAST ABUTMENT
F.A. ROUTE 317 SECTION 15B-1-8
PEORIA AND TAZEWELL COUNTIES
STATION 6+791.262

DWG. NO. F2

STATE OF ILLINOIS
DEPARTMENT OF TRANSPORTATION

ROUTE NO.	SECTION	COUNTY	TOTAL SHEETS	SHEET NO.
F.A. 317	15B-1-8	PEORIA & TAZEWELL	303	201
FED. ROAD DIST. NO. 7	ILLINOIS	FED. AID PROJECT-		

SHEET NO.
SHEETS

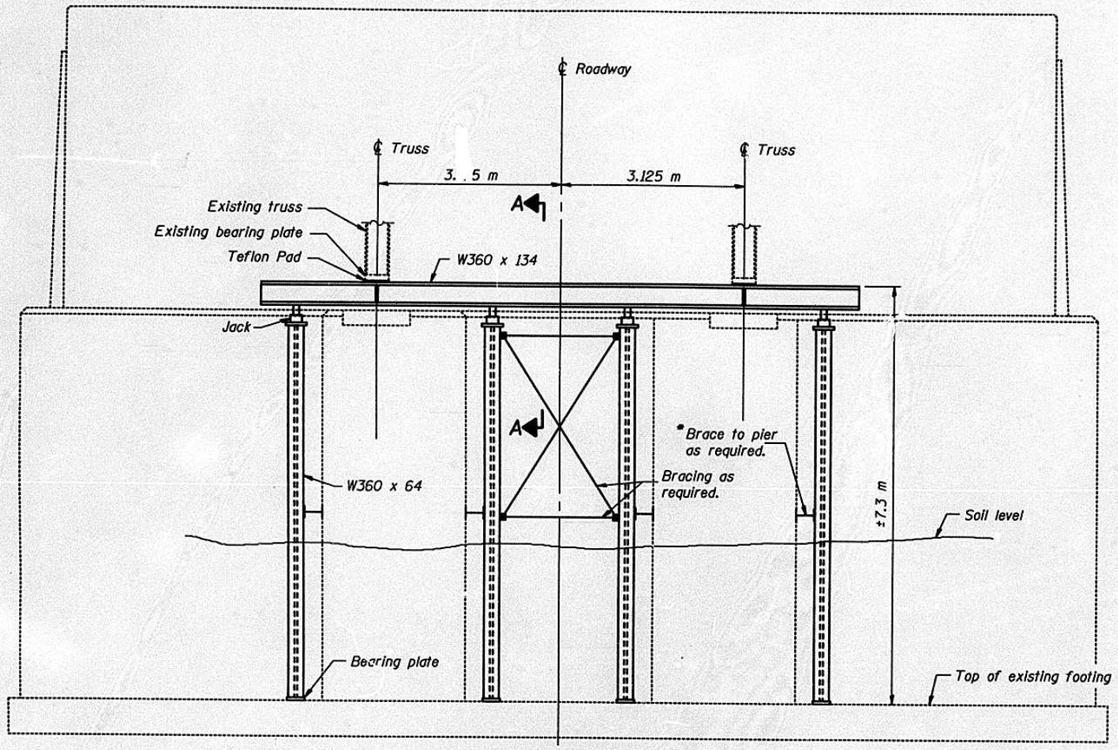

ELEVATION
(Looking West)

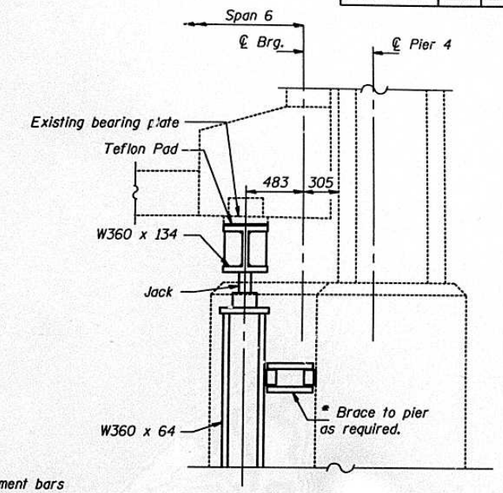

* Existing reinforcement bars shall be located, and anchors placed to miss them.

SECTION A-A

LOADS PER BEARING

Dead Load Vertical	316 kN
Wind Load Vertical	±94 kN
Wind Load Transverse	±66 kN

NOTES

1. Repairs to Pier 5 shall be finished and truss set back down on reinstalled bearings before Pier 4 is supported on its temporary support.
2. Existing concrete deck from Spans 6 thru 8 shall be removed before beginning jacking and cribbing for Pier 4. No form work for new concrete deck shall be placed until the trusses are set on new or reinstalled bearings.
3. The temporary support system, jacks and cribbing are conceptually shown for bidding purposes only. The member sizes shown are estimated. Additional members not shown may be required. A complete design, signed and sealed by an Illinois Licensed Structural Engineer shall be submitted to the Department by the Contractor for approval.
4. The temporary support system, jacks and cribbing shall be designed to transfer the vertical and horizontal loads shown in the table to the pier. Cribbing must provide for thermal effects.
5. The members selected for the temporary support system, jacks and cribbing shall provide adequate clearance to perform the work on the pier and bearings.
6. The truss shall be raised a maximum of 3 mm. All jacks shall be raised and lowered simultaneously.
7. All steel shown is included with "Temporary Support System".
8. Cost of any excavation required to set the steel columns on top of the existing footing shall be included with "Temporary Support System".
9. The jacks shall have a minimum capacity of $1\frac{1}{2}$ times the tabulated loads.

BILL OF MATERIAL

ITEM	UNIT	TOTAL
Temporary Support System	Each	1
Jacking and Cribbing	Each	2

DESIGNED	Steve Negangard
CHECKED	S. Moynihan
DRAWN	John F. Schneller Jr.
CHECKED	S.P.N. S.E.M.

March 10, 1999
EXAMINED Jaj J. Kaspar ENGINEER OF BRIDGE DESIGN
PASSED Ralph E. Anderson ENGINEER OF BRIDGES AND STRUCTURES

TEMPORARY SUPPORT SYSTEM
PIER 4
F.A. ROUTE 317 SECTION 15B-1-8
PEORIA AND TAZEWELL COUNTIES
STATION 6+791.262

DWG. NO. F3

TAMERAN

STATE OF ILLINOIS
DEPARTMENT OF TRANSPORTATION

ROUTE NO.	SECTION	COUNTY	TOTAL SHEETS	SHEET NO.
F.A. 317	15B-1-8	PEORIA & TAZEWELL	303	202
FED. ROAD DIST. NO. 7	ILLINOIS	FED. AID PROJECT-		

SHEET NO.
SHEETS

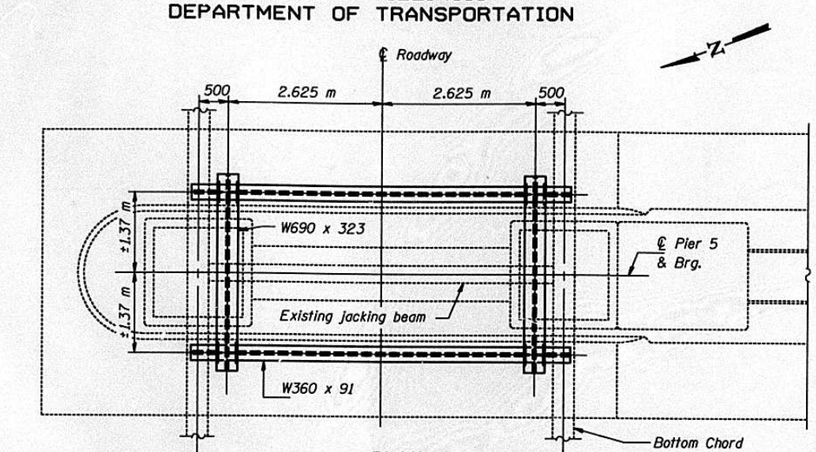

PLAN

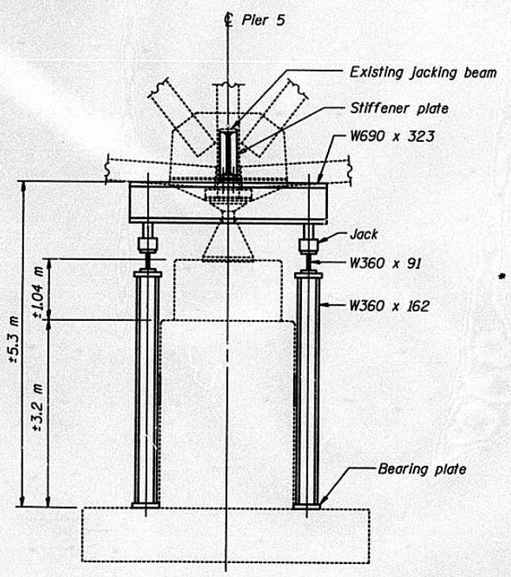

SECTION A - A

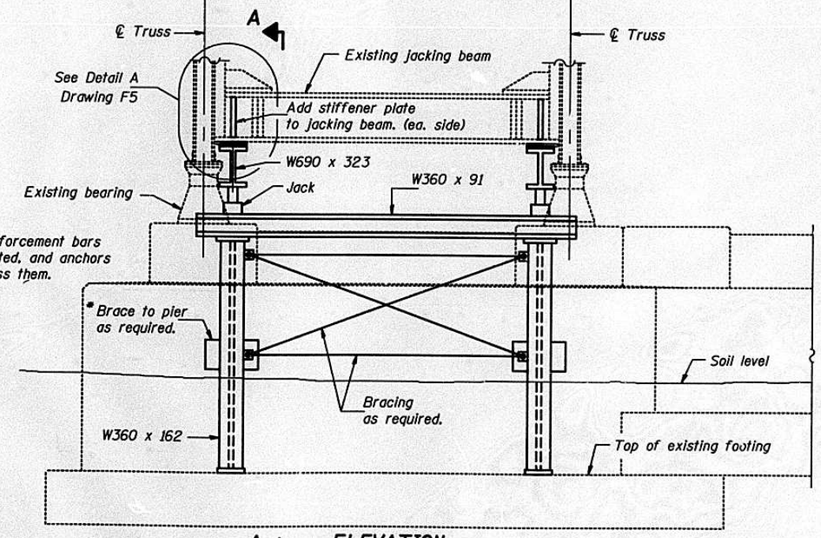

ELEVATION
(Looking East)

LOADS PER BEARING

Dead Load Vertical	1157 kN
Wind Load Vertical	±556 kN
Wind Load Transverse	±227 kN
Wind Load Longitudinal	±426 kN

BILL OF MATERIAL

ITEM	UNIT	TOTAL
Temporary Support System	Each	1
Jacking and Cribbing	Each	2

DESIGNED Steve Negangard	March 10, 1999
CHECKED S. Moynihan	EXAMINED Greg J. Kaspar ENGINEER OF BRIDGE DESIGN
DRAWN John F. Schneller Jr.	PASSED Ralph E. Anderson ENGINEER OF BRIDGES AND STRUCTURES
CHECKED S.P.N. S.E.M.	

TEMPORARY SUPPORT SYSTEM
PIER 5
F.A. ROUTE 317 SECTION 15B-1-8
PEORIA AND TAZEWELL COUNTIES
STATION 6+791.262

DWG. NO. F4

STATE OF ILLINOIS
DEPARTMENT OF TRANSPORTATION

ROUTE NO.	SECTION	COUNTY	TOTAL SHEETS	SHEET NO.
F.A. 317	15B-1-8	PEORIA & TAZEWELL	303	203
FED. ROAD DIST. NO. 7	ILLINOIS	FED. AID PROJECT-		

SHEET NO.
SHEETS

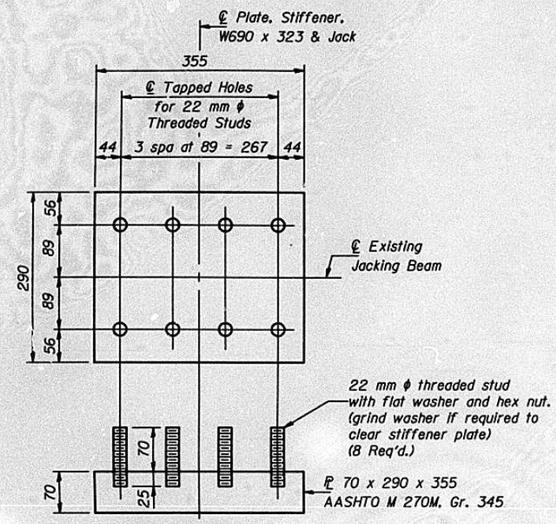

PLATE DETAIL

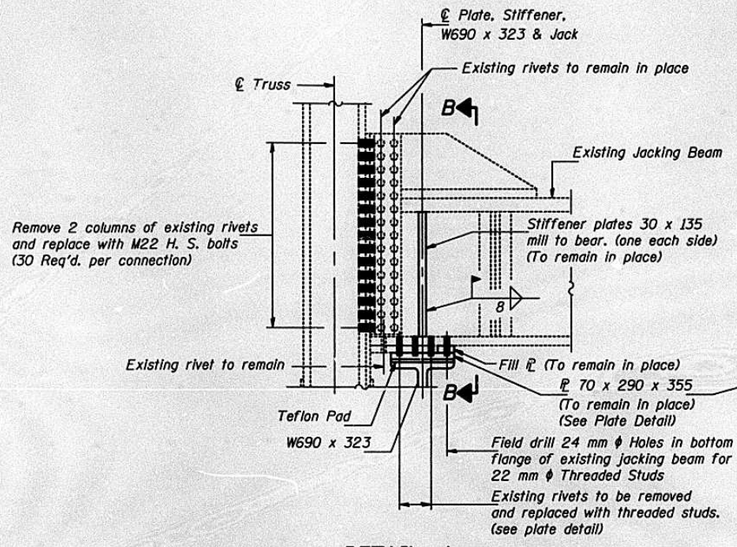

DETAIL A

All work shown is included with "Temporary Support System"

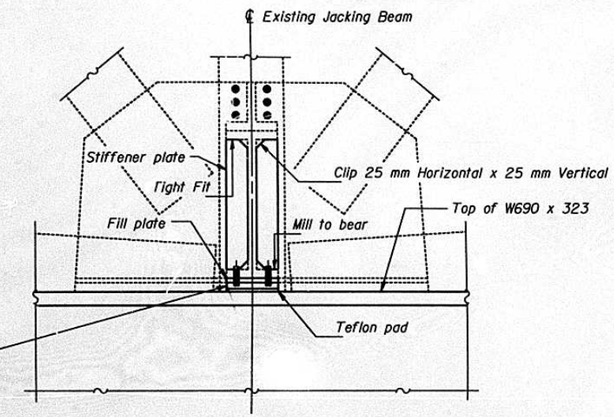

SECTION B - B

NOTES

1. Remove rivets one at a time and replace with M22 H.S. Bolts as shown before jacking truss.
2. Existing Pier 4 bearings shall be modified to resist the longitudinal wind loads shown for Pier 5 before jacking at Pier 5. Cost is included with "Temporary Support System". A complete design, signed and sealed by an Illinois Licensed Structural Engineer shall be submitted to the Department by the Contractor for approval.
3. Existing concrete deck from Spans 6 thru 8 shall be removed before beginning jacking and cribbing for Pier 5. No form work for new concrete deck shall be placed until the trusses are set on new or reinstalled bearings.
4. The temporary support system, jacks and cribbing are conceptually shown for bidding purposes only. The member sizes shown are estimated. Additional members not shown may be required. A complete design, signed and sealed by an Illinois Licensed Structural Engineer shall be submitted to the Department by the Contractor for approval.
5. The temporary support system, jacks and cribbing shall be designed to transfer the vertical and horizontal loads shown in the table on Drawing F4 to the pier. Cribbing must provide for thermal effects.
6. The members selected for the temporary support system, jacks and cribbing shall provide adequate clearance to perform the work on the pier and bearings.
7. The truss shall be raised a maximum of 3 mm. All jacks shall be raised and lowered simultaneously.
8. All steel shown is included with "Temporary Support System".
9. Cost of any excavation required to set the steel columns on top of the existing footing shall be included with "Temporary Support System".
10. The jacks shall have a minimum capacity of $1\frac{1}{2}$ times the tabulated loads.

DESIGNED	Steve Negangard
CHECKED	S. Moynihan
DRAWN	John F. Schneller Jr.
CHECKED	S.P.N. S.E.M.

March 10, 1999
EXAMINED Jorge D. Kaspar ENGINEER OF BRIDGE DESIGN
PASSED Ralph E. Anderson ENGINEER OF BRIDGES AND STRUCTURES

TEMPORARY SUPPORT SYSTEM DETAILS
PIER 5
F.A. ROUTE 317 SECTION 15B-I-8
PEORIA AND TAZEWELL COUNTIES
STATION 6+791.262

DWG. NO. F5

ROUTE NO.	SECTION	COUNTY	TOTAL SHEETS	SHEET NO.
F.A. 317	15B-I-8	PEORIA & TAZEWELL	303	304
FED. ROAD DIST. NO. 7	ILLINOIS	FED. AID PROJECT-		

SHEET NO.
SHEETS

STATE OF ILLINOIS
DEPARTMENT OF TRANSPORTATION

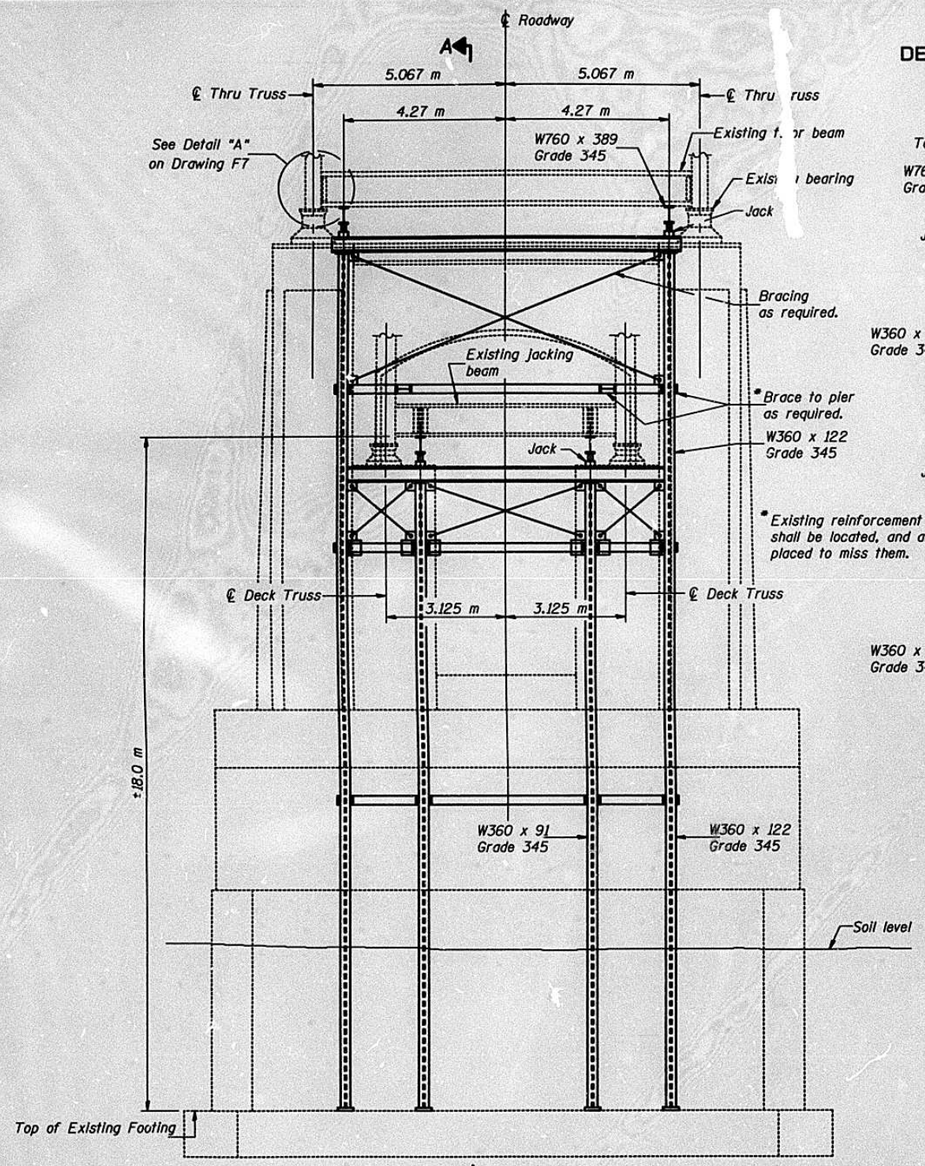

ELEVATION
(Looking East)

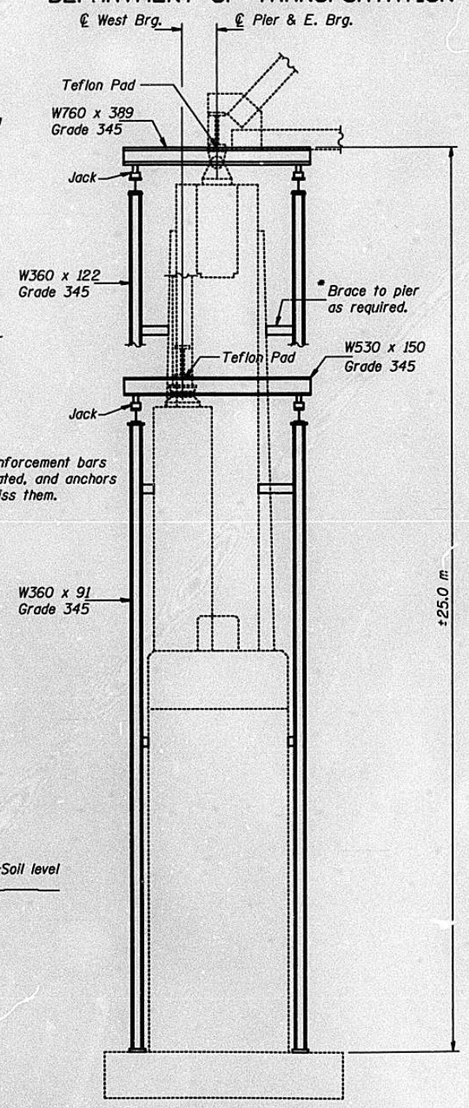

SECTION A-A

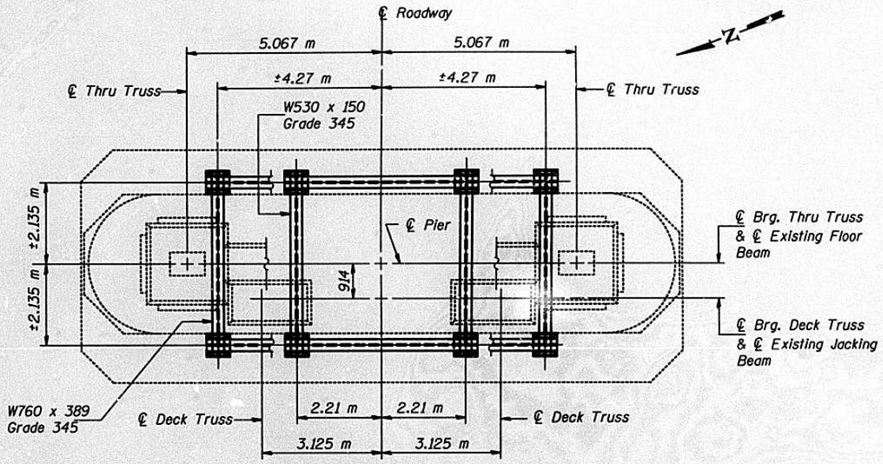

PLAN

BILL OF MATERIAL

ITEM	UNIT	TOTAL
Temporary Support System	Each	1
Jacking and Cribbing	Each	4

LOADS PER BEARING
WEST SIDE (DECK TRUSS)

Dead Load Vertical	316 kN
Wind Load Vertical	±94 kN
Wind Load Transverse	±66 kN

LOADS PER BEARING
EAST SIDE (THRU TRUSS)

Dead Load Vertical	1104 kN
Wind Load Vertical	±267 kN
Wind Load Transverse	±227 kN

DESIGNED	Steve Negangard
CHECKED	S. Moynihan
DRAWN	John F. Schueller Jr.
CHECKED	S.P.N. S.E.M.

March 10, 1999
EXAMINED Greg J. Kasper ENGINEER OF BRIDGE DESIGN
PASSED Ralph E. Anderson ENGINEER OF BRIDGES AND STRUCTURES

TEMPORARY SUPPORT SYSTEM
PIER 10
F.A. ROUTE 317 SECTION 15B-I-8
PEORIA AND TAZEWELL COUNTIES
STATION 6+791.262

DWG. NO. F6

STATE OF ILLINOIS
DEPARTMENT OF TRANSPORTATION

ROUTE NO.	SECTION	COUNTY	TOTAL SHEETS	SHEET NO.
F.A. 317	15B-1-8	PEORIA & TAZEWELL	303	205
FED. ROAD DIST. NO. 7	ILLINOIS	FED. AID PROJECT-		

SHEET NO.
SHEETS

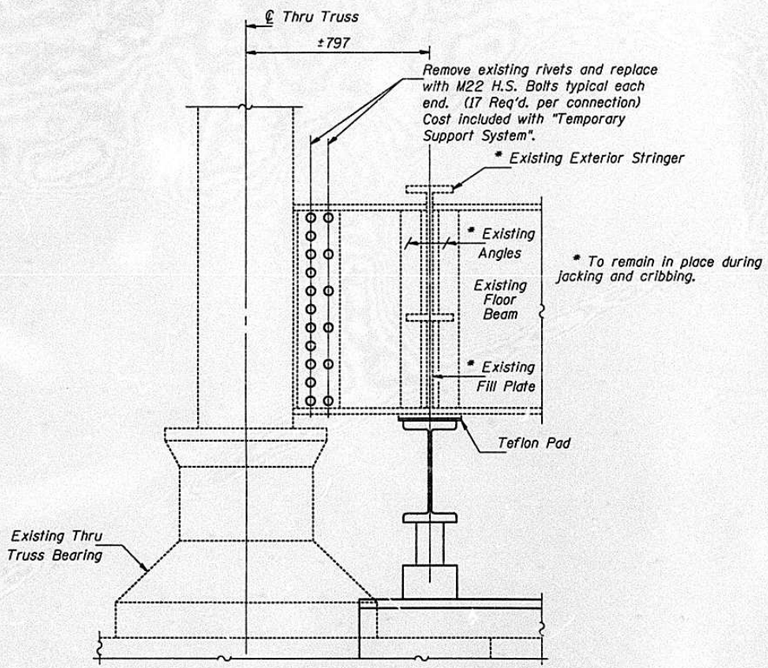

DETAIL "A"

NOTES

1. Remove rivets one at a time and replace with M22 H.S. Bolts as shown before jacking truss.
2. Existing concrete deck from Spans 9 thru 11 shall be removed before beginning jacking and cribbing for the deck truss at Pier 10. Existing concrete deck from Spans 12 thru 14 shall be removed before beginning jacking and cribbing for the thru truss at Pier 10. No form work for new concrete deck shall be placed until that truss has been set on new or reinstalled bearings.
3. The temporary support system, jacks and cribbing are conceptually shown for bidding purposes only. The member sizes shown are estimated. Additional members not shown may be required. A complete design, signed and sealed by an Illinois Licensed Structural Engineer shall be submitted to the Department by the Contractor for approval.
4. The temporary support system, jacks and cribbing shall be designed to transfer the vertical and horizontal loads shown in the table on Drawing F6 to the pier. Cribbing must provide for thermal effects.
5. The members selected for the temporary support system, jacks and cribbing shall provide adequate clearance to perform the work on the pier and bearings.
6. The truss shall be raised a maximum of 3 mm. All jacks for the deck truss at this pier shall be raised and lowered simultaneously. All jacks for the thru truss at this pier shall be raised and lowered simultaneously.
7. All steel shown is included with "Temporary Support System".
8. Cost of any excavation required to set the steel columns on top of the existing footing shall be included with "Temporary Support System".
9. The jacks shall have a minimum capacity of $1\frac{1}{2}$ times the tabulated loads.

DESIGNED	Steve Negangard
CHECKED	S. Moynihan
DRAWN	John F. Schneller Jr.
CHECKED	S.P.N. S.E.M.

March 10, 1999
EXAMINED Engineer of Bridge Design
PASSED Engineer of Bridges and Structures

TEMPORARY SUPPORT SYSTEM DETAILS
PIER 10
F.A. ROUTE 317 SECTION 15B-1-8
PEORIA AND TAZEWELL COUNTIES
STATION 6+791.262

DWG. NO. F7

STATE OF ILLINOIS
DEPARTMENT OF TRANSPORTATION

ROUTE NO.	SECTION	COUNTY	TOTAL SHEETS	SHEET NO.
F.A. 317	15B-1-8	PEORIA & TAZEWELL	303	205
FED. ROAD DIST. NO. 7	ILLINOIS	FED. AID PROJECT-		

SHEET NO.
SHEETS

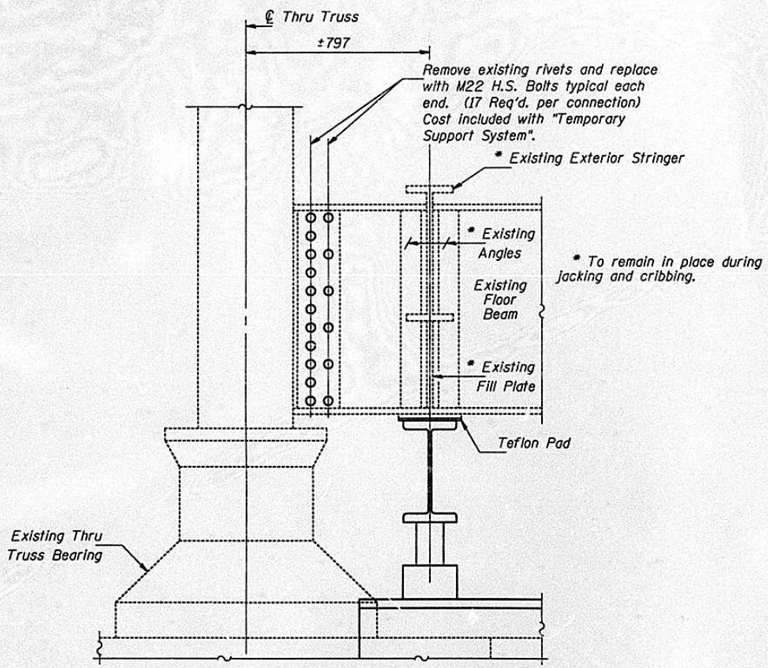

DETAIL "A"

NOTES

1. Remove rivets one at a time and replace with M22 H.S. Bolts as shown before jacking truss.
2. Existing concrete deck from Spans 9 thru 11 shall be removed before beginning jacking and cribbing for the deck truss at Pier 10. Existing concrete deck from Spans 12 thru 14 shall be removed before beginning jacking and cribbing for the thru truss at Pier 10. No form work for new concrete deck shall be placed until that truss has been set on new or reinstalled bearings.
3. The temporary support system, jacks and cribbing are conceptually shown for bidding purposes only. The member sizes shown are estimated. Additional members not shown may be required. A complete design, signed and sealed by an Illinois Licensed Structural Engineer shall be submitted to the Department by the Contractor for approval.
4. The temporary support system, jacks and cribbing shall be designed to transfer the vertical and horizontal loads shown in the table on Drawing F6 to the pier. Cribbing must provide for thermal effects.
5. The members selected for the temporary support system, jacks and cribbing shall provide adequate clearance to perform the work on the pier and bearings.
6. The truss shall be raised a maximum of 3 mm. All jacks for the deck truss at this pier shall be raised and lowered simultaneously. All jacks for the thru truss at this pier shall be raised and lowered simultaneously.
7. All steel shown is included with "Temporary Support System".
8. Cost of any excavation required to set the steel columns on top of the existing footing shall be included with "Temporary Support System".
9. The jacks shall have a minimum capacity of $1\frac{1}{2}$ times the tabulated loads.

DESIGNED	Steve Negangard
CHECKED	S. Moynihan
DRAWN	John F. Schneller Jr.
CHECKED	S.P.N. S.E.M.

March 10, 1999
EXAMINED Engineer of Bridge Design
PASSED Engineer of Bridges and Structures

TEMPORARY SUPPORT SYSTEM DETAILS
PIER 10
F.A. ROUTE 317 SECTION 15B-1-8
PEORIA AND TAZEWELL COUNTIES
STATION 6+791.262

DWG. NO. F7

ROUTE NO.	SECTION	COUNTY	TOTAL SHEETS	SHEET NO.
F.A. 317	15B-1-8	PEORIA & TAZEWELL	303	206
FED. ROAD DIST. NO. 7		ILLINOIS	FED. AID PROJECT-	

SHEET NO.
SHEETS

STATE OF ILLINOIS
DEPARTMENT OF TRANSPORTATION

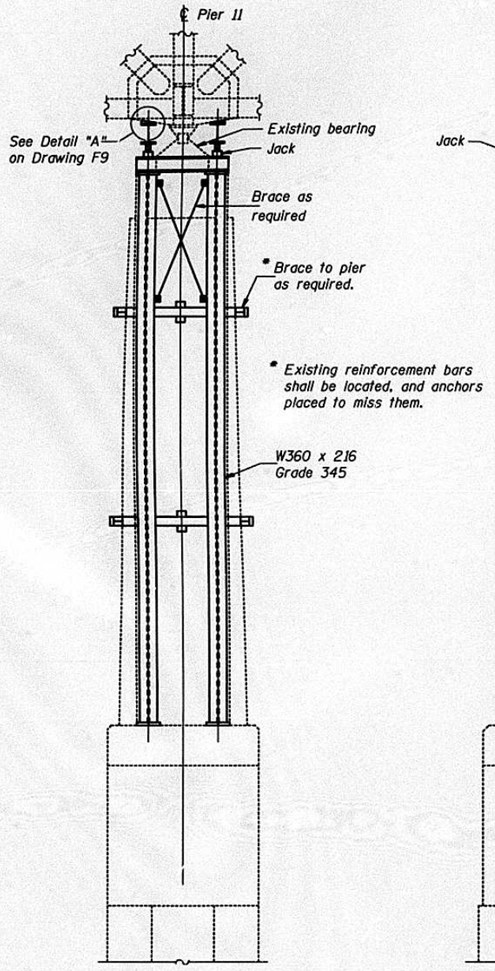

ELEVATION - NORTH END

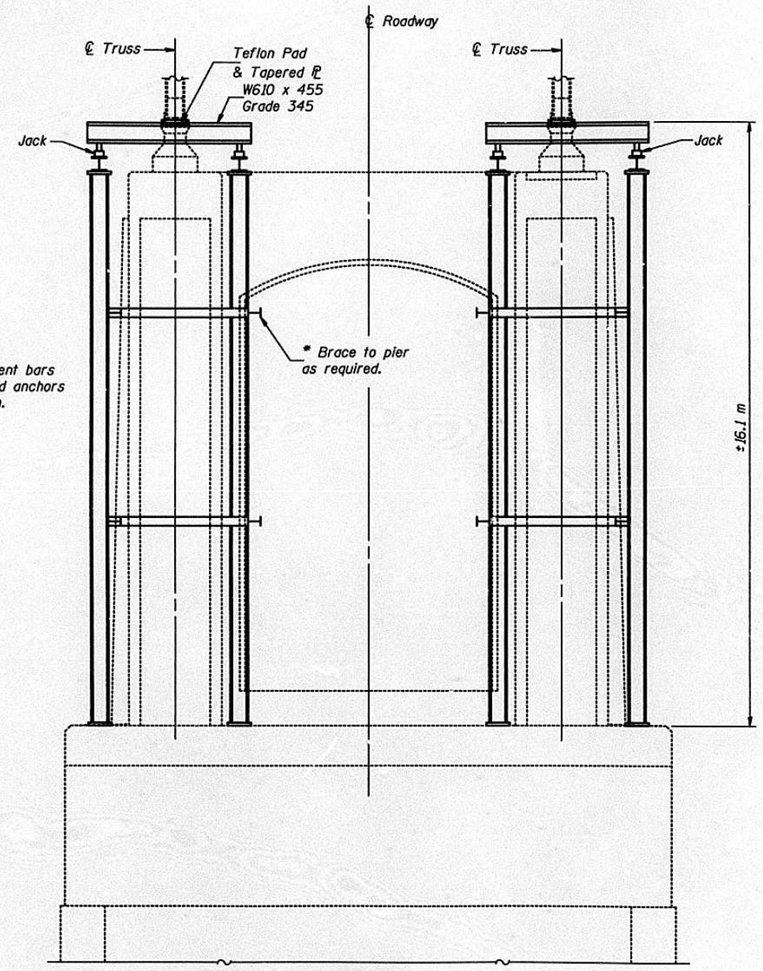

ELEVATION
(Looking East)

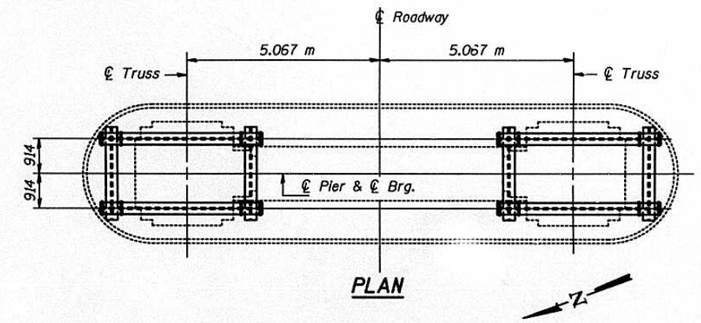

PLAN

BILL OF MATERIAL

ITEM	UNIT	TOTAL
Temporary Support System	Each	1
Jacking and Cribbing	Each	2

LOADS PER BEARING

Dead Load Vertical	3973 kN
Wind Load Vertical	±1041 kN
Wind Load Transverse	±685 kN

DESIGNED	Steve Negangard
CHECKED	S. Moynihan
DRAWN	John F. Schneller Jr.
CHECKED	S.P.N. S.E.M.

March 10, 1999

EXAMINED Jerzy J. Kaspar
ENGINEER OF BRIDGE DESIGN

PASSED Ralph E. Anderson
ENGINEER OF BRIDGES AND STRUCTURES

TEMPORARY SUPPORT SYSTEM
PIER 11
F.A. ROUTE 317 SECTION 15B-1-8
PEORIA AND TAZEWELL COUNTIES
STATION 6+791.262

DWG. NO. F9

STATE OF ILLINOIS
DEPARTMENT OF TRANSPORTATION

ROUTE NO.	SECTION	COUNTY	TOTAL SHEETS	SHEET NO.
F.A. 317	15B-1-8	PEORIA & TAZEWELL	303	207
FED. ROAD DIST. NO. 7		ILLINOIS	FED. AID PROJECT-	

SHEET NO.
SHEETS

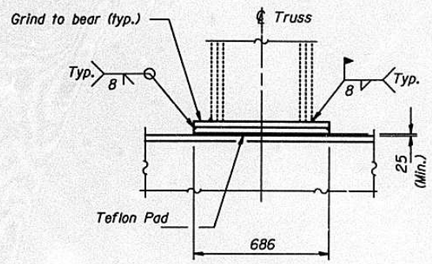

SECTION A-A

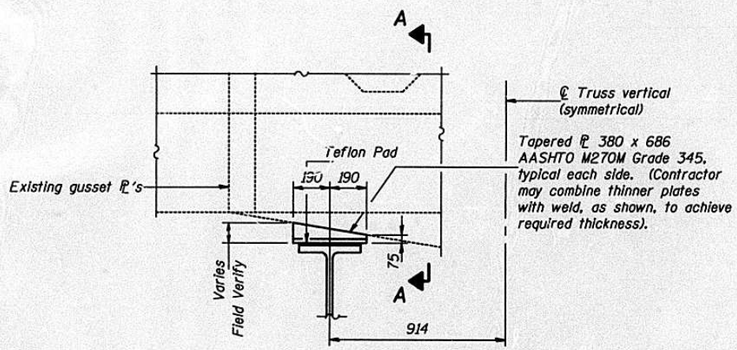

DETAIL A

New steel plates to remain in place after jacking operation.

NOTES

1. Repairs to Pier 12 shall be finished and truss set back down on reinstalled bearings before Pier 11 is supported on its temporary support.
2. Existing concrete deck from Spans 12 thru 14 shall be removed before beginning jacking and cribbing at Pier 11. No form work for new concrete deck shall be placed until the trusses are set on new or reinstalled bearings.
3. The temporary support system, jacks and cribbing are conceptually shown for bidding purposes only. The member sizes shown are estimated. Additional members not shown may be required. A complete design, signed and sealed by an Illinois Licensed Structural Engineer shall be submitted to the Department by the Contractor for approval.
4. The temporary support system, jacks and cribbing shall be designed to transfer the vertical and horizontal loads shown in the table on Drawing F8 to the pier. Cribbing must provide for thermal effects.
5. The members selected for the temporary support system, jacks and cribbing shall provide adequate clearance to perform the work on the bearings.
6. The truss shall be raised a maximum of 3 mm. All jacks shall be raised and lowered simultaneously.
7. All steel shown is included with "Temporary Support System".
8. The jacks shall have a minimum capacity of $1\frac{1}{2}$ times the tabulated loads.

DESIGNED	Steve Negangard
CHECKED	S. Moynihan
DRAWN	John F. Schneller Jr.
CHECKED	S.P.N. S.E.M.

March 10, 1999
EXAMINED Jaj J. Kaspar ENGINEER OF BRIDGE DESIGN
PASSED Ralph E. Anderson ENGINEER OF BRIDGES AND STRUCTURES

TEMPORARY SUPPORT SYSTEM DETAILS
PIER 11
F.A. ROUTE 317 SECTION 15B-I-8
PEORIA AND TAZEWELL COUNTIES
STATION 6+791.262

DWG. NO. F9

ROUTE NO.	SECTION	COUNTY	TOTAL SHEETS	SHEET NO.
F.A. 317	15B-1-8	PEORIA & TAZEWELL	303	208
FED. ROAD DIST. NO. 7	ILLINOIS	FED. AID PROJECT-		

SHEET NO.

SHEETS

STATE OF ILLINOIS
DEPARTMENT OF TRANSPORTATION

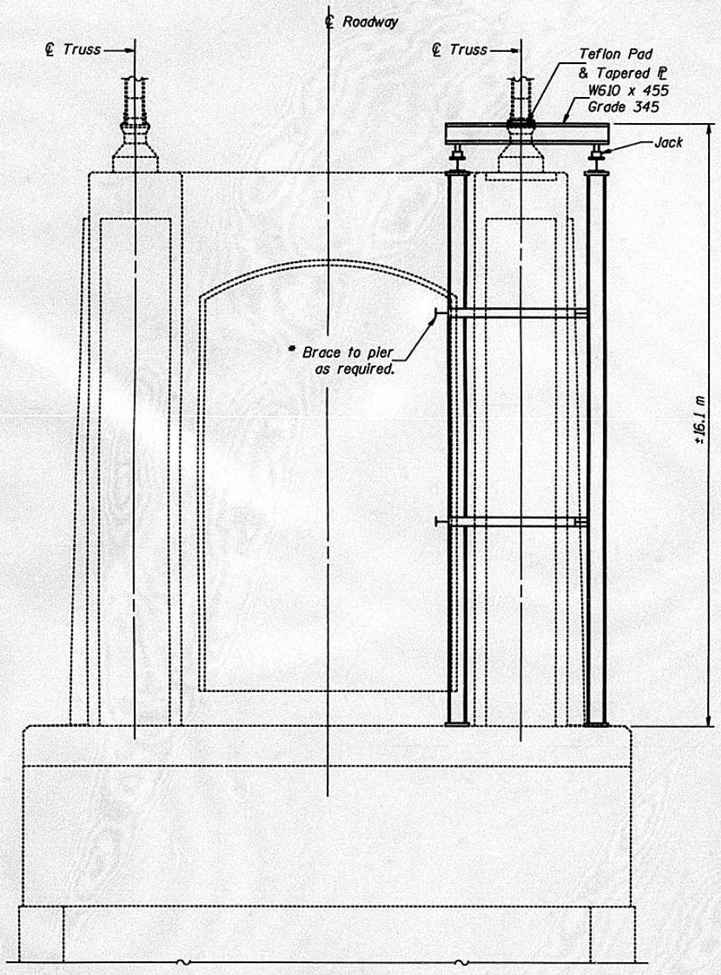

ELEVATION
(Looking East)

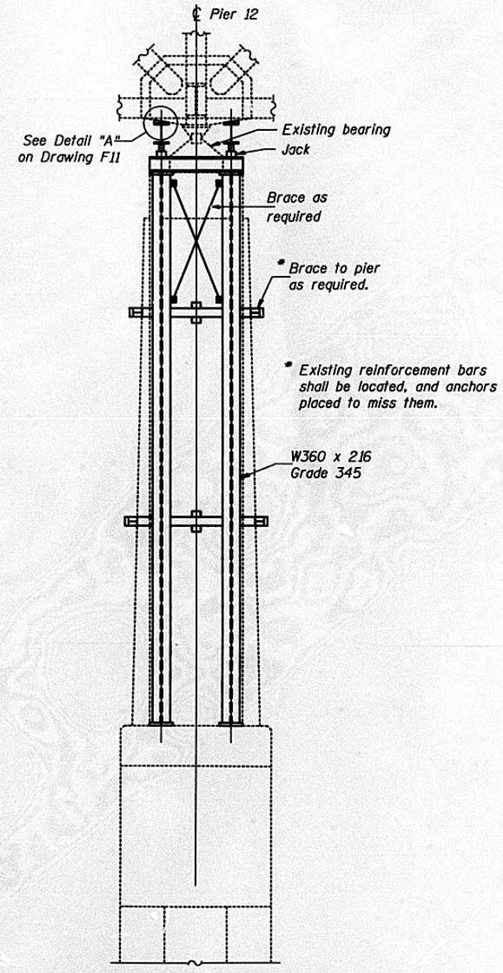

ELEVATION - SOUTH END

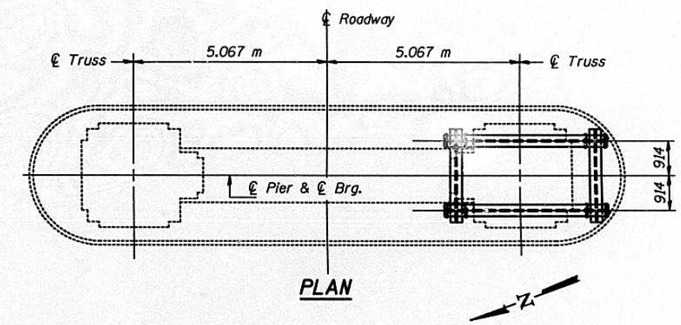

PLAN

BILL OF MATERIAL

ITEM	UNIT	TOTAL
Temporary Support System	Each	1
Jacking and Cribbing	Each	1

DESIGNED	Steve Negangard
CHECKED	S. Moynihan
DRAWN	John F. Schneller Jr.
CHECKED	S.P.N. S.E.M.

March 10, 1999

EXAMINED Jaj J. Kaspar
ENGINEER OF BRIDGE DESIGN

PASSED Ralph E. Anderson
ENGINEER OF BRIDGES AND STRUCTURES

LOADS PER BEARING

Dead Load Vertical	3973 kN
Wind Load Vertical	±1041 kN
Wind Load Transverse	±685 kN
Wind Load Longitudial	±1221 kN

TEMPORARY SUPPORT SYSTEM
PIER 12
F.A. ROUTE 317 SECTION 15B-I-8
PEORIA AND TAZEWELL COUNTIES
STATION 6+791.262

DWG. NO. F10

STATE OF ILLINOIS
DEPARTMENT OF TRANSPORTATION

ROUTE NO.	SECTION	COUNTY	TOTAL SHEETS	SHEET NO.
F.A. 317	15B-I-8	PEORIA & TAZEWELL	303	209
FED. ROAD DIST. NO. 7		ILLINOIS	FED. AID PROJECT-	

SHEET NO.
SHEETS

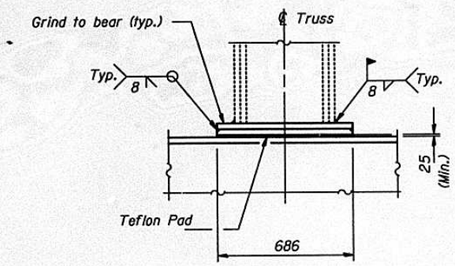

SECTION A-A

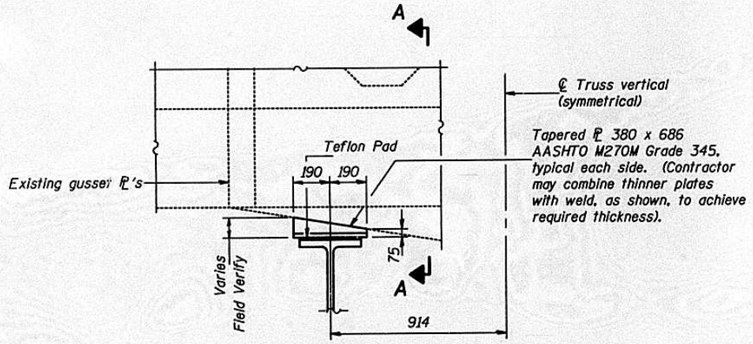

DETAIL A

New steel plates to remain in place after jacking operation.

NOTES

1. Pier 11 South bearing shall be modified to resist the longitudinal wind load shown for Pier 12 before jacking at Pier 12. Cost is included with "Temporary Support System". A complete design, signed and sealed by an Illinois Licensed Structural Engineer shall be submitted to the Department by the Contractor for approval.
2. Existing concrete deck from Spans 12 thru 14 shall be removed before beginning jacking and cribbing at Pier 12. No form work for new concrete deck shall be placed until the trusses are set on new or reinstalled bearings.
3. The temporary support system, jacks and cribbing are conceptually shown for bidding purposes only. The member sizes shown are estimated. Additional members not shown may be required. A complete design, signed and sealed by an Illinois Licensed Structural Engineer shall be submitted to the Department by the Contractor for approval.
4. The temporary support system, jacks and cribbing shall be designed to transfer the vertical and horizontal loads shown in the table on Drawing F10 to the pier. Cribbing must provide for thermal effects.
5. The members selected for the temporary support system, jacks and cribbing shall provide adequate clearance to perform the work on the pier and bearing.
6. The truss shall be raised a maximum of 3 mm. All jacks shall be raised and lowered simultaneously.
7. All steel shown is included with "Temporary Support System".
8. The jacks shall have a minimum capacity of $1\frac{1}{2}$ times the tabulated loads.

DESIGNED	Steve Negangard
CHECKED	S. Moynihan
DRAWN	John F. Schneller Jr.
CHECKED	S.P.N. S.E.M.

March 10, 1999
EXAMINED Greg J. Kasper ENGINEER OF BRIDGE DESIGN
PASSED Ralph E. Anderson ENGINEER OF BRIDGES AND STRUCTURES

TEMPORARY SUPPORT SYSTEM DETAILS
PIER 12
F.A. ROUTE 317 SECTION 15B-I-8
PEORIA AND TAZEWELL COUNTIES
STATION 6+791.262

DWG. NO. F11

STATE OF ILLINOIS
DEPARTMENT OF TRANSPORTATION

ROUTE NO.	SECTION	COUNTY	TOTAL SHEETS	SHEET NO.
F.A. 317	15B-1-8	PEORIA & TAZEWELL	303	210
FED. ROAD DIST. NO. 7	ILLINOIS	FED. AID PROJECT-		

SHEET NO.
SHEETS

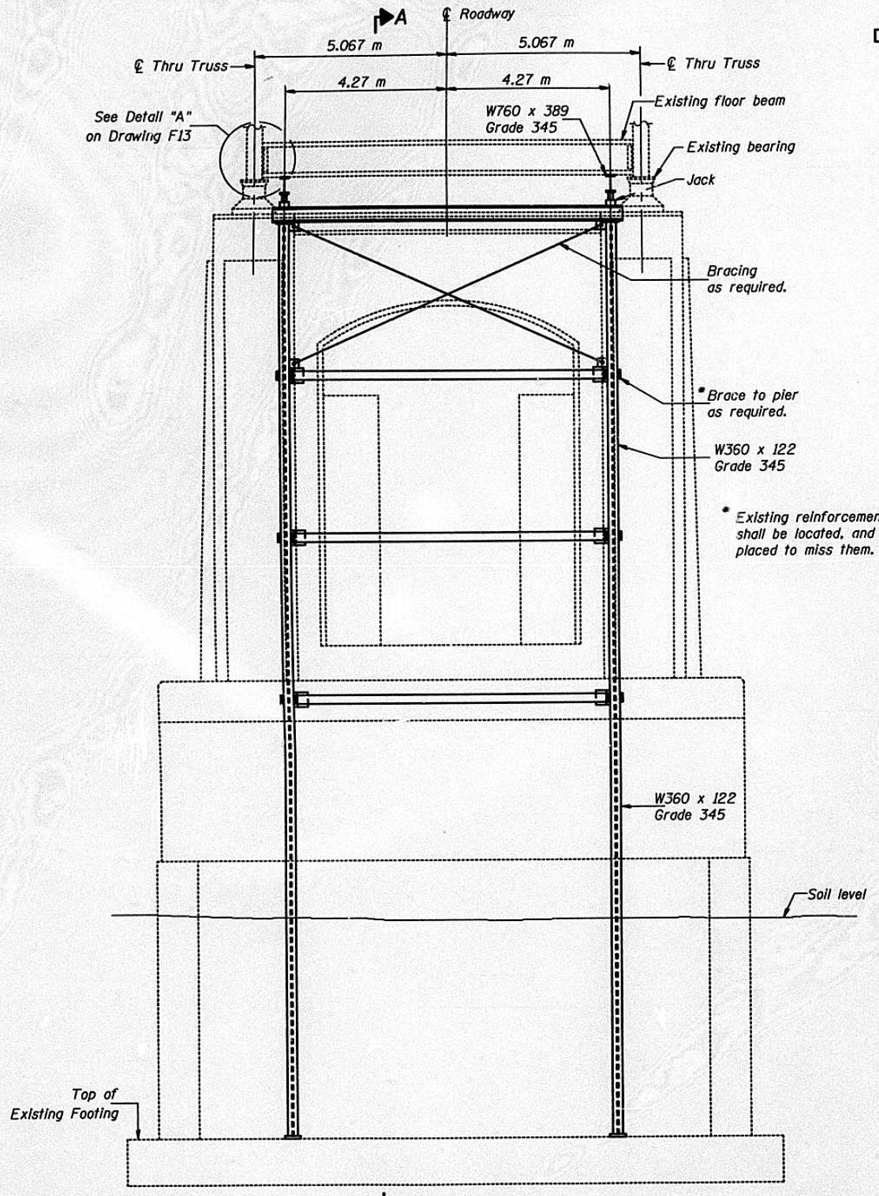

ELEVATION
(Looking East)

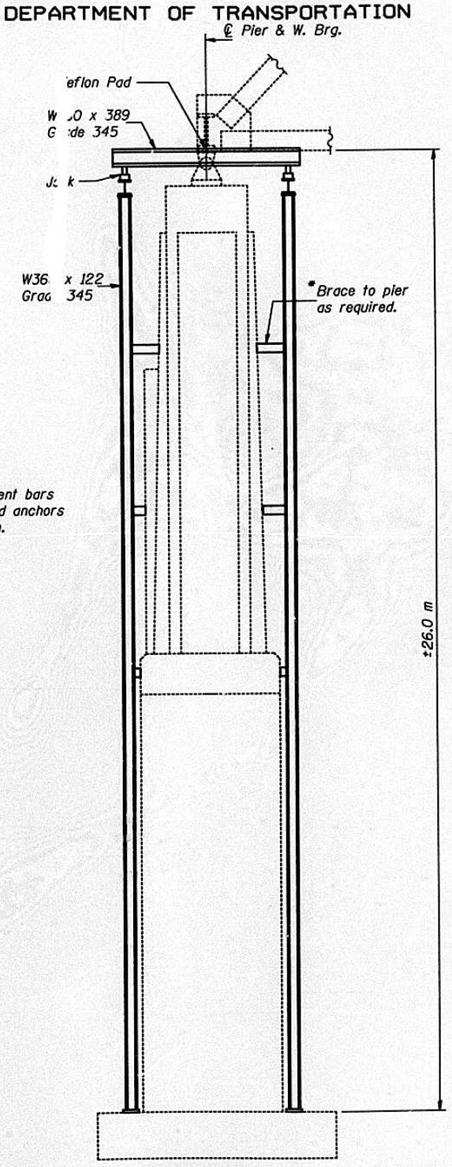

SECTION A-A

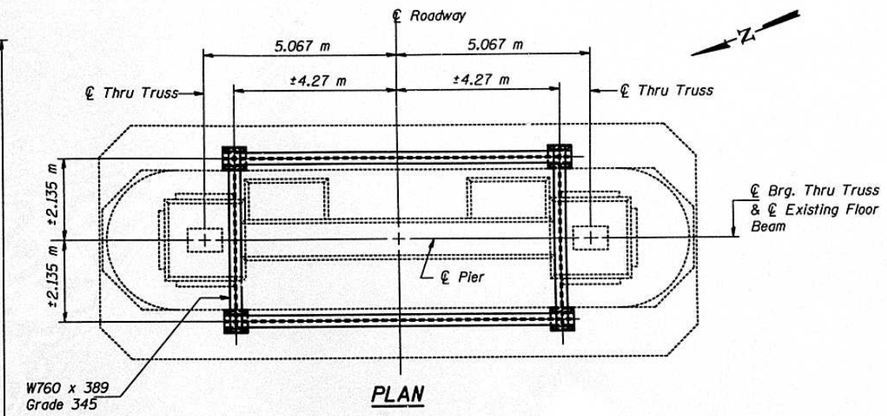

PLAN

BILL OF MATERIAL

ITEM	UNIT	TOTAL
Temporary Support System	Each	1
Jacking and Cribbing	Each	2

DESIGNED	Steve Negangard
CHECKED	S. Moynihan
DRAWN	John F. Schneller Jr.
CHECKED	S.P.N. S.E.M.

March 10, 1999
EXAMINED Greg J. Kasper — ENGINEER OF BRIDGE DESIGN
PASSED Ralph E. Anderson — ENGINEER OF BRIDGES AND STRUCTURES

LOADS PER BEARING WEST SIDE

Dead Load Vertical	1104 kN
Wind Load Vertical	±267 kN
Wind Load Transverse	±227 kN

TEMPORARY SUPPORT SYSTEM
PIER 13
F.A. ROUTE 317 SECTION 15B-1-8
PEORIA AND TAZEWELL COUNTIES
STATION 6+791.262

DWG. NO. F12

TAMERAN

ROU'E NO.	SECTION	COUNTY	TOTAL SHEETS	SHEET NO.
F.A. 317	15B-1-8	PEORIA & TAZEWELL	303	211
FED. ROAD DIST. NO. 7	ILLINOIS	FED. AID PROJECT-		

SHEET NO.

SHEETS

STATE OF ILLINOIS
DEPARTMENT OF TRANSPORTATION

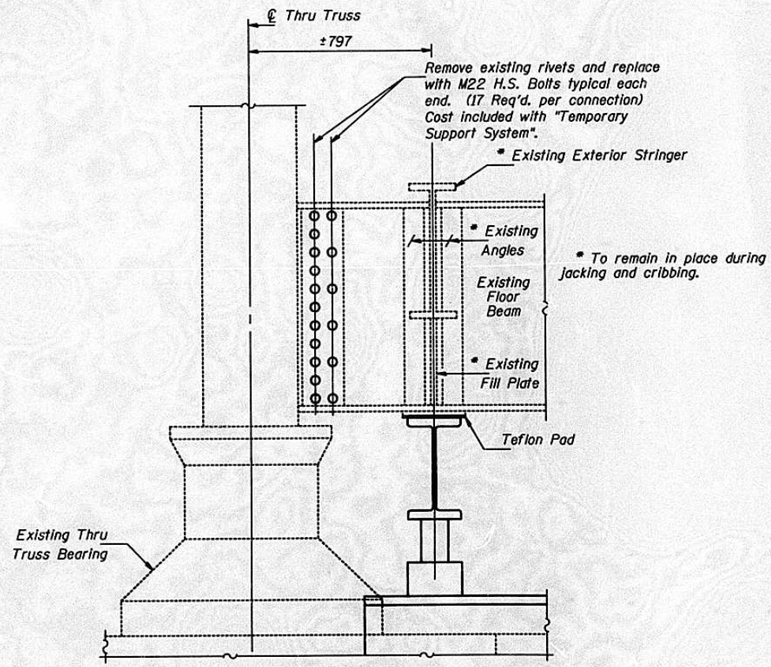

DETAIL "A"

NOTES

1. Remove rivets one at a time and replace with M22 H.S. Bolts as shown before jacking truss.
2. Existing concrete deck from Spans 12 thru 14 shall be removed before beginning jacking and cribbing at Pier 13. No form work for new concrete deck shall be placed until the trusses are set on new bearings.
3. The temporary support system, jacks and cribbing are conceptually shown for bidding purposes only. The member sizes shown are estimated. Additional members not shown may be required. A complete design, signed and sealed by an Illinois Licensed Structural Engineer shall be submitted to the Department by the Contractor for approval.
4. The temporary support system, jacks and cribbing shall be designed to transfer the vertical and horizontal loads shown in the table on Drawing F12 to the pier. Cribbing must provide for thermal effects.
5. The members selected for the temporary support system, jacks and cribbing shall provide adequate clearance to perform the work on the pier and bearings.
6. The truss shall be raised a maximum of 3 mm. All jacks shall be raised and lowered simultaneously.
7. All steel shown is included with "Temporary Support System".
8. Cost of any excavation required to set the steel columns on top of the existing footing shall be included with "Temporary Support System".
9. The jacks shall have a minimum capacity of $1\frac{1}{2}$ times the tabulated loads.

DESIGNED	Steve Negangard
CHECKED	S. Moynihan
DRAWN	John F. Schueller Jr.
CHECKED	S.P.N. S.E.M.

March 10, 1999

EXAMINED Raj D. Kaspar
ENGINEER OF BRIDGE DESIGN

PASSED Ralph E. Anderson
ENGINEER OF BRIDGES AND STRUCTURES

TEMPORARY SUPPORT SYSTEM DETAILS
PIER 13
F.A. ROUTE 317 SECTION 15B-1-8
PEORIA AND TAZEWELL COUNTIES
STATION 6+791.262

DWG. NO. F13

D C B A 0 A B C

TAMERAN

ROUTE NO.	SECTION	COUNTY	TOTAL SHEETS	SHEET NO.	
F.A. 317	15B-1-8	PEORIA & TAZEWELL	303	212	SHEET NO. SHEETS
FED. ROAD DIST. NO. 7	ILLINOIS	FED. AID PROJECT-			

STATE OF ILLINOIS
DEPARTMENT OF TRANSPORTATION

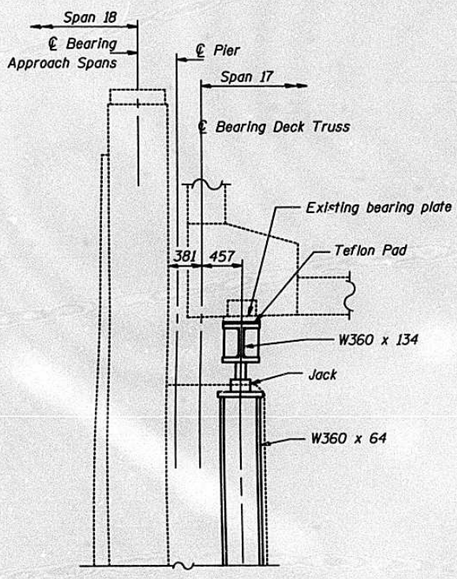

ELEVATION - NORTH END

* Existing reinforcement bars shall be located, and anchors placed to miss them.

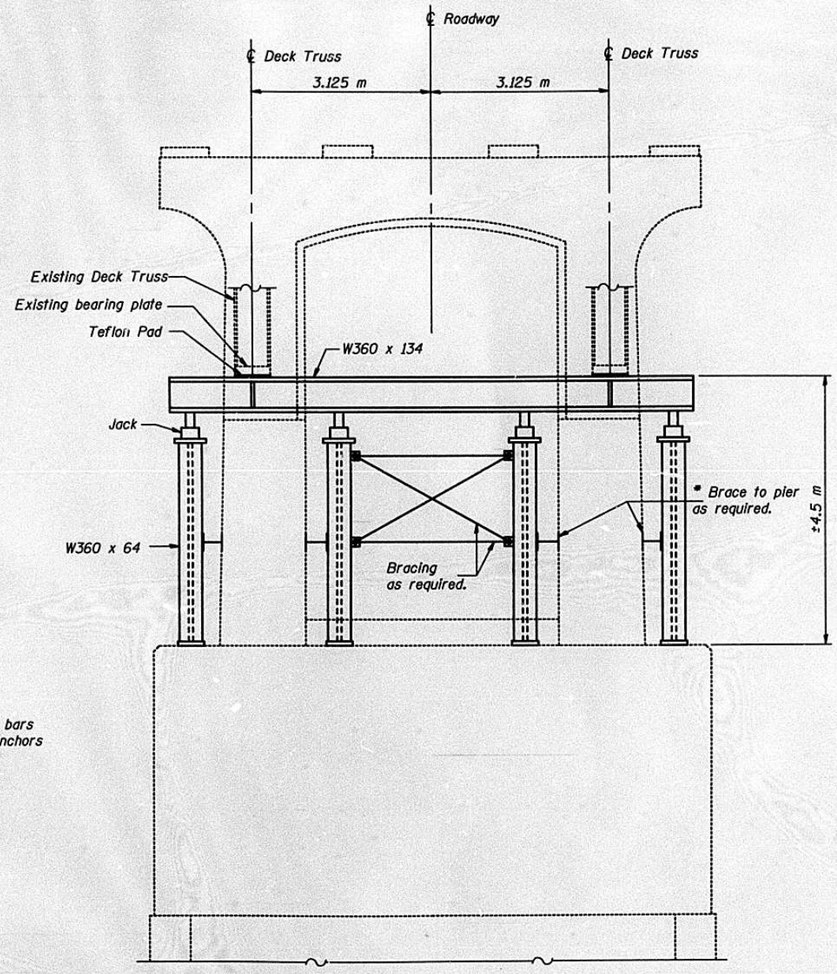

ELEVATION
(Looking East)

NOTES

1. Existing concrete deck from Spans 15 thru 17 shall be removed before beginning jacking and cribbing for Pier 16. No form work for new concrete deck shall be placed until the trusses are set on new or reinstalled bearings.
2. The temporary support system, jacks and cribbing are conceptually shown for bidding purposes only. The member sizes shown are estimated. Additional members not shown may be required. A complete design, signed and sealed by an Illinois Licensed Structural Engineer shall be submitted to the Department by the Contractor for approval.
3. The temporary support system, jacks and cribbing shall be designed to transfer the vertical and horizontal loads shown in the table to the pier. Cribbing must provide for thermal effects.
4. The members selected for the temporary support system, jacks and cribbing shall provide adequate clearance to perform the work on the pier and bearings.
5. The truss shall be raised a maximum of 3 mm. All jacks shall be raised and lowered simultaneously.
6. All steel shown is included with "Temporary Support System".

BILL OF MATERIAL

ITEM	UNIT	TOTAL
Temporary Support System	Each	1
Jacking and Cribbing	Each	2

LOADS PER BEARING

Dead Load Vertical	316 kN
Wind Load Vertical	±94 kN
Wind Load Transverse	±66 kN

DESIGNED	Steve Negangard
CHECKED	S. Moynihan
DRAWN	John F. Schneller Jr.
CHECKED	S.P.N. S.E.M.

March 10, 1999
EXAMINED Engineer of Bridge Design
PASSED Engineer of Bridges and Structures

TEMPORARY SUPPORT SYSTEM
PIER 16
F.A. ROUTE 317 SECTION 15B-1-8
PEORIA AND TAZEWELL COUNTIES
STATION 6+791.262

DWG. NO. F14

STATE OF ILLINOIS
DEPARTMENT OF TRANSPORTATION

ROUTE NO.	SECTION	COUNTY	TOTAL SHEETS	SHEET NO.
F.A. 317	15B-1-8	PEORIA & TAZEWELL	303	213
FED. ROAD DIST. NO. 7	ILLINOIS	FED. AID PROJECT-		

SHEET NO.
SHEETS

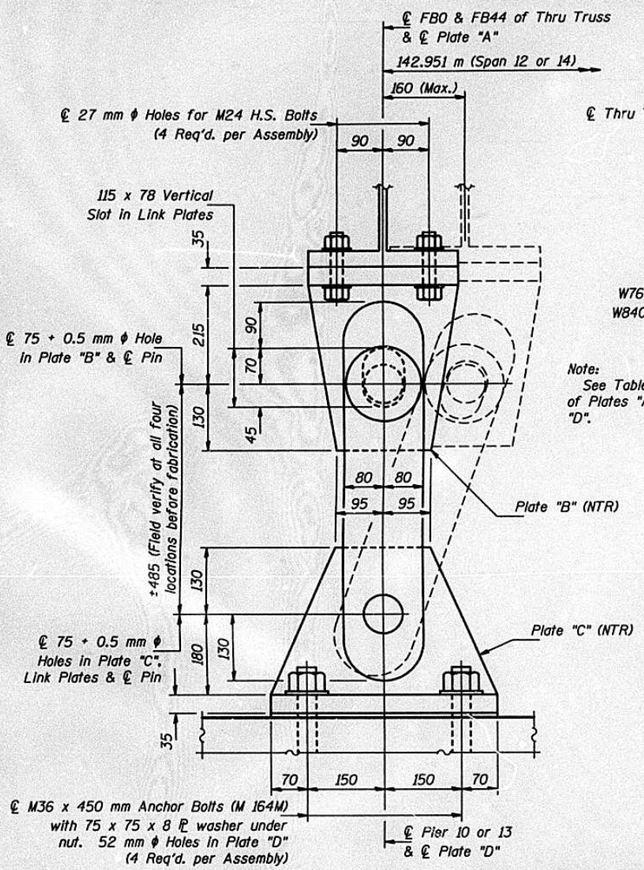

WIND ANCHORAGE ASSEMBLY

(Total Required = 4)
(2 at FB0 of Thru Truss - Pier 10)
(2 at FB44 of Thru Truss - Pier 13)

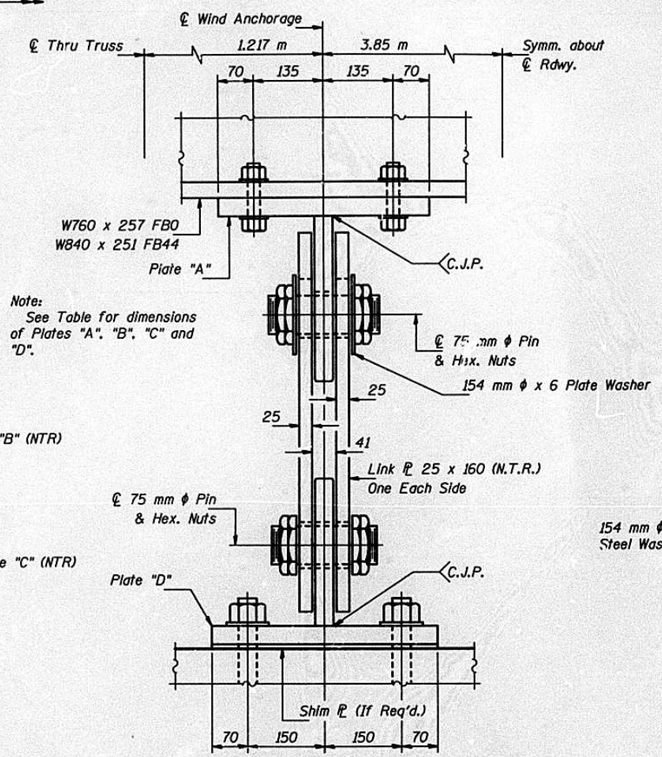

Note:
See Table for dimensions of Plates "A", "B", "C" and "D".

Note:
Plates "A", "B", "C", "D" and Link Plates are AASHTO M 270M, Grade 345.

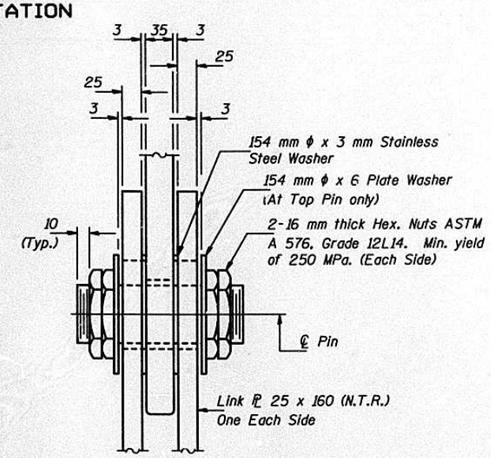

DETAIL OF TOP CONNECTION

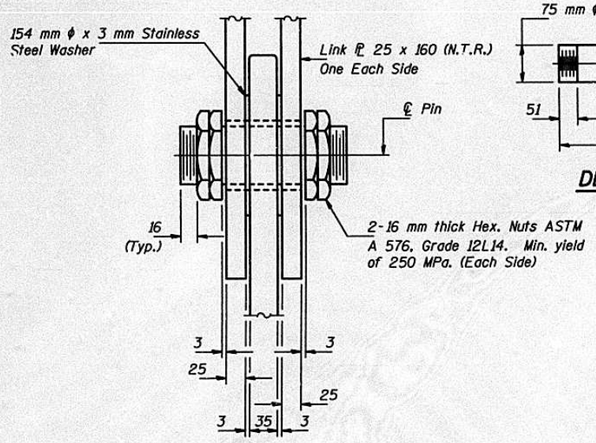

DETAIL OF BOTTOM CONNECTION

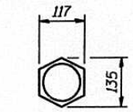

INTERIOR NUT DETAIL

(4 Req'd. per Wind Anchorage Assembly)

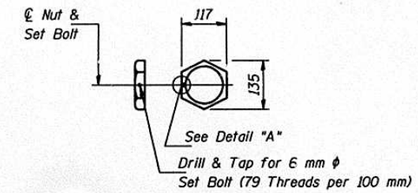

EXTERIOR NUT DETAIL

(4 Req'd. per Wind Anchorage Assembly)

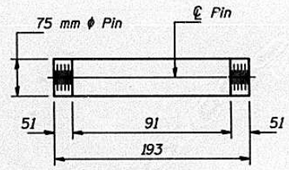

DETAIL OF PIN

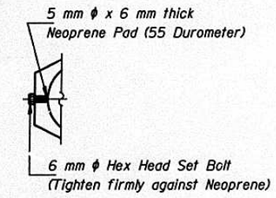

DETAIL "A"

Set Bolts shall conform to the requirements of ASTM A 307 and shall be galvanized according to AASHTO M 232.

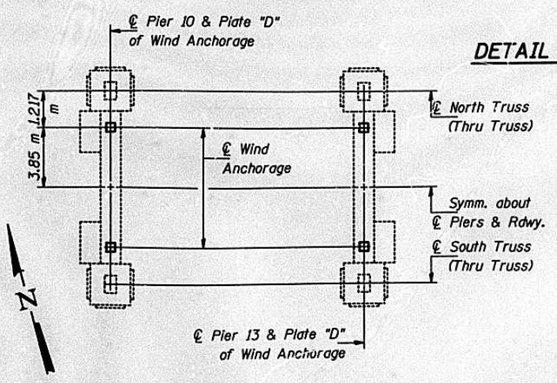

LOCATION PLAN

Notes:

The existing Wind Anchorage Assemblies at Piers 10 and 13 shall be removed. Cost included with "Wind Anchorage Assembly Replacement". Removal of the existing Anchor Bolts is included with "Concrete Removal" on Drawings F35 & F38.

The Pins, Plates, Link Plates, Bolts, Nuts, Washers, Set Bolts, Neoprene Pads, Anchor Bolts, and Shim Plates are included in the pay item "Wind Anchorage Assembly Replacement".

The Pins shall be ASTM A 276, UNS 21800 (Nitronic 60 or equal). (No step at threads.) 50 threads per 100 mm. The Pins shall conform to the minimum Charpy V-Notch Toughness of 34 J at 4 °C.

Stainless steel washers shall be ASTM A 240 Type 304.

Tighten inside Nuts at bottom Pin until 3 mm of clearance is provided between the Nut and the Link Plate. Tighten outer Nuts. Tighten Set Bolts.

Tighten inside Nuts at top Pin until 3 mm of clearance is provided between the Plate Washers and the Link Plates (zero clearance between inside Nuts and Plate Washers). Tighten outer Nuts. Tighten Set Bolts.

N.T.R. denotes plates to which Notch Toughness Requirements are applicable.

Inside face of link plates shall receive first field coat in shop. The primer shall pass the M.E.K. Rub Test before the first field coat is applied.

Provide 2 - 3 x 440 x 440 adjusting Shims per Wind Anchorage Assembly.

For Anchor Bolt installation details, see Drawing F29.

For details of FB0 and FB44 of the Thru Truss, see Drawings C37 and C38.

TABLE OF DIMENSIONS FOR PLATES "A", "B", "C" & "D"

Plate "A"	35 x 380 x 410 (FB0) 35 x 292 x 410 (FB44)
* Plate "B	35 x 380 x 345 (FB0) 35 x 292 x 345 (FB44)
* Plate "C"	35 x 440 x 310
Plate "D"	35 x 440 x 440

* Tapered Plates. Width tapers from dimension shown to 190 mm.

BILL OF MATERIAL

Item	Unit	Total
Wind Anchorage Assembly Replacement	Each	4

DESIGNED	S. Moynihan
CHECKED	D. Verhulst
DRAWN	John F. Schneller Jr.
CHECKED	S.E.M. D.G.V.

March 10, 1999

EXAMINED Greg J. Kasper
ENGINEER OF BRIDGE DESIGN

PASSED Ralph E. Anderson
ENGINEER OF BRIDGES AND STRUCTURES

WIND ANCHORAGE ASSEMBLY
PIERS 10 & 13 (THRU TRUSS)
F.A. ROUTE 317 SECTION 15B-1-8
PEORIA AND TAZEWELL COUNTIES
STATION 6+791.262

DWG. NO. F15

STATE OF ILLINOIS
DEPARTMENT OF TRANSPORTATION

ROUTE NO.	SECTION	COUNTY	TOTAL SHEETS	SHEET NO.
F.A. 317	15B-I-8	PEORIA & TAZEWELL	303	214
FED. ROAD DIST. NO. 7	ILLINOIS	FED. AID PROJECT-		

SHEET NO.
SHEETS

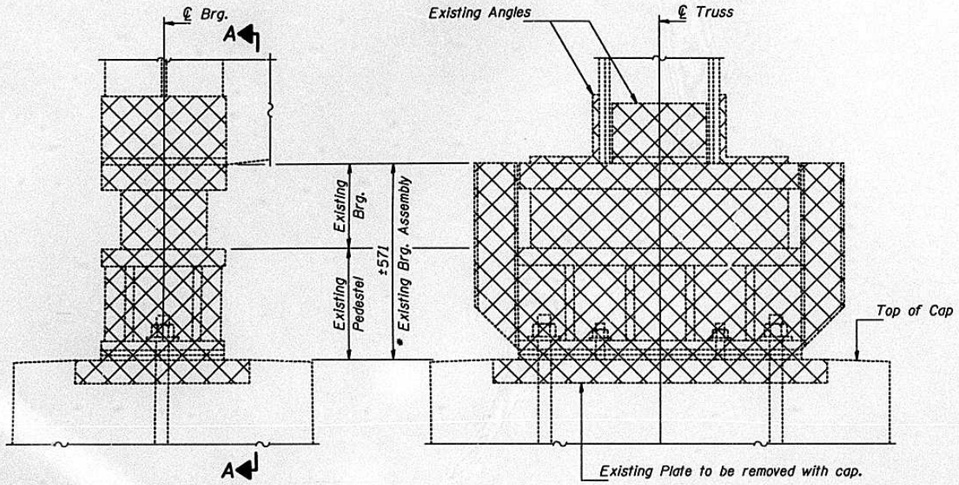

EXISTING ELEVATION AT PIERS 4 (EAST) & 10 (WEST)

VIEW A-A

Note:
Cost of removal of the Existing Plate is included with "Concrete Removal". See Drawings F30 and F35.

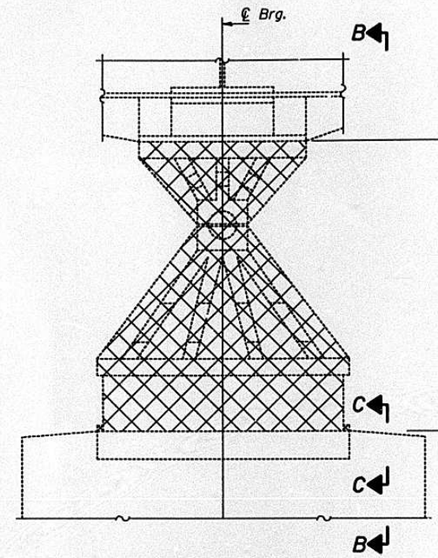

EXISTING ELEVATION AT PIER 11

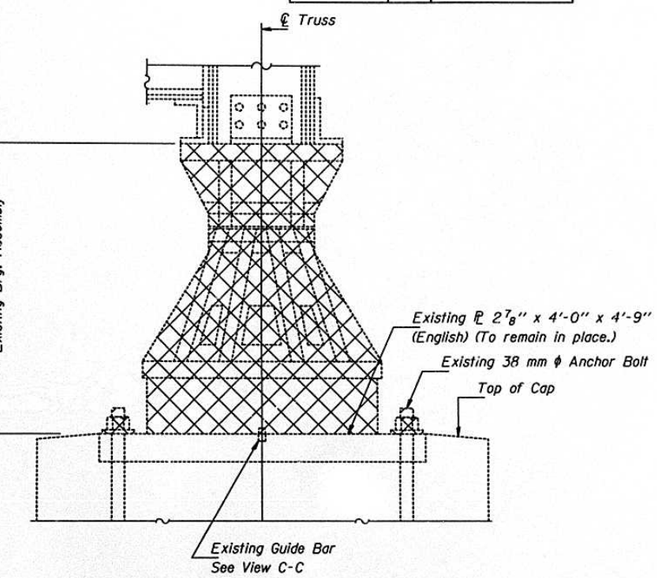

VIEW B-B

Note:
Cut Existing Anchor Bolt as shown and grind flush. Do not thermal cut within 3 mm of remaining plate. Fill any vertical gaps with Silicon Sealant suitable for Structural Steel. Cost included with "Structural Steel Removal".

* Dimensions shall be verified and shim plates provided to achieve proper final positioning of the New Bearing. Cost of any additional shim plates, not included in the General Notes on Drawing F1, shall be included with "Furnishing and Erecting Structural Steel". These additional shim plates shall match the length and width of the adjusting Shims shown with the details of the New Bearings on Drawings F20, F21 or F22.

Notes:
Cross-hatched areas indicate the limits of removal. Cost included with "Structural Steel Removal" unless otherwise noted.
For "Jacking and Cribbing" Details see Drawings F3, F6, F8, F9 or F14.

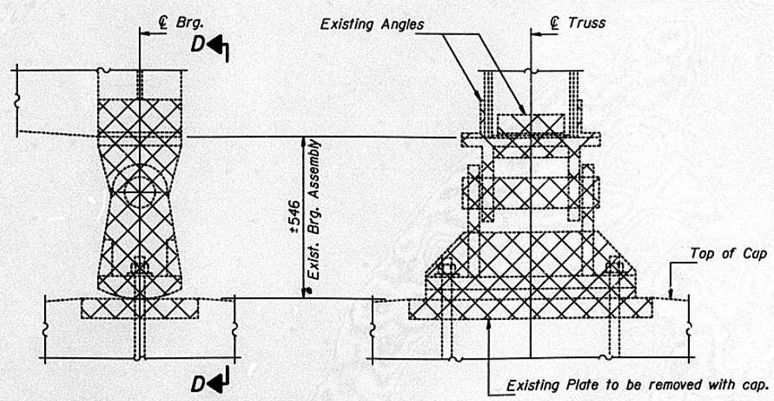

EXISTING ELEVATION AT PIER 16 (WEST)

VIEW D-D

Note:
Cost of removal of the Existing Plate is included with "Concrete Removal". See Drawing F41.

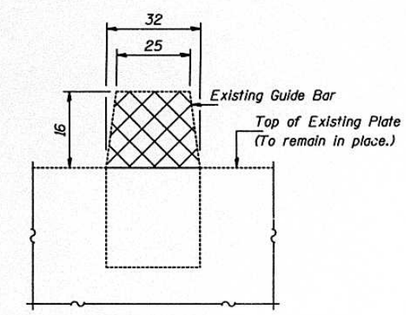

VIEW C-C

Note:
Cut Guide Bar as shown and grind flush. Do not thermal cut within 3 mm of remaining plate. Cost included with "Structural Steel Removal".

DESIGNED	S. Moynihan
CHECKED	D. Verhulst
DRAWN	John F. Schneller Jr.
CHECKED	S.E.M. D.G.V.

March 10, 1999
EXAMINED Jaj J. Kaspar — ENGINEER OF BRIDGE DESIGN
PASSED Ralph E. Anderson — ENGINEER OF BRIDGES AND STRUCTURES

BEARING REMOVAL
PIERS 4 (EAST), 10 (WEST), 11 & 16 (WEST)
F.A. ROUTE 317 SECTION 15B-I-8
PEORIA AND TAZEWELL COUNTIES
STATION 6+791.262

DWG. NO. F16

TAMERAN

STATE OF ILLINOIS
DEPARTMENT OF TRANSPORTATION

ROUTE NO.	SECTION	COUNTY	TOTAL SHEETS	SHEET NO.
F.A. 317	15B-1-8	PEORIA & TAZEWELL	303	219
FED. ROAD DIST. NO. 7	ILLINOIS	FED. AID PROJECT-		

SHEET NO.
SHEETS

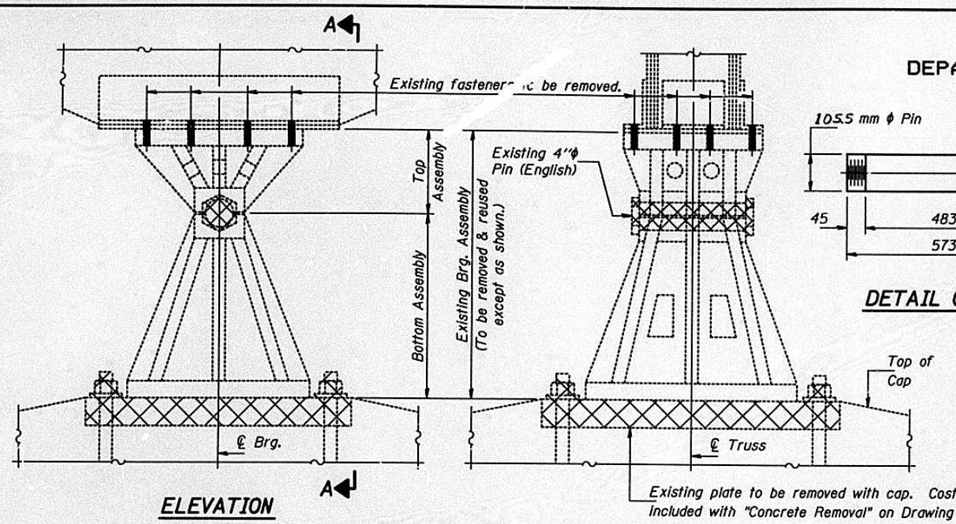

ELEVATION

VIEW A-A

BEARING REMOVAL AT PIER 5

Existing plate to be removed with cap. Cost included with "Concrete Removal" on Drawing F31.

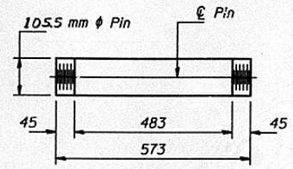

DETAIL OF PIN

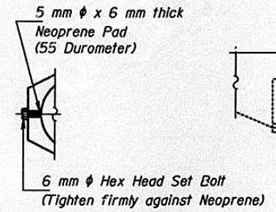

DETAIL "G"

Set Bolts shall conform to the requirements of ASTM A 307 and shall be galvanized according to AASHTO M 232.

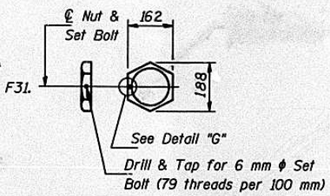

EXTERIOR NUT DETAIL
(2 Required)

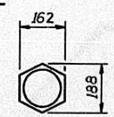

INTERIOR NUT DETAIL
(2 Required)

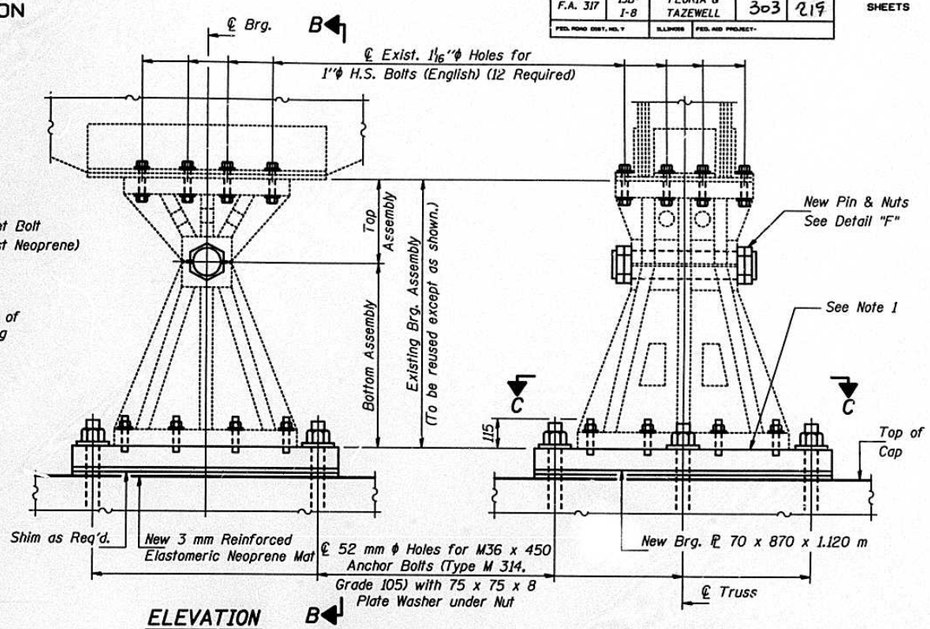

ELEVATION

VIEW B-B

BEARING REINSTALLATION AT PIER 5

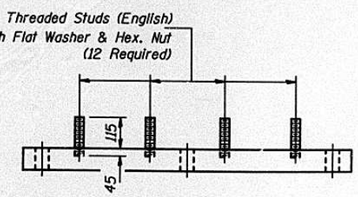

VIEW D-D

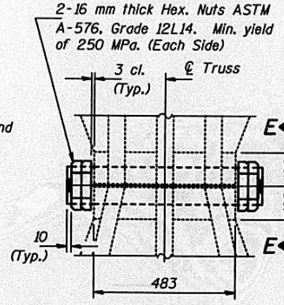

DETAIL "F"

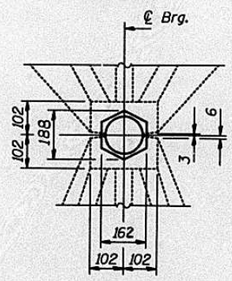

VIEW E-E

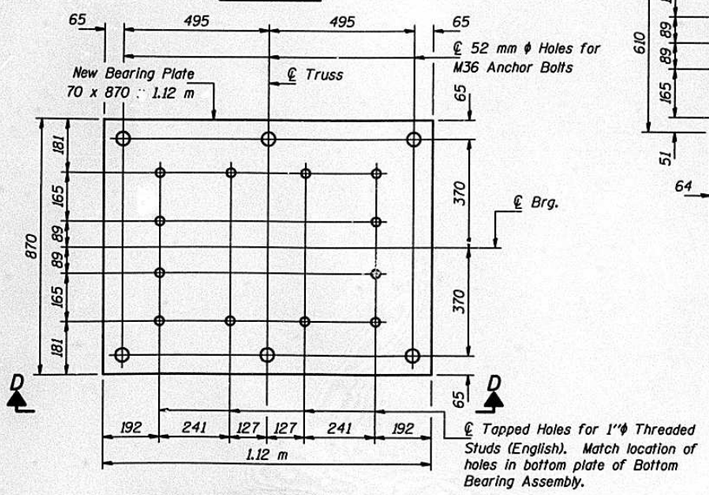

PLAN - NEW BRG. PLATE

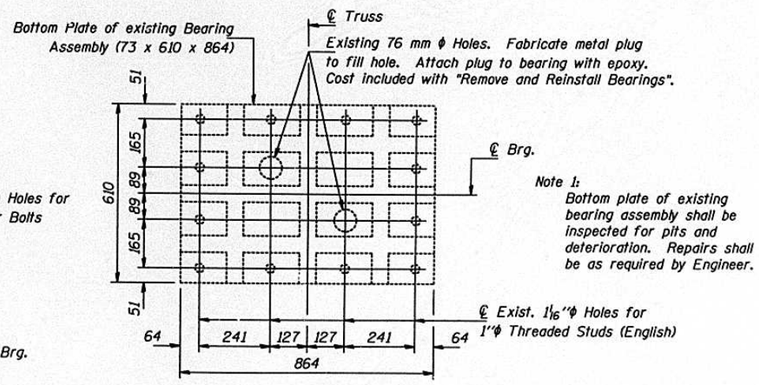

Note 1:
Bottom plate of existing bearing assembly shall be inspected for pits and deterioration. Repairs shall be as required by Engineer.

SECTION C-C

Notes:

Cross hatched areas indicate limits of items to be removed and discarded.

Do not thermal cut within 3 mm of any structural steel that is to be reused. Care shall be taken not to damage any Structural Steel that is to be reused.

The Existing Bearing Assembly shall be removed. The Existing Bearing Assembly except for the pin and nuts shall be stored and reinstalled.

The Pins shall be ASTM A276, UNS 21800 (Nitronic 60 or equal). (No step at threads.) 50 threads per 100 mm.

Tighten inside nuts until 3 mm of clearance is provided between the nut and the existing bearing assembly. Tighten outer nuts. Tighten set bolts.

Cost of storage of Existing Bearing Assembly, cost of pins and associated nuts, set bolts, neoprene pads, neoprene mats and cost of all work associated with removal and reinstallation of bearings at this location (except the jacking and cribbing of the truss) is included with "Remove and Reinstall Bearings" unless otherwise noted.

Cost of new plates, fasteners, shims, lead plate, anchor bolts, washers and all other nuts is included with "Furnishing and Erecting Structural Steel".

For Anchor Bolt installation details, see Drawing F29.

Sequence of removal and reinstallation of the bearing:

1) Remove nut and collar from pin prior to jacking truss.
2) Jack and Crib truss. See details on Drawings F4 and F5.
3) Remove bolts connecting top assembly to truss chord. Slide top assembly off and store.
4) Remove pin.
5) Cut heads off bolts attaching the bottom plate of the bottom bearing assembly to the embedded plate. Lift bottom assembly up to allow cutting of the remaining portion of the bolts. Slide bottom assembly out and store.
6) Remove the embedded plate and the anchor bolts.
7) Perform concrete work on Pier.
8) Perform work required on the bottom plate of the bottom bearing assembly. "In-line" rebore the existing bearing assembly to a smooth finished hole with 106 mm ϕ.
9) The bearing shall be reinstalled.
10) The truss shall be lowered.

BILL OF MATERIAL

Item	Unit	Total
Remove & Reinstall Bearings	Each	2

DESIGNED	S. Moynihan
CHECKED	D. Verhulst
DRAWN	John F. Schneller Jr.
CHECKED	S.E.M. D.G.V.

March 10, 1999
EXAMINED Greg J. Kasper ENGINEER OF BRIDGE DESIGN
PASSED Ralph E. Anderson ENGINEER OF BRIDGES AND STRUCTURES

BEARING REMOVAL & REINSTALLATION - PIER 5
F.A. ROUTE 317 SECTION 15B-I-8
PEORIA AND TAZEWELL COUNTIES
STATION 6+791.262

DWG. NO. F17

TAMERAN

STATE OF ILLINOIS
DEPARTMENT OF TRANSPORTATION

ROUTE NO.	SECTION	COUNTY	TOTAL SHEETS	SHEET NO.
F.A. 317	15B-1-8	PEORIA & TAZEWELL	303	216
FED. ROAD DIST. NO. 7	ILLINOIS	FED. AID PROJECT-		

SHEET NO.
SHEETS

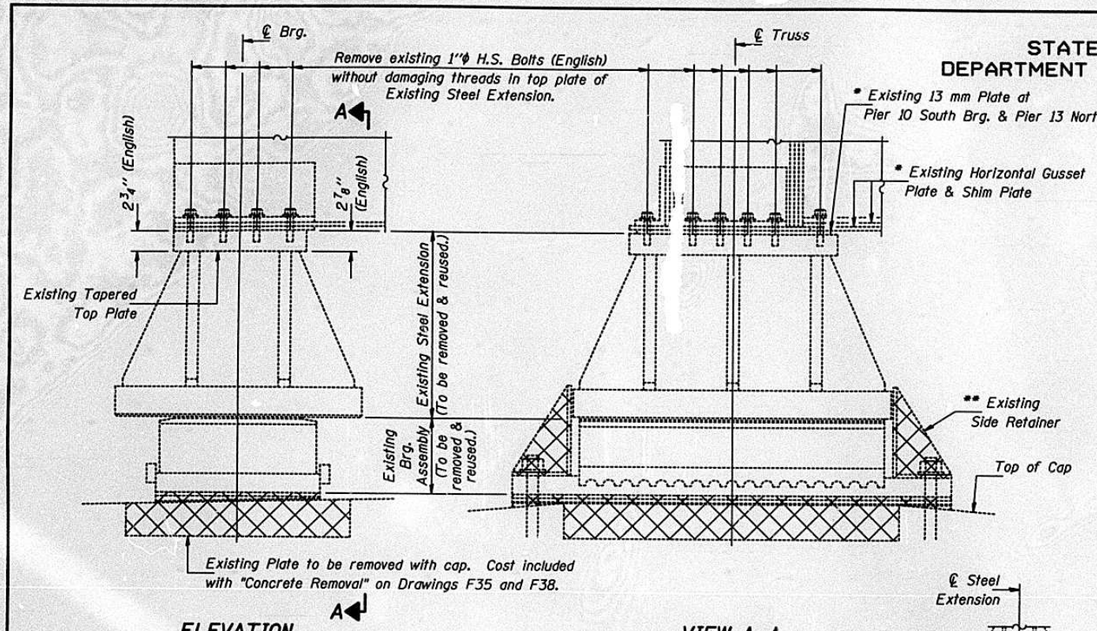

ELEVATION

VIEW A-A

BEARING REMOVAL AT PIERS 10 (EAST) & 13 (WEST)

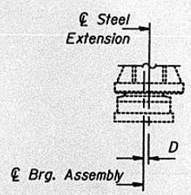

BELOW 10 °C
(Move Brg. away from fixed Brg.)

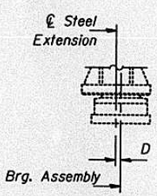

ABOVE 10 °C
(Move Brg. toward fixed Brg.)

SETTING ANCHOR BOLTS AT EXP. BRG.

D= 1 mm per each 10 m of expansion for every 8 °C temp. change from the normal temp. of 10 °C.

Notes:

Cross hatched areas indicate limits of items to be removed and discarded.

The Existing Steel Extension, and Existing Bearing Assembly shall be removed, stored and reinstalled.

New holes shall be drilled in the existing Bottom Plate of the Bearing Assembly prior to reinstallation.

Cost of removal of cross hatched items, storage of Existing Bearing Assembly and Steel Extension, cost of neoprene mat and cost of all work associated with removal and reinstallation of bearings at this location (except the jacking and cribbing of the truss) is included with "Remove and Reinstall Bearing" unless otherwise noted.

Cost of side retainers, threaded studs, shims, lead plate, anchor bolts, nuts, washers and drilling of holes is included with "Furnishing and Erecting Structural Steel".

For Anchor Bolt installation details, see Drawing F29.

* The removal and replacement of the Horizontal Gusset Plates and the 13 mm Plates at Piers 10 and 13 is not included with "Remove and Reinstall Bearings". For details, see Drawing C45. All work required at any location should be coordinated.

** Removal of the existing Side Retainers includes arc gouging of the tack welds used to attach the Side Retainers to the Bottom Bearing Plate. The weld locations shall be ground smooth. Care shall be taken so there is no damage to the existing Bottom Bearing Plate.

*** Verify hole locations. Fit up Bottom Bearing Plate and New Retainer Angles prior to set up in the field to verify that holes line up.

Sequence of removal and reinstallation of the Bearing:

1) Cut Anchor Bolt heads. Do not thermal cut within 3 mm of any Structural Steel that is to be reused. Jack and Crib Truss. See details on Drawings F6, F7, F12 and F13.
2) Remove the existing Steel Extension, existing Bearing Assembly, existing 3 mm Lead Plate and all cross hatched items. Care shall be taken not to damage any Structural Steel that is to be reused. The Existing Steel Extension and Bearing Assembly shall be stored.
3) Perform concrete work on Pier. Perform work on Horizontal Gusset Plate.
4) Perform work required on the Bottom Bearing Plate of the Bearing Assembly.
5) The Steel Extension, Bearing Assembly, New Retainer Angles and all other required items shall be installed.
6) The truss shall be lowered.

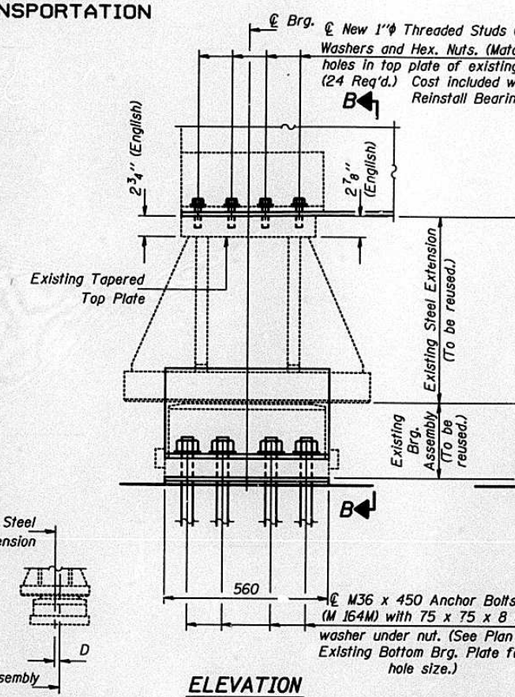

ELEVATION

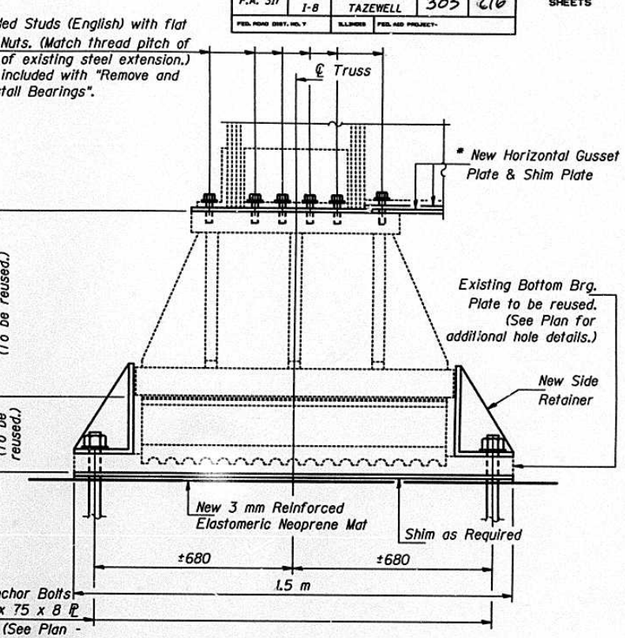

VIEW B-B

BEARING REINSTALLATION AT PIERS 10 (EAST) & 13 (WEST)

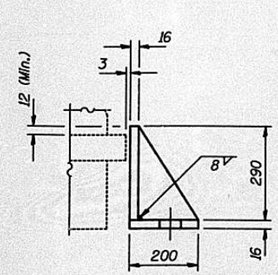

SIDE RETAINER

Equivalent rolled angle with stiffeners will be allowed in lieu of welded plates. Weight included with "Furnishing and Erecting Structural Steel".

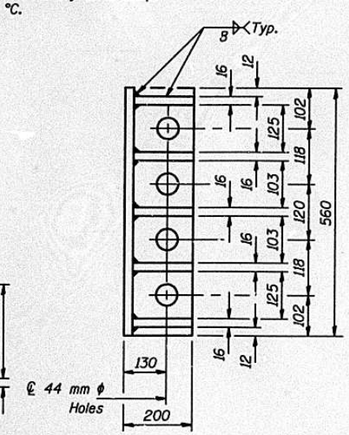

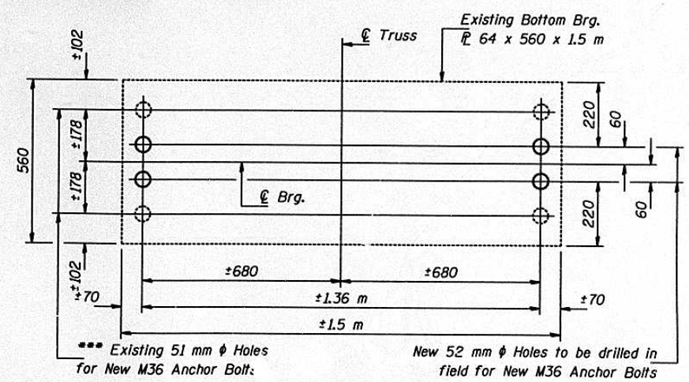

PLAN - EXISTING BOTTOM BRG. PLATE

BILL OF MATERIAL

Item	Unit	Total
Remove & Reinstall Bearings	Each	4

BEARING REMOVAL & REINSTALLATION
PIERS 10 (EAST) & 13 (WEST)
F.A. ROUTE 317 SECTION 15B-1-8
PEORIA AND TAZEWELL COUNTIES
STATION 6+791.262

DWG. NO. F18

DESIGNED	S. Moynihan
CHECKED	D. Verhulst
DRAWN	John F. Schneller Jr.
CHECKED	S.E.M. D.G.V.

March 10, 1999

EXAMINED Raj. S. Kaspar ENGINEER OF BRIDGE DESIGN

PASSED Ralph E. Anderson ENGINEER OF BRIDGES AND STRUCTURES

STATE OF ILLINOIS
DEPARTMENT OF TRANSPORTATION

ROUTE NO.	SECTION	COUNTY	TOTAL SHEETS	SHEET NO.
F.A. 317	15B-1-8	PEORIA & TAZEWELL	303	217
FED. ROAD DIST. NO. 7	ILLINOIS	FED. AID PROJECT-		

SHEET NO.
SHEETS

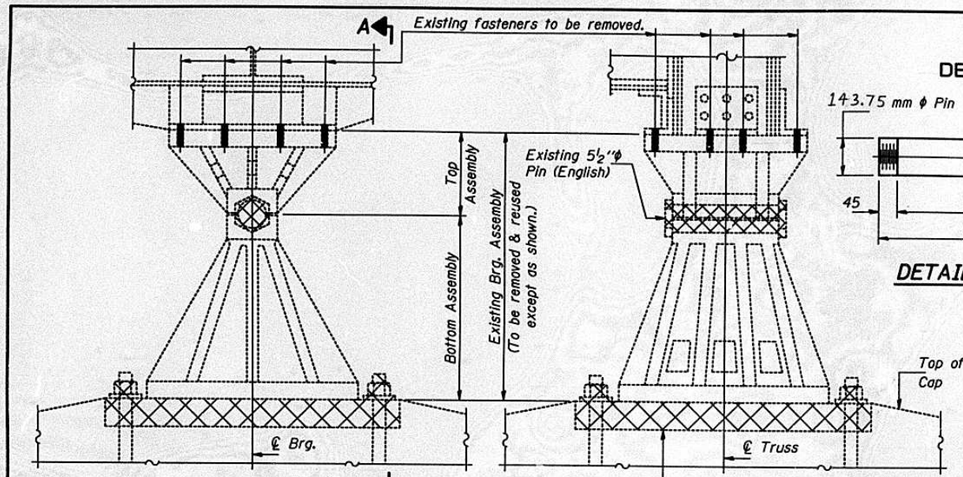

ELEVATION

BEARING REMOVAL AT PIER 12
(1 Required at South Truss)

VIEW A-A

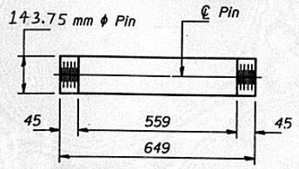

DETAIL OF PIN

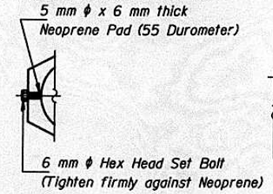

DETAIL "G"

Set Bolts shall conform to the requirements of ASTM A 307 and shall be galvanized according to AASHTO M 232.

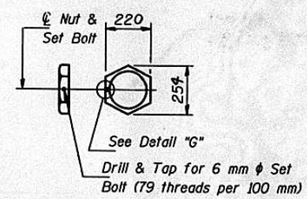

EXTERIOR NUT DETAIL
(2 Required)

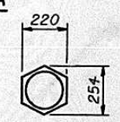

INTERIOR NUT DETAIL
(2 Required)

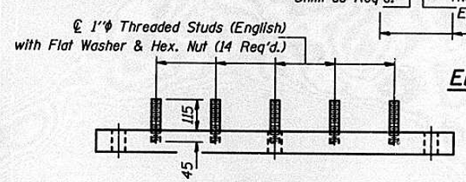

VIEW D-D

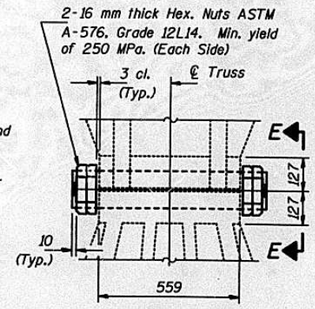

DETAIL "F"

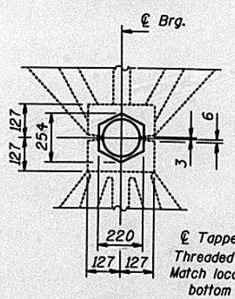

VIEW E-E

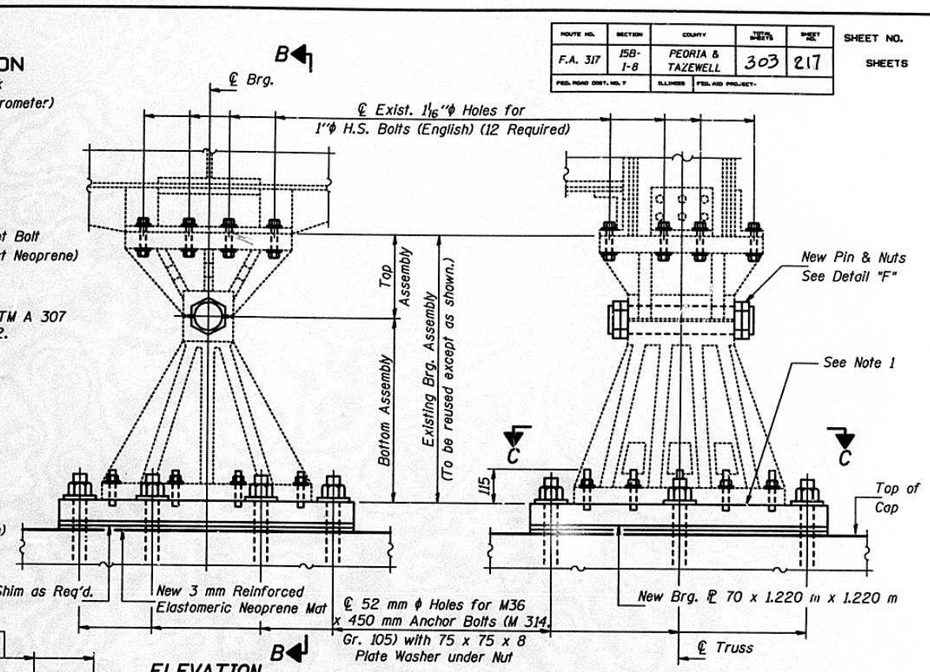

ELEVATION

VIEW B-B

BEARING REINSTALLATION AT PIER 12
(1 Required at South Truss)

Note 1:
Bottom plate of existing bearing assembly shall be inspected for pits and deterioration. Repairs shall be as required by Engineer.

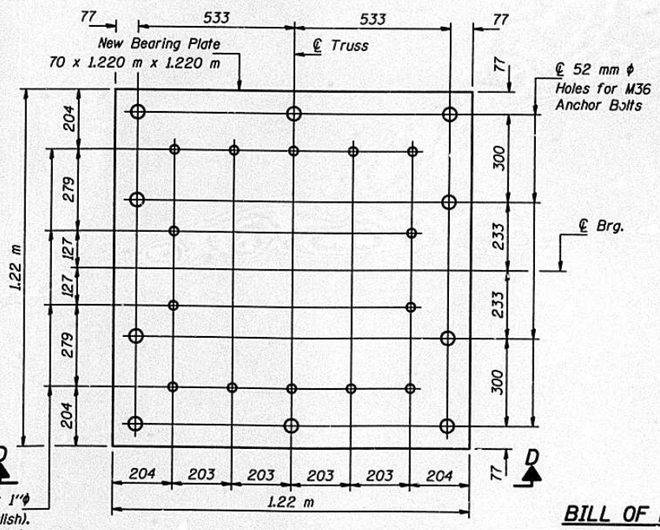

PLAN - NEW BRG. PLATE

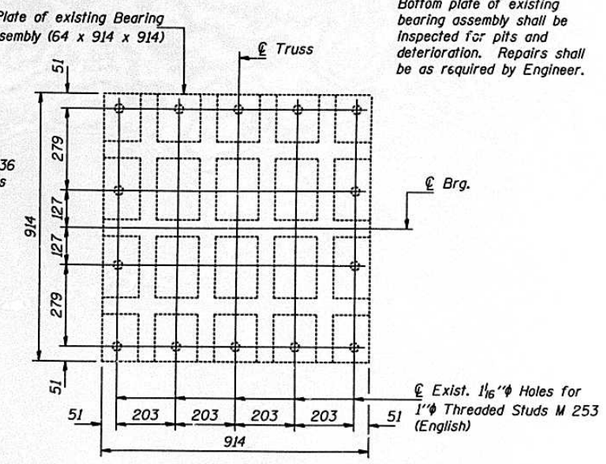

SECTION C-C

Notes:
Cross hatched areas indicate limits of items to be removed and discarded.
Do not thermal cut within 3 mm of any structural steel that is to be reused. Care shall be taken not to damage any Structural Steel that is to be reused.
The Existing Bearing Assembly shall be removed. The Existing Bearing Assembly except for the pin and nuts shall be stored and reinstalled.
The Pins shall be ASTM A276, UNS 21800 (Nitronic 60 or equal). (No step at threads.) 50 threads per 100 mm.
Tighten inside nuts until 3 mm of clearance is provided between the nut and the existing bearing assembly. Tighten outer nuts. Tighten set bolts.
Cost of storage of Existing Bearing Assembly, cost of pins and associated nuts, set bolts, neoprene pads, neoprene mat and cost of all work associated with removal and reinstallation of bearings at this location (except the jacking and cribbing of the truss) is included with "Remove and Reinstall Bearings" unless otherwise noted.
Cost of new plates, fasteners, shims, lead plates, anchor bolts, washers and all other nuts is included with "Furnishing and Erecting Structural Steel".
For Anchor Bolt Installation details, see Drawing F29.

Sequence of removal and reinstallation of the bearing:
1) Remove nut and collar from pin prior to jacking truss.
2) Jack and Crib truss. See details on Drawing F11.
3) Remove bolts connecting top assembly to truss chord. Slide top assembly off and store.
4) Remove pin.
5) Cut heads off bolts attaching the bottom plate of the bottom bearing assembly to the embedded plate. Lift bottom assembly up to allow cutting of the remaining portion of the bolts. Slide bottom assembly out and store.
6) Remove the embedded plate and the anchor bolt.
7) Perform concrete work on Pier.
8) Perform work required on the bottom plate of the bottom bearing assembly. "In-line" rebore the existing bearing assembly to a smooth finished hole with 144 mm φ.
9) The bearings shall be reinstalled.
10) The truss shall be lowered.

DESIGNED	S. Moynihan
CHECKED	D. Verhulst
DRAWN	John F. Schneller Jr.
CHECKED	S.E.M. D.G.V.

March 10, 1999
EXAMINED — ENGINEER OF BRIDGE DESIGN
PASSED — ENGINEER OF BRIDGES AND STRUCTURES

BILL OF MATERIAL

Item	Unit	Total
Remove & Reinstall Bearings	Each	1

BEARING REMOVAL & REINSTALLATION - PIER 12
F.A. ROUTE 317 SECTION 15B-1-8
PEORIA AND TAZEWELL COUNTIES
STATION 6+791.262

DWG. NO. F19

ROUTE NO.	SECTION	COUNTY	TOTAL SHEETS	SHEET NO.
F.A. 317	15B-1-8	PEORIA & TAZEWELL	303	218
FED. ROAD DIST. NO. 7	ILLINOIS	FED. AID PROJECT-		

SHEET NO.
SHEETS

STATE OF ILLINOIS
DEPARTMENT OF TRANSPORTATION

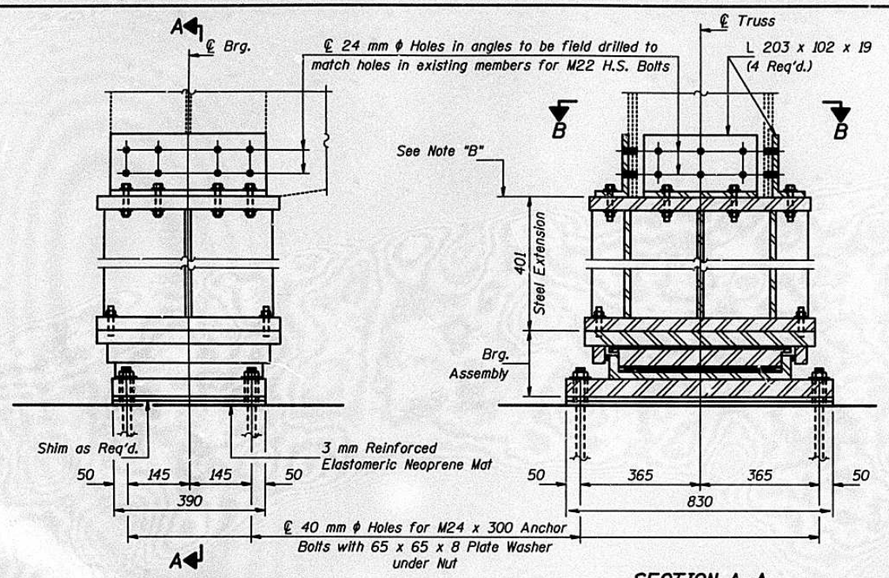

ELEVATION

SECTION A-A

EXPANSION FLOATING BEARING - PIERS 4 (EAST) & 10 (WEST)

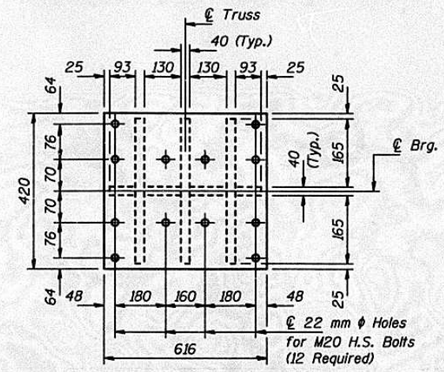

TOP PLATE PLAN
STEEL EXTENSION

Note "A":
Weld may be omitted if Base Cylinder is recessed into Bottom Plate.

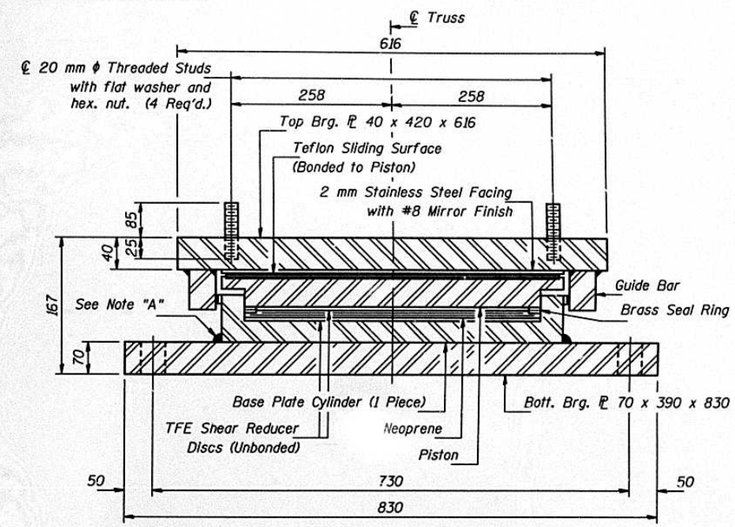

BEARING ASSEMBLY

BEARING DATA		
R_{TOTAL}	(kN)	1340
Lateral Load	(kN)	110
Expansion Length		63.4 m

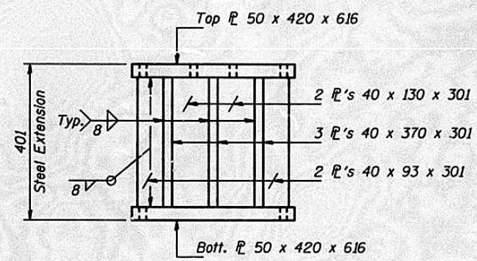

ELEVATION

Notes: All plates of the Bearing Assembly shall be AASHTO M 270M, Grade 345.
Cost of field drilling is included with "Furnishing and Erecting Structural Steel".
Base plate thickness was determined by using a pot diameter of 340 mm.
Cost of neoprene mat is included with "Floating Bearings, Guided Expansion 1500 kN".
For Anchor Bolt installation details see Drawing F29.

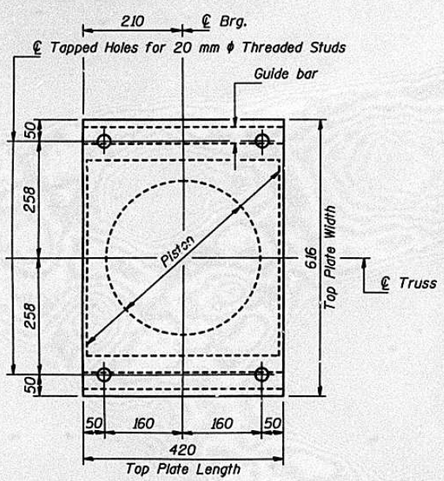

TOP BRG. PL & PISTON PLAN

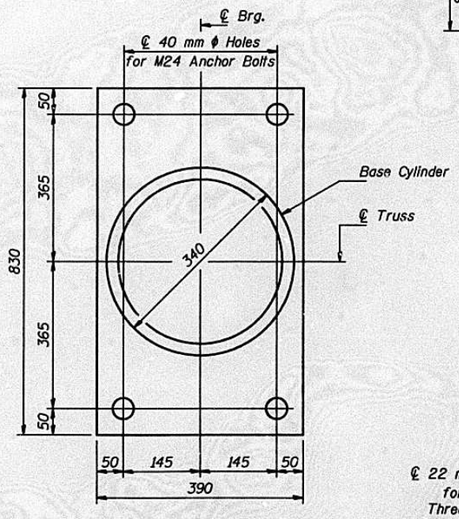

BOTT. BRG. PL &
BASE CYLINDER PLAN

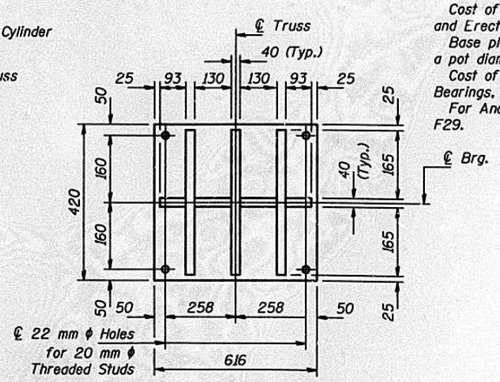

BOTTOM PLATE PLAN
STEEL EXTENSION

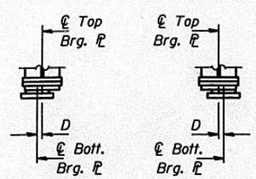

BELOW 10 °C.
(Move bott. brg. plate away from fixed brg.)

ABOVE 10 °C.
(Move bott. brg. plate toward fixed brg.)

SETTING ANCHOR BOLTS AT EXP. BRG.

D=1 mm per each 10 m of expansion for every 8 °C temp. change from the normal temp. of 10 °C.

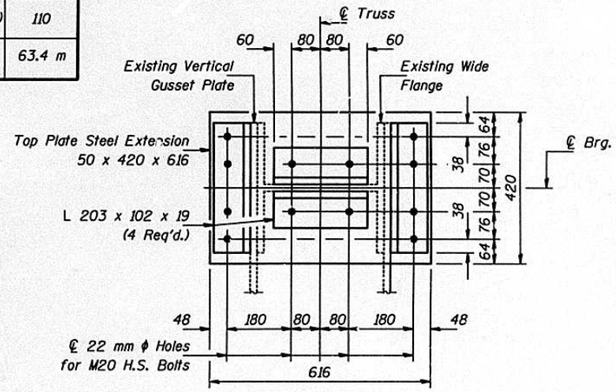

SECTION B-B

BILL OF MATERIAL

Item	Unit	Total
Floating Bearings, Guided Expansion 1500 kN	Each	4

BEARING DETAILS
PIERS 4 (EAST) & 10 (WEST)
F.A. ROUTE 317 SECTION 15B-I-8
PEORIA AND TAZEWELL COUNTIES
STATION 6+791.262

DESIGNED	S. Moynihan
CHECKED	D. Verhulst
DRAWN	John F. Schueller Jr.
CHECKED	S.E.M. D.G.V.

March 10, 1999
EXAMINED Greg J. Kasper ENGINEER OF BRIDGE DESIGN
PASSED Ralph E. Anderson ENGINEER OF BRIDGES AND STRUCTURES

DWG. NO. F20

STATE OF ILLINOIS
DEPARTMENT OF TRANSPORTATION

ROUTE NO.	SECTION	COUNTY	TOTAL SHEETS	SHEET NO.
F.A. 317	15B-1-8	PEORIA & TAZEWELL	303	219
FED. ROAD DIST. NO. 7	ILLINOIS	FED. AID PROJECT-		

SHEET NO.
SHEETS

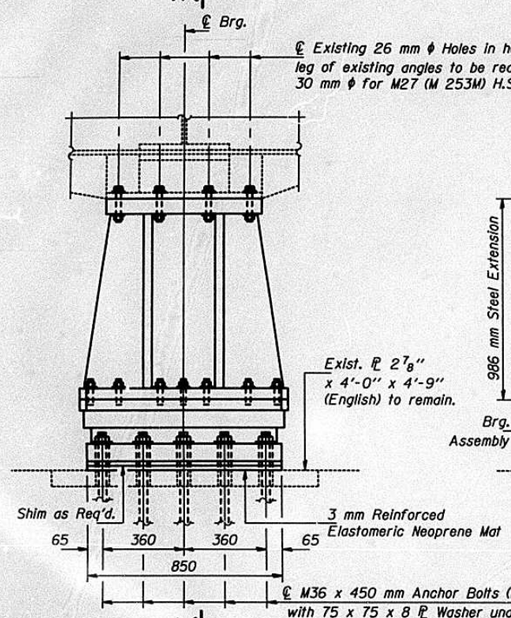

ELEVATION

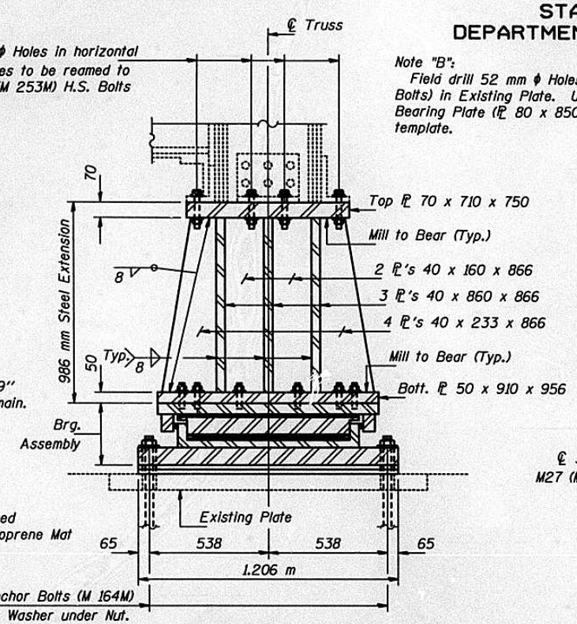

SECTION A-A

EXPANSION FLOATING BEARING - PIER 11

Note "B":
Field drill 52 mm ϕ Holes (For M36 Anchor Bolts) in Existing Plate. Use new Bottom Bearing Plate (PL 80 x 850 x 1.206 m) as a template.

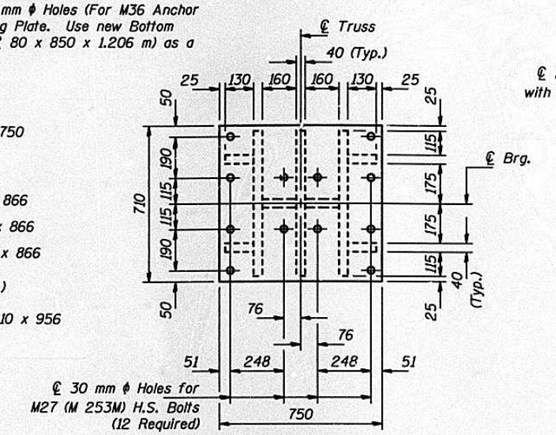

TOP PLATE PLAN
STEEL EXTENSION

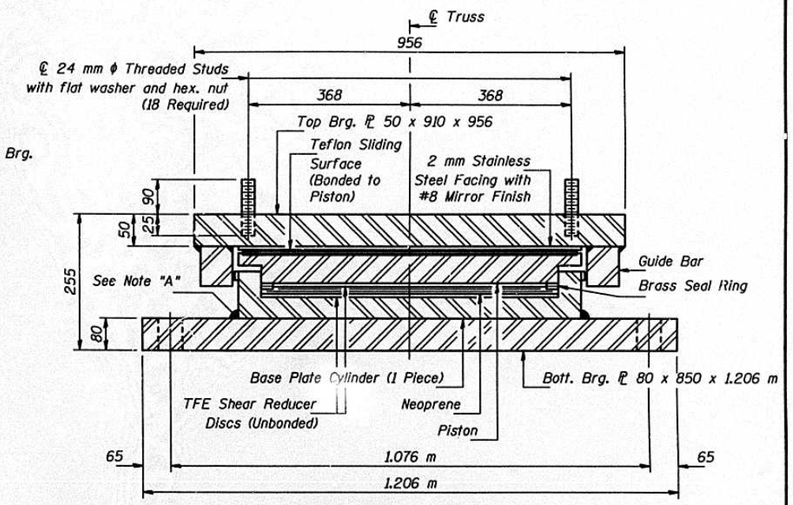

BEARING ASSEMBLY

Note "A":
Weld may be omitted if Base Cylinder is recessed into Bottom Plate.

BEARING DATA		
R_{TOTAL}	(kN)	9850
Lateral Load	(kN)	1024
Expansion Length		163.4 m

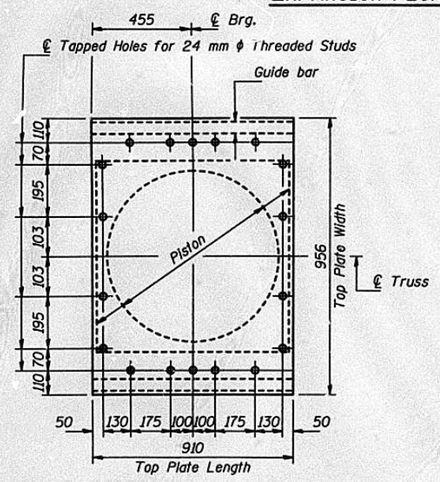

TOP BRG. PL & PISTON PLAN

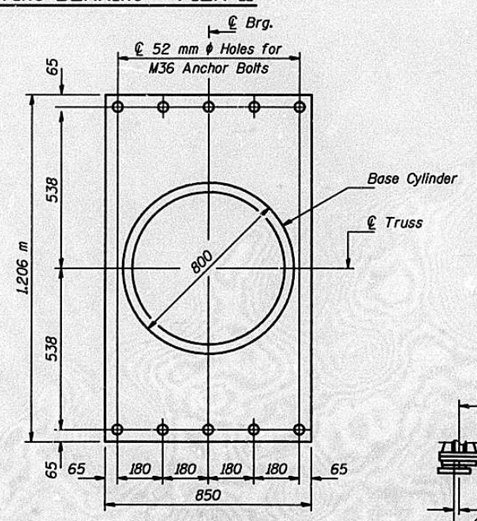

BOTT. BRG. PL &
BASE CYLINDER PLAN

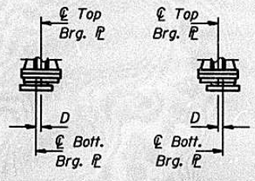

BELOW 10 °C.
(Move bott. brg. plate away from fixed brg.)

ABOVE 10 °C.
(Move bott. brg. plate toward fixed brg.)

SETTING ANCHOR BOLTS AT EXP. BRG.

D=1 mm per each 10 m of expansion for every 8 °C temp. change from the normal temp. of 10 °C.

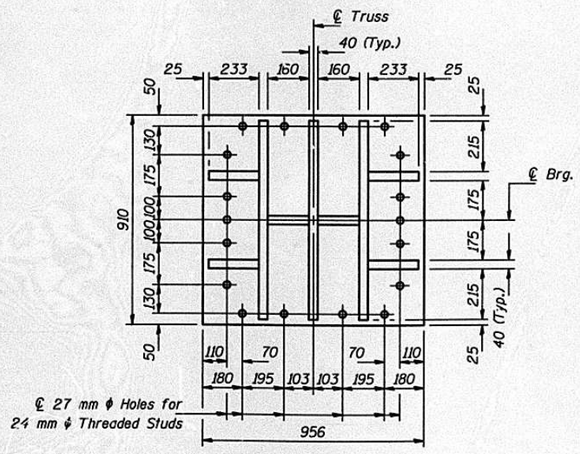

BOTTOM PLATE PLAN
STEEL EXTENSION

Notes: All plates of the Bearing Assembly shall be AASHTO M 270M, Grade 345.
Cost of reaming existing holes and field drilling holes in Existing Plate are included with "Furnishing and Erecting Structural Steel."
Base plate thickness was determined by using a pot diameter of 800 mm.
Cost of neoprene mat is included with "Floating Bearings, Guided Expansion 10000 kN".
For Anchor Bolt installation details see Drawing F29.

BILL OF MATERIAL

Item	Unit	Total
Floating Bearings, Guided Expansion 10000 kN	Each	2

DESIGNED	S. Moynihan
CHECKED	D. Verhulst
DRAWN	John F. Schneller Jr.
CHECKED	S.E.M. D.G.V.

March 10, 1999
EXAMINED Greg J. Kaspar ENGINEER OF BRIDGE DESIGN
PASSED Ralph E. Anderson ENGINEER OF BRIDGES AND STRUCTURES

BEARING DETAILS
PIER 11
F.A. ROUTE 317 SECTION 15B-1-8
PEORIA AND TAZEWELL COUNTIES
STATION 6+791.262

DWG. NO. F21

STATE OF ILLINOIS
DEPARTMENT OF TRANSPORTATION

ROUTE NO.	SECTION	COUNTY	TOTAL SHEETS	SHEET NO.
F.A. 317	15B-1-8	PEORIA & TAZEWELL	303	220
FED. ROAD DIST. NO. 7	ILLINOIS	FED. AID PROJECT-		

SHEET NO.
SHEETS

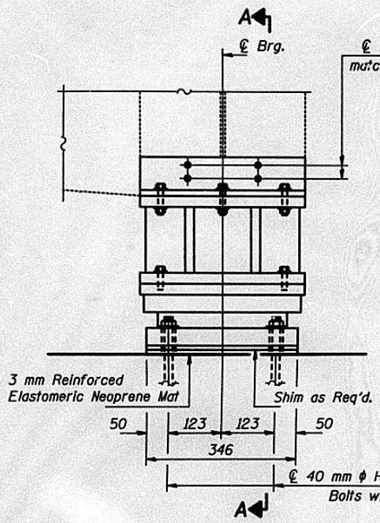

ELEVATION

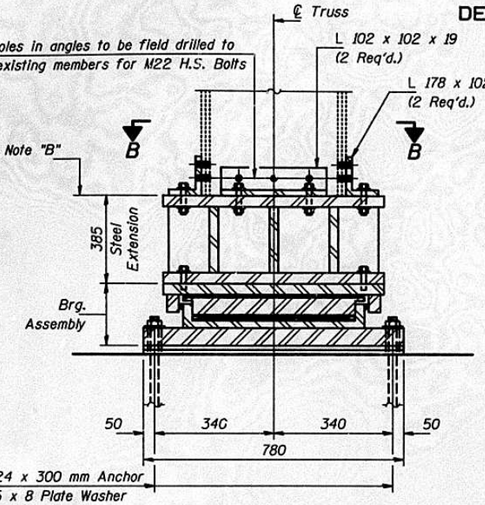

SECTION A-A

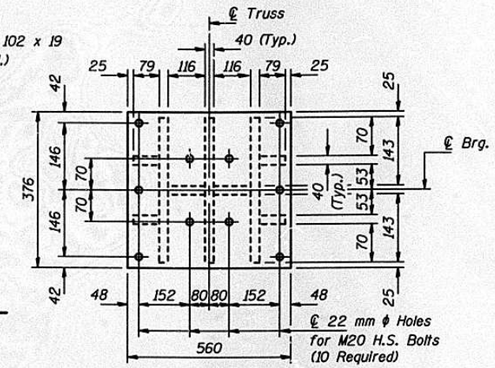

TOP PLATE PLAN
STEEL EXTENSION

EXPANSION FLOATING BEARING - PIER 16 (WEST)

Note "B":
Horizontal leg of new Angles shall be flush with bottom of existing wide flange and vertical gusset plates. (See Section B-B)

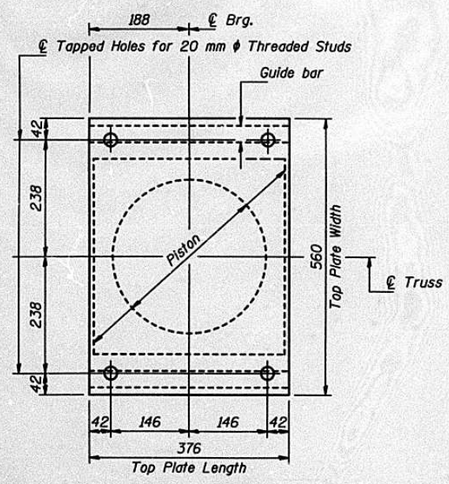

TOP BRG. ℙ & PISTON PLAN

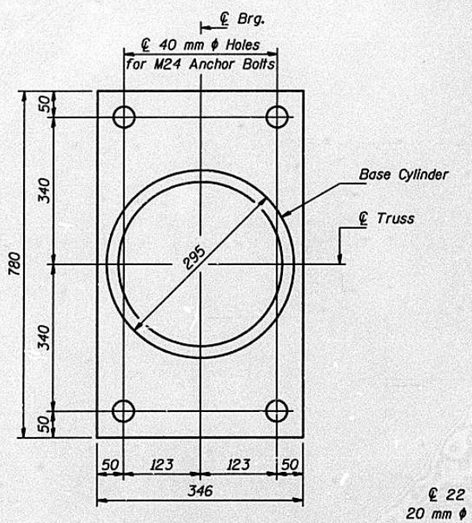

BOTT. BRG. ℙ &
BASE CYLINDER PLAN

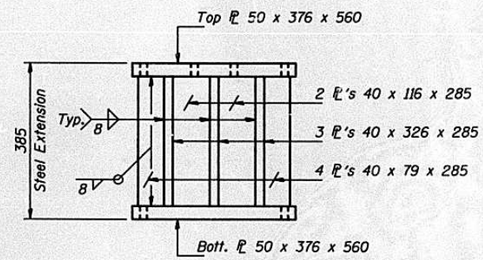

ELEVATION

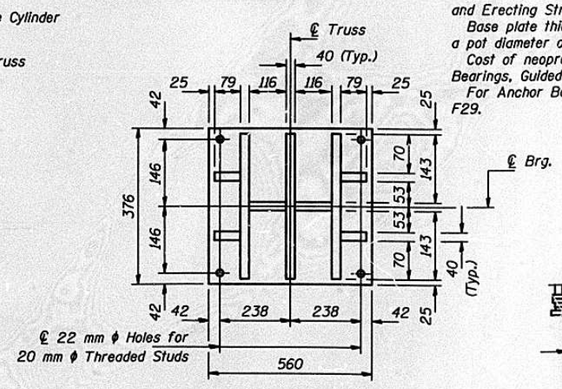

BOTTOM PLATE PLAN
STEEL EXTENSION

Note "A":
Weld may be omitted if Base Cylinder is recessed into Bottom Plate.

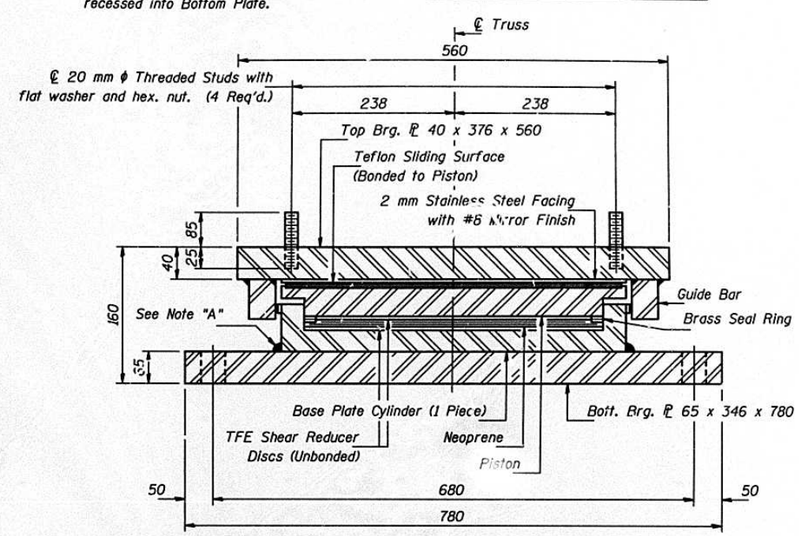

BEARING ASSEMBLY

BEARING DATA	
R_{TOTAL} (kN)	987
Lateral Load (kN)	105
Expansion Length	111.0 m

Notes: All plates of the Bearing Assembly shall be AASHTO M 270M, Grade 345.
Cost of field drilling is included with "Furnishing and Erecting Structural Steel".
Base plate thickness was determined by using a pot diameter of 295 mm.
Cost of neoprene mat is included with "Floating Bearings, Guided Expansion 1000 kN".
For Anchor Bolt installation details see Drawing F29.

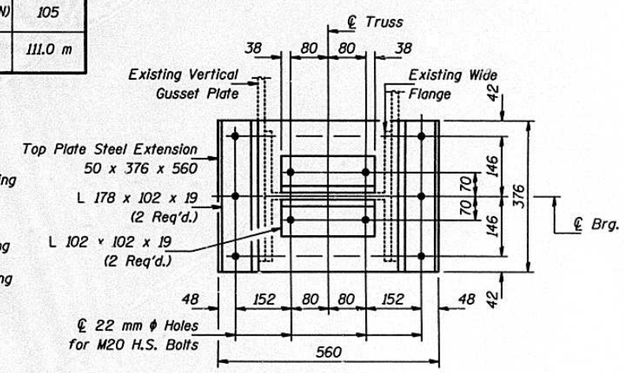

SECTION B-B

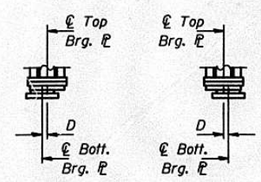

BELOW 10 °C.
(Move bott. brg. plate away from fixed brg.)

ABOVE 10 °C.
(Move bott. brg. plate toward fixed brg.)

SETTING ANCHOR BOLTS AT EXP. BRG.
D=1 mm per each 10 m of expansion for every 8 °C temp. change from the normal temp. of 10 °C.

BILL OF MATERIAL

Item	Unit	Total
Floating Bearings, Guided Expansion 1000 kN	Each	2

BEARING DETAILS
PIER 16 (WEST)
F.A. ROUTE 317 SECTION 15B-1-8
PEORIA AND TAZEWELL COUNTIES
STATION 6+791.262

DESIGNED	S. Moynihan
CHECKED	D. Verhulst
DRAWN	John F. Schneller Jr.
CHECKED	S.E.M. D.G.V.

March 10, 1999
EXAMINED Greg J. Kaspar ENGINEER OF BRIDGE DESIGN
PASSED Ralph E. Anderson ENGINEER OF BRIDGES AND STRUCTURES

DWG. NO. F22

STATE OF ILLINOIS
DEPARTMENT OF TRANSPORTATION

ROUTE NO.	SECTION	COUNTY	TOTAL SHEETS	SHEET NO.
F.A. 317	15B-1-8	PEORIA & TAZEWELL	303	22
FED. ROAD DIST. NO. 7	ILLINOIS	FED. AID PROJECT-		

SHEET NO.
SHEETS

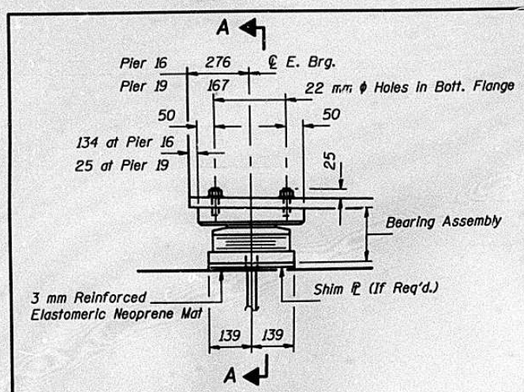

ELEVATION
(Looking North)

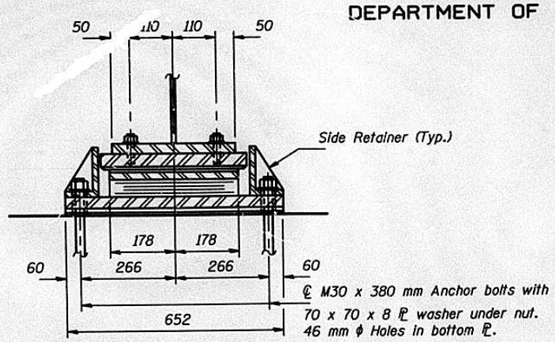

SECTION A-A

TYPE II TFE ELASTOMERIC EXP. BRG. AT PIERS 16 (EAST) & 19 (EAST)

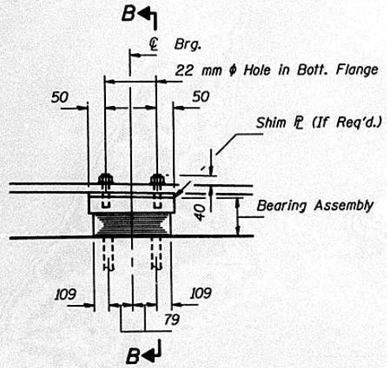

ELEVATION
(Looking North)

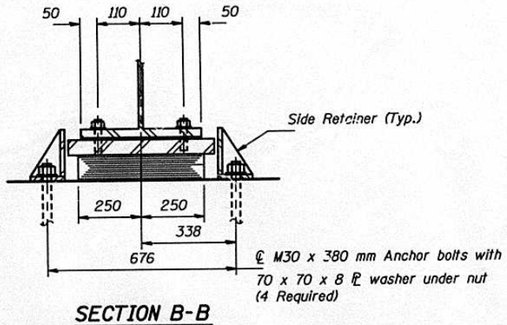

SECTION B-B

TYPE I ELASTOMERIC EXP. BRG. AT PIERS 17 & 20

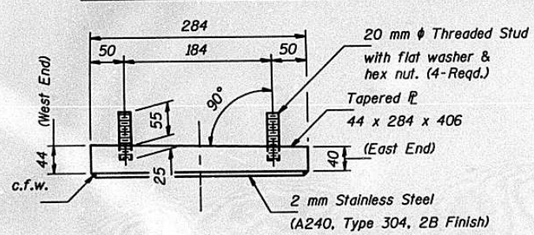

TOP BEARING ASSEMBLY

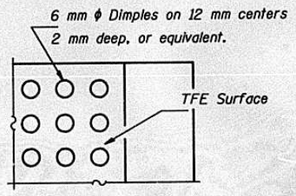

PLAN-TFE SURFACE

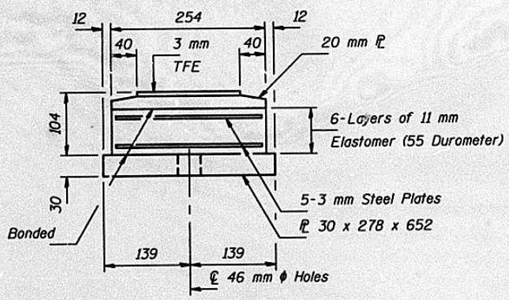

BOTTOM BEARING ASSEMBLY

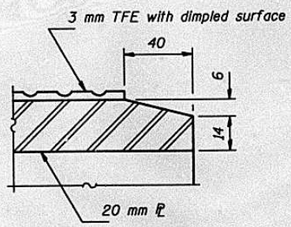

SECTION THRU TFE

Note: The 3 mm TFE sheet shall be bonded directly to the top steel plate with a two-component, medium viscosity epoxy resin, conforming to the requirements of the Federal Specification MMM-A-134, Type I. The bond agent shall be applied on the full area of the contract surfaces. Bonding of 3 mm TFE sheet during vulcanizing process will be permitted provided the process and method of adjusting assembly height is approved by the Engineer.

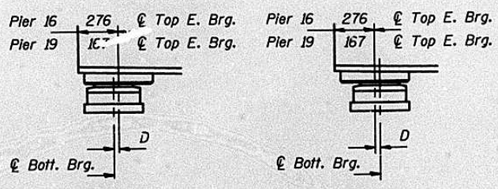

BELOW 10 °C
(Move bott. brg. away from fixed brg.)

ABOVE 10 °C
(Move bott. brg. toward fixed brg.)

SETTING ANCHOR BOLTS AT PIERS 16 (EAST) & 19 (EAST)

D= 1 mm per each 10 m of expansion for every 8 °C temp. change from the normal temp. of 10 °C.

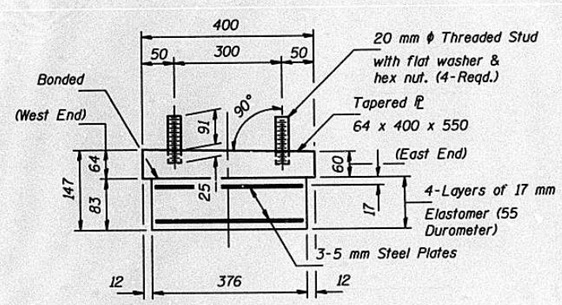

BEARING ASSEMBLY

Note: Shim plates shall not be placed under Bearing Assembly.

Notes: See Drawing F29 for Anchor Bolt installation.
All bearing plates except shim plates and side retainers shall be AASHTO M 270M Grade 345.
Cost of neoprene mat is included with "Elastomeric Bearing Assembly, Type II".

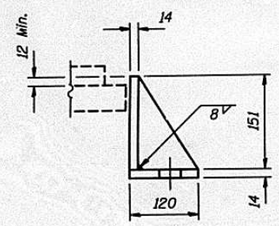

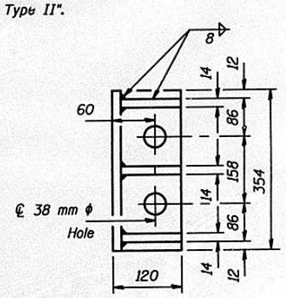

SIDE RETAINER - PIERS 17 & 20

Equivalent rolled angle with stiffeners will be allowed in lieu of welded plates. Weight included with "Furnishing & Erecting Structural Steel".

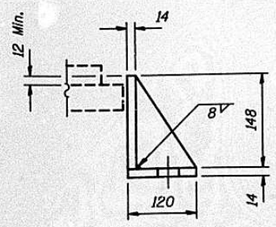

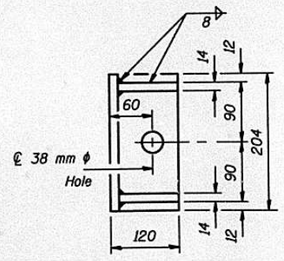

SIDE RETAINER - PIERS 16 (EAST) & 19 (EAST)

Equivalent rolled angle with stiffeners will be allowed in lieu of welded plates. Weight included with "Furnishing & Erecting Structural Steel".

BILL OF MATERIAL

Item	Unit	Total
Elastomeric Bearing Assembly Type I	Each	8
Elastomeric Bearing Assembly Type II	Each	8

BEARING DETAILS
PIERS 16 (EAST), 17, 19 (EAST) & 20
F.A. ROUTE 317 SECTION 15B-I-8
PEORIA AND TAZEWELL COUNTIES
STATION 6+791.262

DWG. NO. F23

DESIGNED	S. Moynihan
CHECKED	D. Verhulst
DRAWN	John F. Schaeller Jr.
CHECKED	S.E.M. D.G.V.

March 10, 1999
EXAMINED Roy J. Kasper ENGINEER OF BRIDGE DESIGN
PASSED Ralph E. Anderson ENGINEER OF BRIDGES AND STRUCTURES

TAMERAN

ROUTE NO.	SECTION	COUNTY	TOTAL SHEETS	SHEET NO.
F.A. 317	15B-1-8	PEORIA & TAZEWELL	303	222
FED. ROAD DIST. NO. 7	ILLINOIS	FED. AID PROJECT-		

SHEET NO.
SHEETS

STATE OF ILLINOIS
DEPARTMENT OF TRANSPORTATION

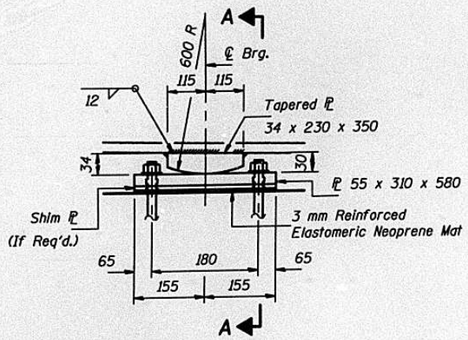

ELEVATION
(Looking North)

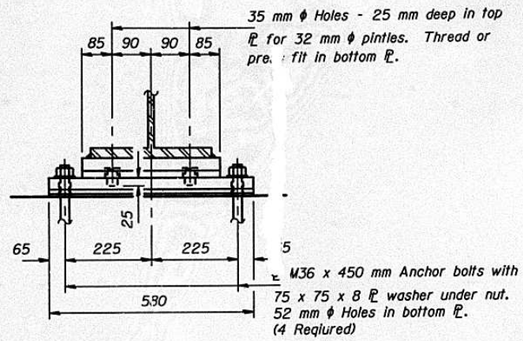

SECTION A-A

FIXED BEARING AT PIERS 18 & 21

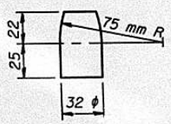

PINTLE

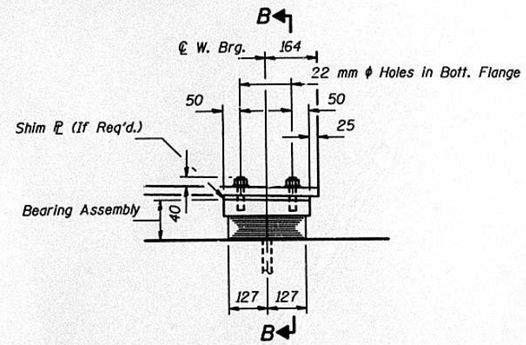

ELEVATION
(Looking North)

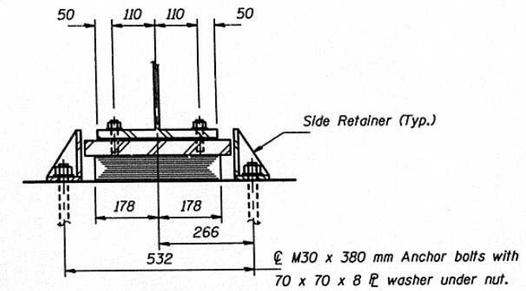

SECTION B-B

TYPE I ELASTOMERIC EXP. BRG. AT PIERS 19 (WEST) & 22 (WEST)

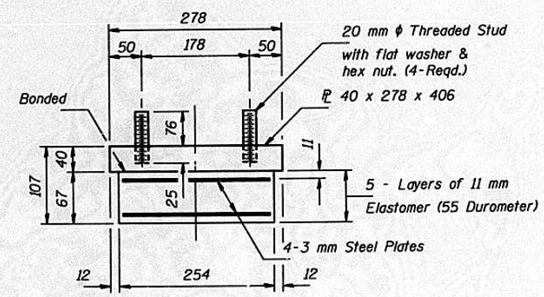

BEARING ASSEMBLY

Note: Shim plates shall not be placed under Bearing Assembly.

Notes: Anchor bolts at fixed bearings may be built into the masonry.
See Drawing F29 for Anchor Bolt installation.
The Pintles and all bearing plates except shim plates and side retainers shall be AASHTO M 270M Grade 345.
Cost of neoprene mat is included with "Furnishing & Erecting Structural Steel".

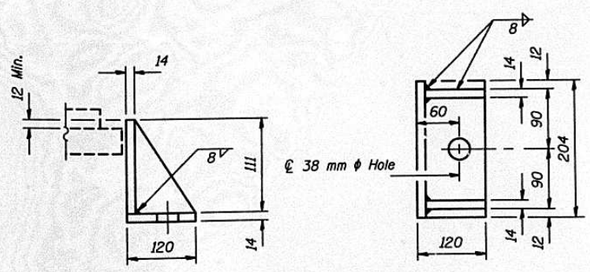

SIDE RETAINER

Equivalent rolled angle with stiffeners will be allowed in lieu of welded plates. Weight included with "Furnishing & Erecting Structural Steel".

BILL OF MATERIAL

Item	Unit	Total
Elastomeric Bearing Assembly Type I	Each	8

BEARING DETAILS
PIERS 18, 19 (WEST), 21 & 22 (WEST)
F.A. ROUTE 317 SECTION 15B-I-8
PEORIA AND TAZEWELL COUNTIES
STATION 6+791.262

DWG. NO. F24

DESIGNED	S. Moynihan
CHECKED	D. Verhulst
DRAWN	John F. Schneller Jr.
CHECKED	S.E.M. D.G.V.

March 10, 1999
EXAMINED Greg J. Kaspar ENGINEER OF BRIDGE DESIGN
PASSED Ralph E. Anderson ENGINEER OF BRIDGES AND STRUCTURES

TAMERAN

STATE OF ILLINOIS
DEPARTMENT OF TRANSPORTATION

ROUTE NO.	SECTION	COUNTY	TOTAL SHEETS	SHEET NO.
F.A. 317	158-1-8	PEORIA & TAZEWELL	303	223
FED. ROAD DIST. NO. 7		ILLINOIS	FED. AID PROJECT-	

SHEET NO.
SHEETS

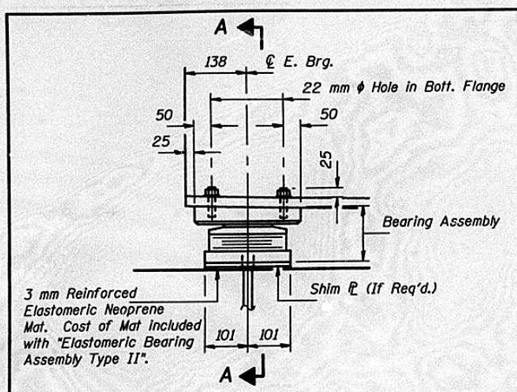

ELEVATION
(Looking North)

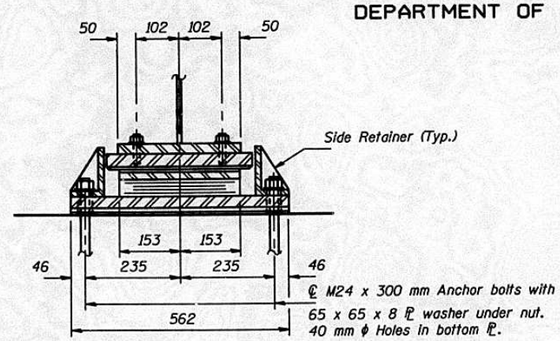

SECTION A-A

TYPE II TFE ELASTOMERIC EXP. BRG. AT PIERS 22 (EAST) AND 25 (EAST)

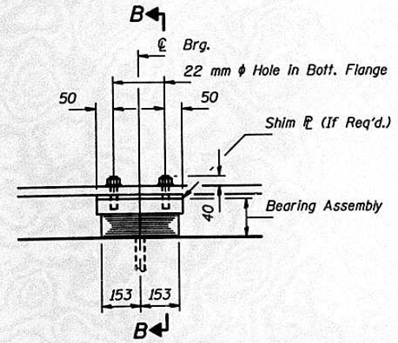

ELEVATION

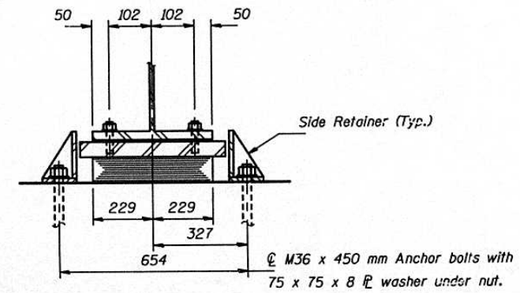

SECTION B-B

TYPE I ELASTOMERIC EXP. BRG. AT PIERS 23 AND 26

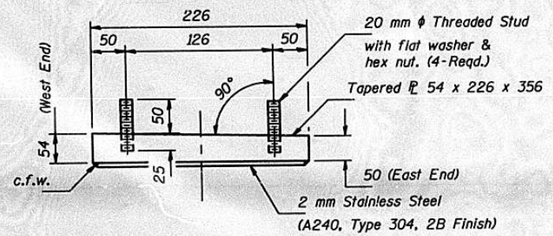

TOP BEARING ASSEMBLY

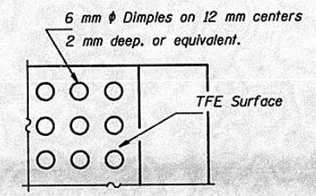

PLAN-TFE SURFACE

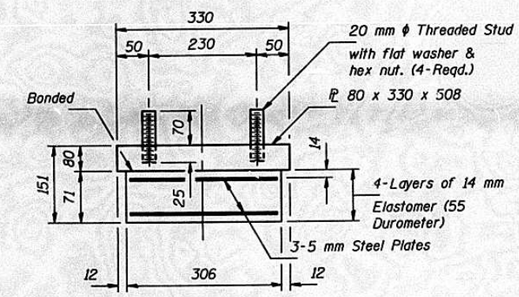

BEARING ASSEMBLY

Note: Shim plates shall not be placed under Bearing Assembly.

Note: See Drawing F29 for Anchor Bolt installation.

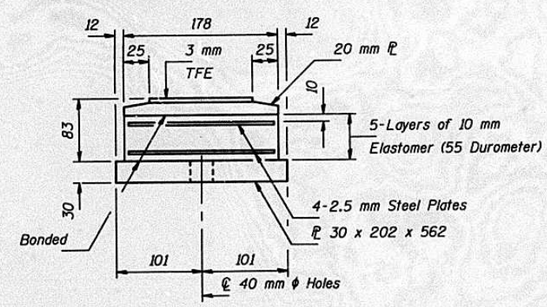

BOTTOM BEARING ASSEMBLY

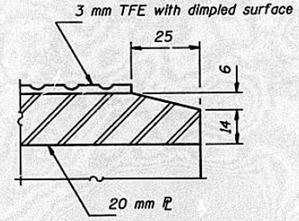

SECTION THRU TFE

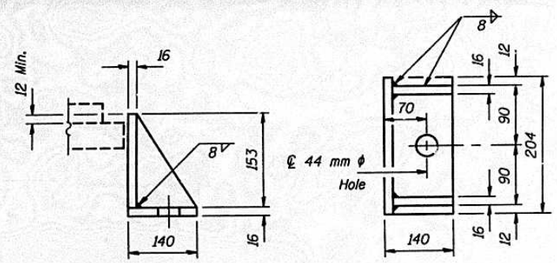

SIDE RETAINER - PIERS 23 AND 26

Equivalent rolled angle with stiffeners will be allowed in lieu of welded plates. Weight included with "Furnishing & Erecting Structural Steel".

Note: The 3 mm TFE sheet shall be bonded directly to the top steel plate with a two-component, medium viscosity epoxy resin, conforming to the requirements of the Federal Specification MMM-A-134, Type I. The bond agent shall be applied on the full area of the contract surfaces. Bonding of 3 mm TFE sheet during vulcanizing process will be permitted provided the process and method of adjusting assembly height is approved by the Engineer.

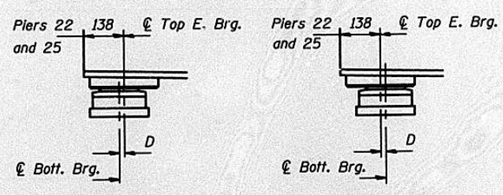

BELOW 10 °C
(Move bott. brg. away from fixed brg.)

ABOVE 10 °C
(Move bott. brg. toward fixed brg.)

SETTING ANCHOR BOLTS AT PIERS 22 (EAST) AND 25 (EAST)

D= 1 mm per each 10 m of expansion for every 8 °C temp. change from the normal temp. of 10 °C.

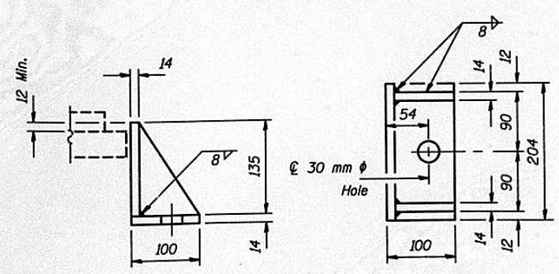

SIDE RETAINER - PIERS 22 (EAST) AND 25 (EAST)

Equivalent rolled angle with stiffeners will be allowed in lieu of welded plates. Weight included with "Furnishing & Erecting Structural Steel".

BILL OF MATERIAL

Item	Unit	Total
Elastomeric Bearing Assembly Type I	Each	10
Elastomeric Bearing Assembly Type II	Each	10

BEARING DETAILS
PIERS 22 (EAST), 23, 25 (EAST) AND 26
F.A. ROUTE 317 SECTION 15B-I-8
PEORIA AND TAZEWELL COUNTIES
STATION 6+791.262

DWG. NO. F25

DESIGNED	S. Moynihan
CHECKED	D. Verhulst
DRAWN	John F. Schneller Jr.
CHECKED	S.E.M. D.G.V.

March 10, 1999
EXAMINED Raj S. Kasper ENGINEER OF BRIDGE DESIGN
PASSED Ralph E. Anderson ENGINEER OF BRIDGES AND STRUCTURES

ROUTE NO.	SECTION	COUNTY	TOTAL SHEETS	SHEET NO.
F.A. 317	15B-1-8	PEORIA & TAZEWELL	303	224
FED. ROAD DIST. NO. 7	ILLINOIS	FED. AID PROJECT-		

SHEET NO.
SHEETS

STATE OF ILLINOIS
DEPARTMENT OF TRANSPORTATION

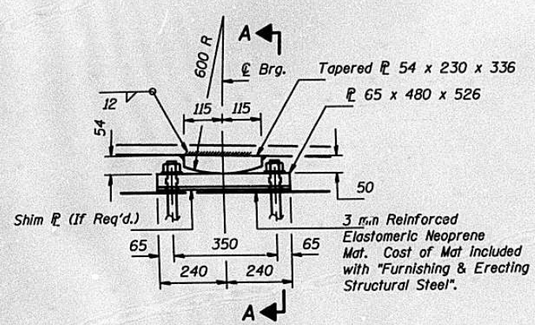

ELEVATION
(Looking North)

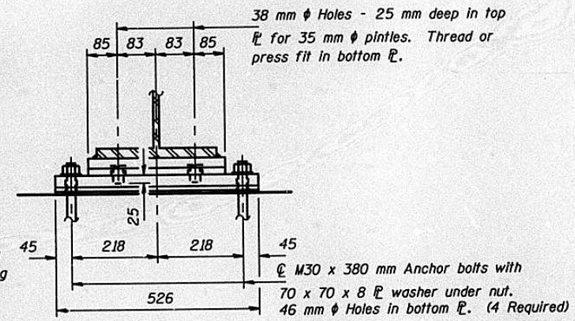

SECTION A-A

FIXED BEARING AT PIERS 24 & 27

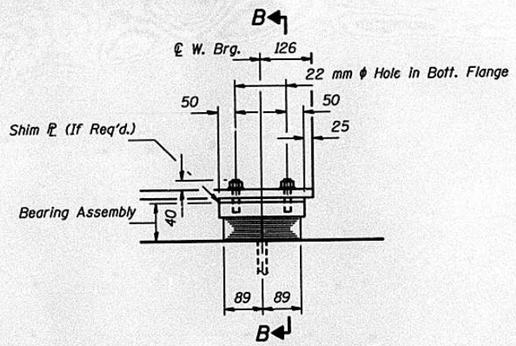

ELEVATION
(Looking North)

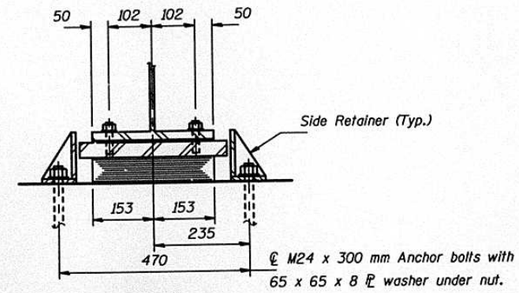

SECTION B-B

TYPE I ELASTOMERIC EXP. BRG. AT PIER 25 (WEST)

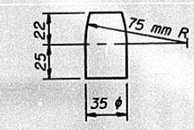

PINTLE

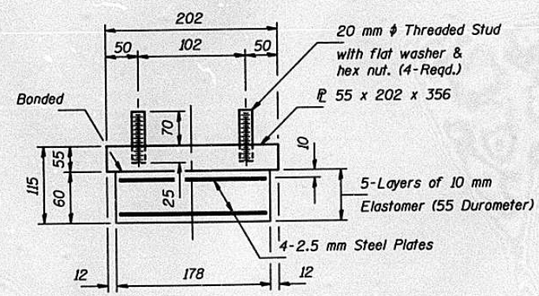

BEARING ASSEMBLY

Note: Shim plates shall not be placed under Bearing Assembly.

Notes: See Drawing F29 for Anchor Bolt installation. Anchor bolts at fixed bearings may be built into the masonry.

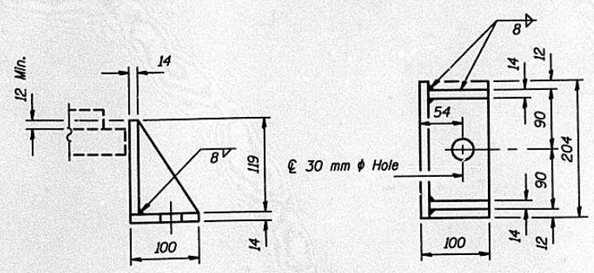

SIDE RETAINER

Equivalent rolled angle with stiffeners will be allowed in lieu of welded plates. Weight included with "Furnishing & Erecting Structural Steel".

BILL OF MATERIAL

Item	Unit	Total
Elastomeric Bearing Assembly Type I	Each	5

BEARING DETAILS
PIERS 24, 25 (WEST) & 27
F.A. ROUTE 317 SECTION 15B-1-8
PEORIA AND TAZEWELL COUNTIES
STATION 6+791.262

DWG. NO. F26

DESIGNED	S. Moynihan
CHECKED	D. Verhulst
DRAWN	John F. Schneller Jr.
CHECKED	S.E.M. D.G.V.

March 10, 1999
EXAMINED Greg J. Kasper ENGINEER OF BRIDGE DESIGN
PASSED Ralph E. Anderson ENGINEER OF BRIDGES AND STRUCTURES

225

ROUTE NO.	SECTION	COUNTY	TOTAL SHEETS	SHEET NO.	SHEET NO.
F.A. 317	15B-1-8	PEORIA & TAZEWELL	303	225	SHEETS
FED. ROAD DIST. NO. 7	ILLINOIS	FED. AID PROJECT-			

STATE OF ILLINOIS
DEPARTMENT OF TRANSPORTATION

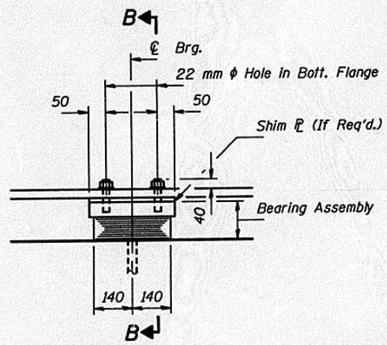

ELEVATION

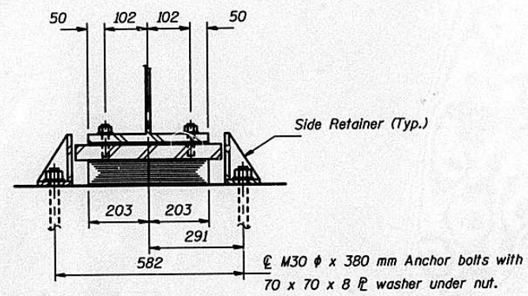

SECTION B-B

TYPE I ELASTOMERIC EXP. BRG. AT PIER 28

Note: See Drawing F29 for Anchor Bolt installation.

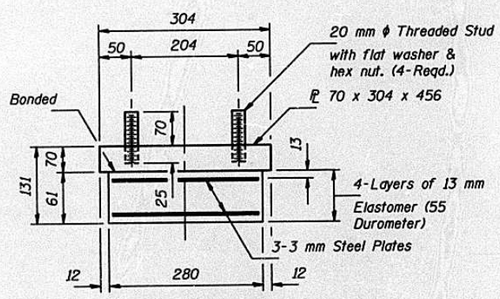

BEARING ASSEMBLY

Note: Shim plates shall not be placed under Bearing Assembly.

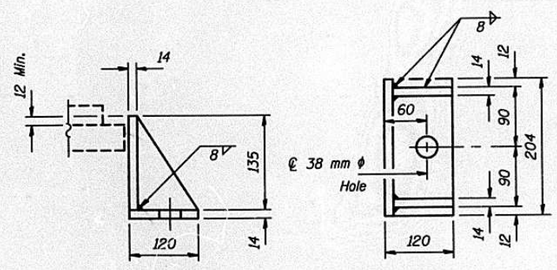

SIDE RETAINER - PIER 28

Equivalent rolled angle with stiffeners will be allowed in lieu of welded plates. Weight included with "Furnishing & Erecting Structural Steel".

BILL OF MATERIAL

Item	Unit	Total
Elastomeric Bearing Assembly Type I	Each	5

DESIGNED	S. Moynihan
CHECKED	D. Verhulst
DRAWN	John F. Schneller Jr.
CHECKED	S.E.M. D.G.V.

March 10, 1999

EXAMINED Raj J. Kapur
ENGINEER OF BRIDGE DESIGN

PASSED Ralph E. Anderson
ENGINEER OF BRIDGES AND STRUCTURES

BEARING DETAILS
PIER 28
F.A. ROUTE 317 SECTION 15B-I-8
PEORIA AND TAZEWELL COUNTIES
STATION 6+791.262

DWG. NO. F27

STATE OF ILLINOIS
DEPARTMENT OF TRANSPORTATION

ROUTE NO.	SECTION	COUNTY	TOTAL SHEETS	SHEET NO.
F.A. 317	15B-1-8	PEORIA & TAZEWELL	303	226
FED. ROAD DIST. NO. 7	ILLINOIS	FED. AID PROJECT-		

SHEET NO.
SHEETS

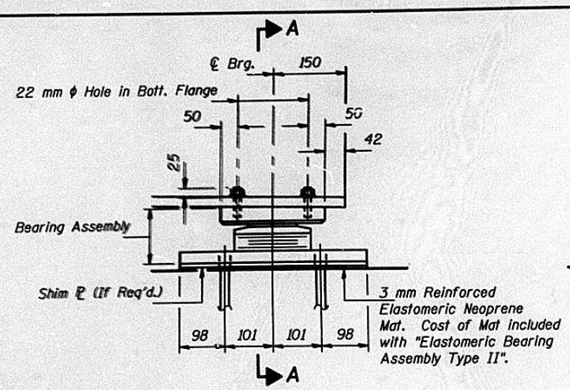

ELEVATION
(Looking North)

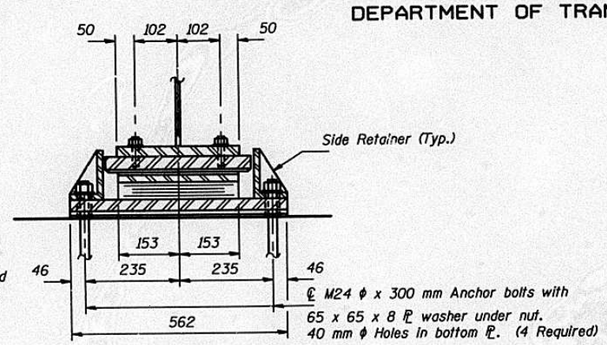

SECTION A-A

TYPE II TFE ELASTOMERIC EXP. BRG. AT EAST ABUTMENT

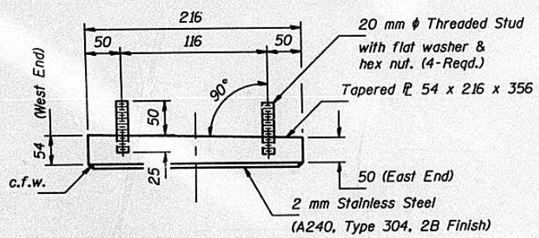

TOP BEARING ASSEMBLY

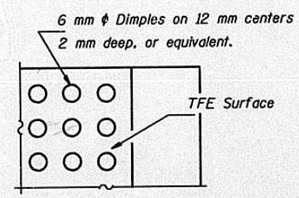

PLAN-TFE SURFACE

Note: See Drawing F29 for Anchor Bolt installation.

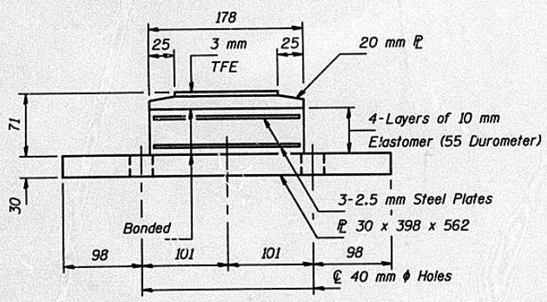

BOTTOM BEARING ASSEMBLY

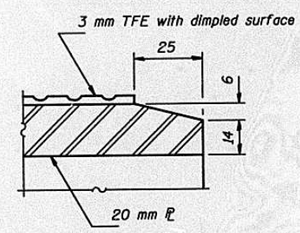

SECTION THRU TFE

Note: The 3 mm TFE sheet shall be bonded directly to the top steel plate with a two-component, medium viscosity epoxy resin, conforming to the requirements of the Federal Specification MMM-A-134, Type I. The bond agent shall be applied on the full area of the contract surfaces. Bonding of 3 mm TFE sheet during vulcanizing process will be permitted provided the process and method of adjusting assembly height is approved by the Engineer.

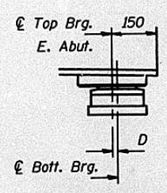

BELOW 10 °C
(Move bott. brg. away from fixed brg.)

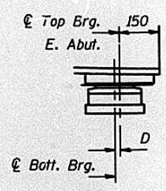

ABOVE 10 °C
(Move bott. brg. toward fixed brg.)

SETTING ANCHOR BOLTS AT EAST ABUTMENT

D= 1 mm per each 10 m of expansion for every 8 °C temp. change from the normal temp. of 10 °C.

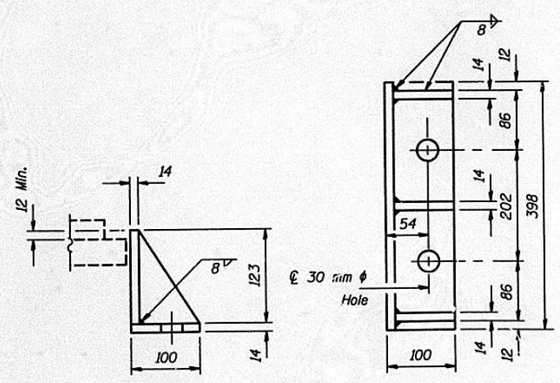

SIDE RETAINER - EAST ABUTMENT

Equivalent rolled angle with stiffeners will be allowed in lieu of welded plates. Weight included with "Furnishing & Erecting Structural Steel".

BILL OF MATERIAL

Item	Unit	Total
Elastomeric Bearing Assembly Type II	Each	5

BEARING DETAILS
EAST ABUTMENT
F.A. ROUTE 317 SECTION 15B-I-8
PEORIA AND TAZEWELL COUNTIES
STATION 6+791.262

DWG. NO. F28

DESIGNED	S. Moynihan
CHECKED	D. Verhulst
DRAWN	John F. Schneller Jr.
CHECKED	S.E.M. D.G.V.

March 10, 1999
EXAMINED Raj. D. Kasar ENGINEER OF BRIDGE DESIGN
PASSED Ralph E. Anderson ENGINEER OF BRIDGES AND STRUCTURES

STATE OF ILLINOIS
DEPARTMENT OF TRANSPORTATION

ROUTE NO.	SECTION	COUNTY	TOTAL SHEETS	SHEET NO.	
F.A. 317	15B-1-8	PEORIA & TAZEWELL	303	227	SHEET NO.
FED. ROAD DIST. NO. 7	ILLINOIS	FED. AID PROJECT-			SHEETS

D	E	H	K	"d"
24	27	20	44	6
30	33	26	51	10
36	39	32	54	13
48	51	44	73	15
64	67	60	86	25

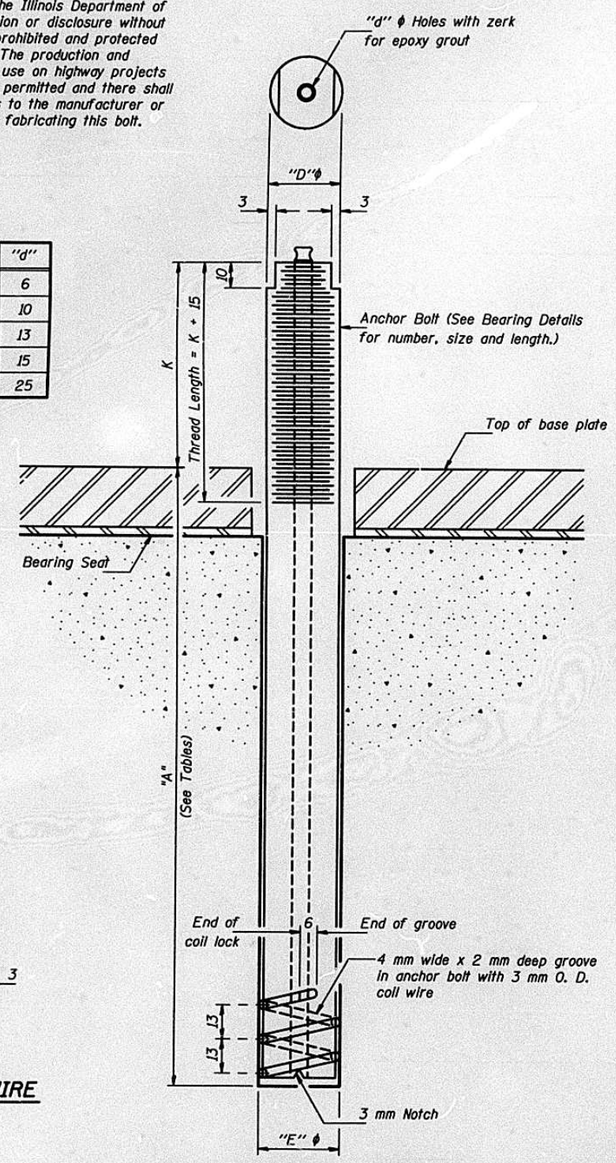

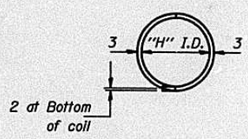

PLAN-COIL WIRE

ILLINOIS COIL-LOCK ANCHOR BOLT

MATERIALS FOR ILLINOIS COIL-LOCK ANCHOR BOLT

The anchor bolt shall be fabricated from cold drawn or hot finished seamless carbon steel mechanical tubing conforming to ASTM A 519, Grade 1026, CW and supplied with hexagonal nuts and cut washers.

The coil wire shall be made of any suitable soft steel wire.

The finished anchor bolt shall be cleaned of rust and other foreign materials and wrapped or packaged to prevent contamination until they are installed.

The epoxy grout shall be a two-component, epoxy resin bonding system comforming to ASTM C 881, Type I, Grade 1 and of a Class suitable for the temperature at installation.

INSTALLATION PROCEDURE for the ILLINOIS COIL-LOCK ANCHOR BOLT

1. With the coil wire in place, the bolt shall be inserted into the hole and turned clockwise to a snug fit in the hole. Nut and washer shall be placed on the bolt. The nut shall be tensioned until the steel base plates are held securely to the concrete bearing seat.
2. Epoxy grout shall be pumped through the zerk fitting with a pressure gun. Pumping shall continue until the epoxy overflows the hole around the bolt shank. After pumping is discontinued, excess epoxy shall be immediately wiped off.

ALTERNATE ANCHOR BOLTS

The Contractor may use, at his option, the capsule or the adhesive cartridge type anchor rods that have been previously tested and given a prior approval by the Department. The Contractor shall install these anchor rods in pre-drilled holes according to the manufacturer's recommendations and procedures.

The capsule or the adhesive cartridge type anchor rods shall be a two part system composed of:

1. A threaded rod stud with nut and washer of the type specified.
2. A sealed glass capsule or a sealed glass adhesive cartridge containing premeasured amounts of the adhesive chemical.

DIMENSION "A" APPROACHES

Location	"A"	Type
Piers 16 (East), 17, 19 (West) 19 (East), 20, 22 (West), 24, 27 and 28	329	A307
Piers 18, 21, 23 and 26	396	A307
Piers 22 (East), 25 (West), 25 (East) and East Abutment	256	A307

DIMENSION "A" TRUSSES

Location	"A"	Type
Piers 4 (East), 10 (West) and 16 (West)	256	A307
Piers 5 and 12	396	M 314, Gr. 105
Piers 10 (East), 11 and 13 (West)	396	M 164M
Wind Anchorage Assembly at Piers 10 and 13	396	M 164M

GENERAL NOTES

Holes in the masonry for anchor bolts shall be drilled through the base plates to the diameter and depth shown or according to the manufacturer's recommendation after beams or girders have been erected and adjusted.

Prior to setting the bolts, the holes shall be dry and all dust and loose particles shall be removed by the use of compressed air or vacuuming.

The anchor bolts, furnished and installed and including the epoxy grout or capsules shall not be paid for separately but shall be included in the unit bid price for "Furnishing and Erecting Structural Steel".

DESIGNED	S. Moynihan
CHECKED	D. Verhulst
DRAWN	John F. Schneller Jr.
CHECKED	S.E.M. D.G.V.

March 10, 1999

EXAMINED Greg J. Kasper ENGINEER OF BRIDGE DESIGN

PASSED Ralph E. Anderson ENGINEER OF BRIDGES AND STRUCTURES

ABB-1 (M) 4-30-97

ANCHOR BOLT DETAILS
F.A. ROUTE 317 SECTION 15B-1-8
PEORIA AND TAZEWELL COUNTIES
STATION 6+791.262

DWG. NO. F29

STATE OF ILLINOIS
DEPARTMENT OF TRANSPORTATION

ROUTE NO.	SECTION	COUNTY	TOTAL SHEETS	SHEET NO.
FA 317	15B-1-8	TAZEWELL	303	228
FED. ROAD DIST. NO. 7	ILLINOIS	FED. AID PROJECT-		

SHEET NO.
SHEETS

Note:
Existing reinforcement extending into new construction shall be cleaned, straightened and incorporated into new construction. Cost included with "Concrete Removal".

Note A:
2-152 mm ϕ x 762 mm pipe sleeves with 38 mm ϕ x 1.321 m anchor rods embedded in concrete under each existing bearing. Flame cut to removal line. If concrete in sleeve is deteriorated, remove and replace with a grout approved by the Department. Cost included with "Concrete Removal".

LEGEND

Concrete Removal

Formed Concrete Repair (Depth Equal To or Less Than 125 mm)

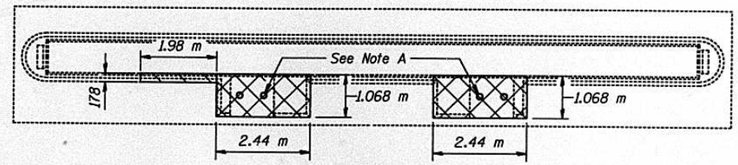

PLAN

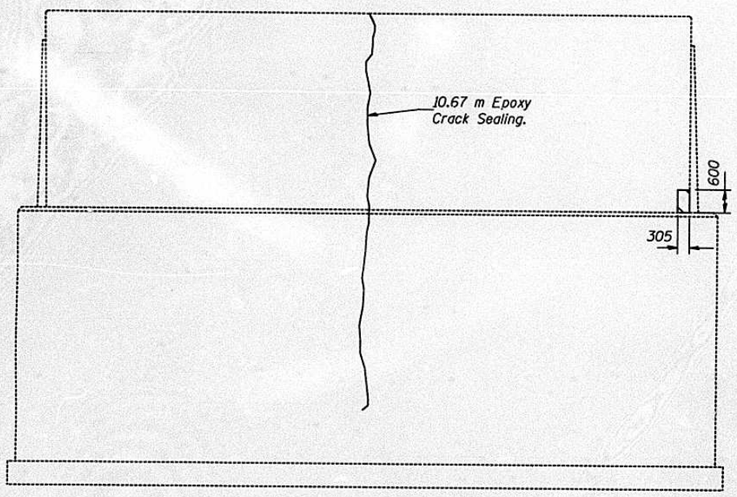

ELEVATION
(Looking East)

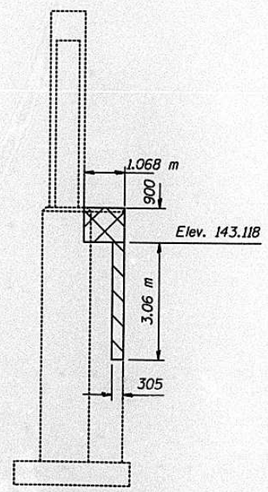

ELEVATION - SOUTH END

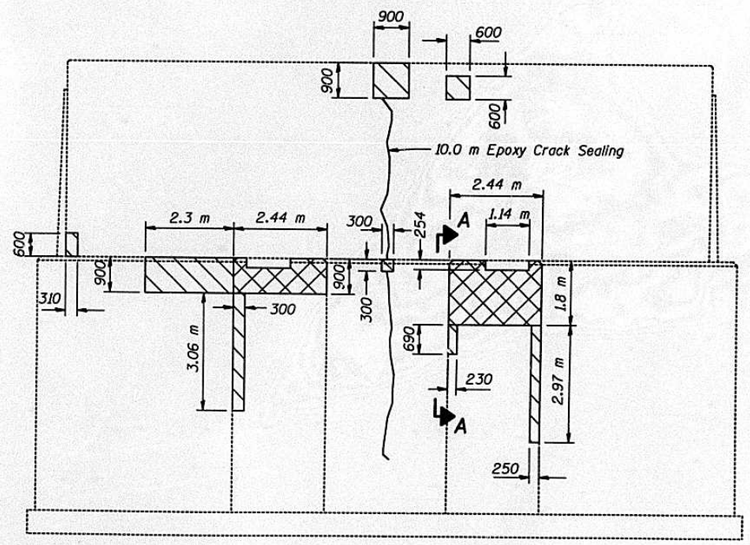

ELEVATION
(Looking West)

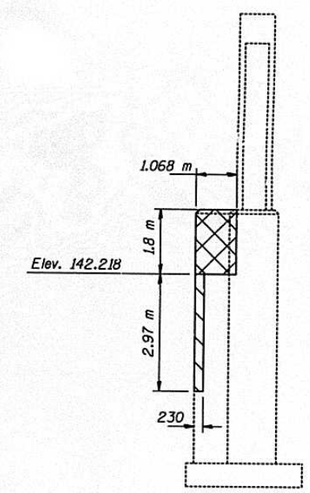

ELEVATION - NORTH END

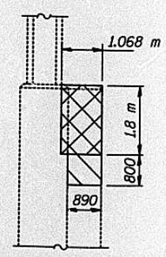

SECTION A - A

BILL OF MATERIAL - PIER 4

ITEM	UNIT	TOTAL
Concrete Removal	m^3	6.4
Formed Concrete Repair (Depth Equal To or Less Than 125 mm)	m^2	8
Epoxy Crack Sealing	m	20.7

DESIGNED	D. Verhulst
CHECKED	S. D. Gnann
DRAWN	KRG
CHECKED	DGV SDG

March 10, 1999
EXAMINED Raj. S. Kaspar
ENGINEER OF BRIDGE DESIGN
PASSED Ralph E. Anderson
ENGINEER OF BRIDGES AND STRUCTURES

CONCRETE REMOVAL & REPAIR
PIER 4
F.A. ROUTE 317 SECTION 15B-I-8
PEORIA & TAZEWELL COUNTIES
STATION 6 + 791.262

DWG. NO. F30

STATE OF ILLINOIS
DEPARTMENT OF TRANSPORTATION

ROUTE NO.	SECTION	COUNTY	TOTAL SHEETS	SHEET NO.
FA 317	15B-1-8	TAZEWELL	303	229
FED. ROAD DIST. NO. 7		ILLINOIS	FED. AID PROJECT-	

SHEET NO.
SHEETS

Note:
Existing reinforcement extending into new construction shall be cleaned, straightened and incorporated into new construction. Cost included with "Concrete Removal".

Note A:
2-152 mm ϕ x 840 mm pipe sleeves with 38 mm ϕ x 1.143 m anchor rods embedded in concrete under each existing bearing. Flame cut to removal line. If concrete in sleeve is deteriorated, remove and replace with a grout approved by the Department. Cost included with "Concrete Removal".

LEGEND

Concrete Removal

Formed Concrete Repair (Depth Equal To or Less Than 125 mm)

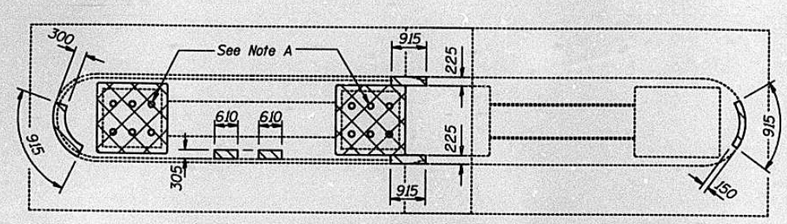

PLAN

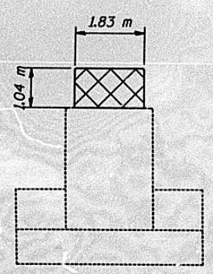

ELEVATION - NORTH END

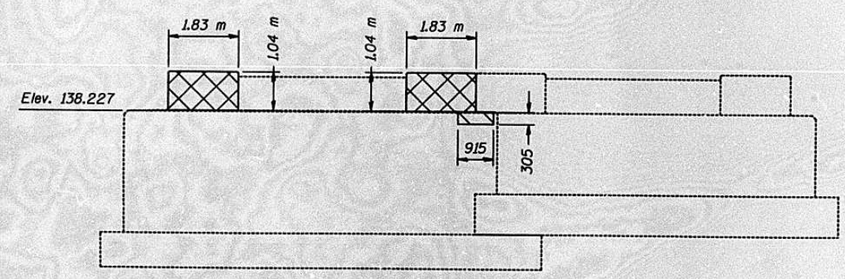

ELEVATION
(Looking East)

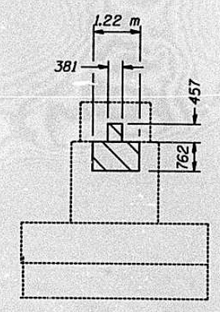

ELEVATION - SOUTH END

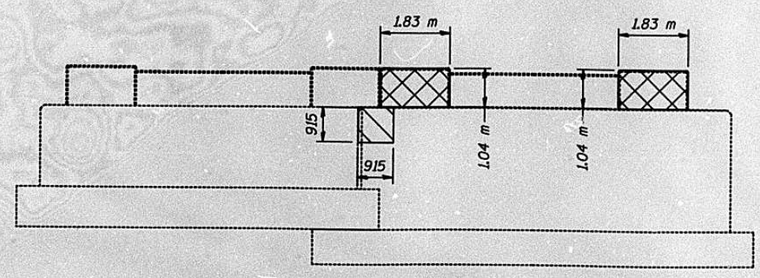

ELEVATION
(Looking West)

BILL OF MATERIAL - PIER 5

ITEM	UNIT	TOTAL
Concrete Removal	m^3	7.0
Formed Concrete Repair (Depth Equal To or Less Than 125 mm)	m^2	3

DESIGNED	D. Verhulst
CHECKED	S. D. Gnann
DRAWN	KRG
CHECKED	DGV SDG

March 10, 1999
EXAMINED Greg J. Kaspar
ENGINEER OF BRIDGE DESIGN
PASSED Ralph E. Anderson
ENGINEER OF BRIDGES AND STRUCTURES

CONCRETE REMOVAL & REPAIR
PIER 5
F.A. ROUTE 317 SECTION 15B-1-8
PEORIA & TAZEWELL COUNTIES
STATION 6 + 791.262

DWG. NO. F31

STATE OF ILLINOIS
DEPARTMENT OF TRANSPORTATION

ROUTE NO.	SECTION	COUNTY	TOTAL SHEETS	SHEET NO.
FA 317	158-1-8	TAZEWELL	303	230
FED. ROAD DIST. NO. 7	ILLINOIS	FED. AID PROJECT-		

SHEET NO.
SHEETS

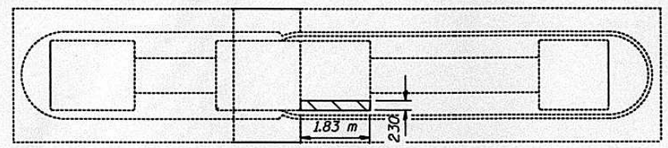

PLAN

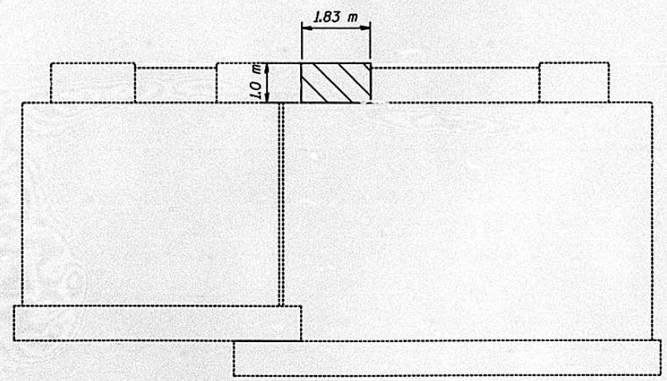

ELEVATION
(Looking West)

LEGEND

Formed Concrete Repair (Depth Equal To or Less Than 125 mm)

BILL OF MATERIAL - PIER 6

ITEM	UNIT	TOTAL
Formed Concrete Repair (Depth Equal To or Less Than 125 mm)	m^2	2

DESIGNED	D. Verhulst
CHECKED	S. D. Gnann
DRAWN	KRG
CHECKED	DGV SDG

March 10, 1999
EXAMINED Greg L. Kasper ENGINEER OF BRIDGE DESIGN
PASSED Ralph E. Anderson ENGINEER OF BRIDGES AND STRUCTURES

CONCRETE REMOVAL & REPAIR
PIER 6
F.A. ROUTE 317 SECTION 15B-1-8
PEORIA & TAZEWELL COUNTIES
STATION 6 + 791.262

DWG. NO. F32

STATE OF ILLINOIS
DEPARTMENT OF TRANSPORTATION

ROUTE NO.	SECTION	COUNTY	TOTAL SHEETS	SHEET NO.
FA 317	15B-1-8	TAZEWELL	303	271
FED. ROAD DIST. NO. 7	ILLINOIS	FED. AID PROJECT-		

SHEET NO.
SHEETS

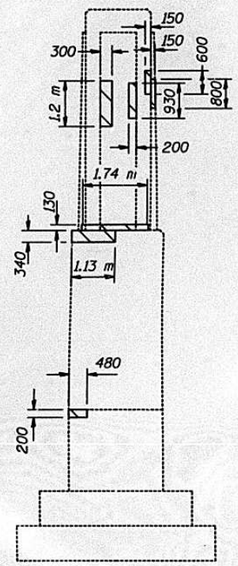

ELEVATION - NORTH END

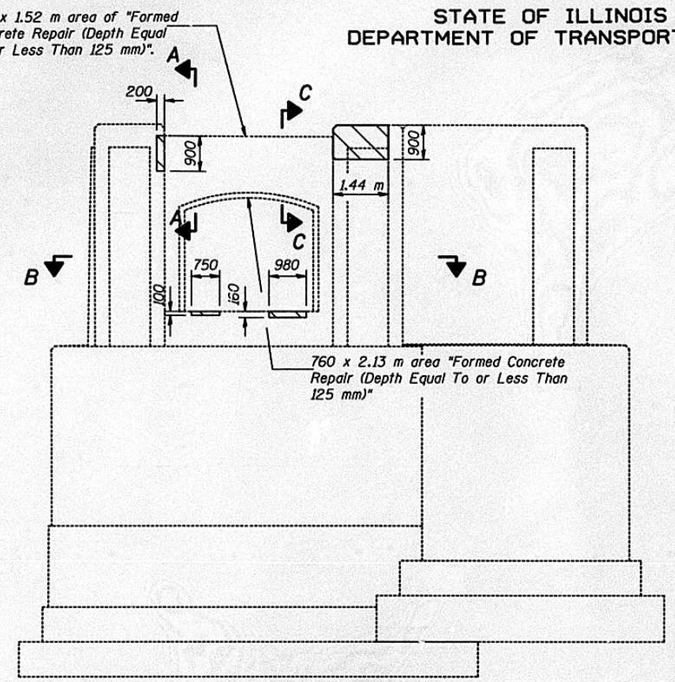

ELEVATION
(Looking East)

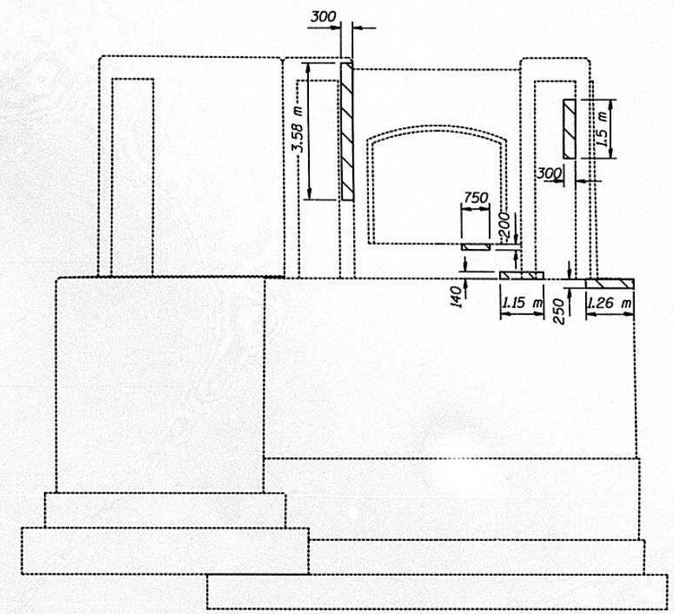

ELEVATION
(Looking West)

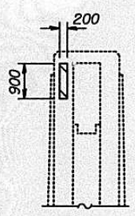

SECTION A - A

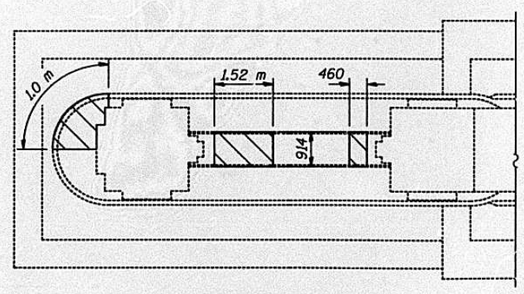

SECTION B - B

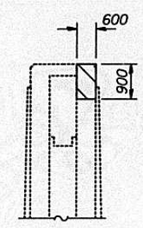

SECTION C - C

LEGEND

Formed Concrete Repair (Depth Equal To or Less Than 125 mm)

BILL OF MATERIAL - PIER 7

ITEM	UNIT	TOTAL
Formed Concrete Repair (Depth Equal To or Less Than 125 mm)	m^2	11

DESIGNED	D. Verhulst
CHECKED	S. D. Gnann
DRAWN	KRG
CHECKED	DGV SDG

March 10, 1999
EXAMINED Greg S. Kaspar ENGINEER OF BRIDGE DESIGN
PASSED Ralph E. Anderson ENGINEER OF BRIDGES AND STRUCTURES

CONCRETE REMOVAL & REPAIR
PIER 7
F.A. ROUTE 317 SECTION 15B-1-8
PEORIA & TAZEWELL COUNTIES
STATION 6 + 791.262

DWG. NO. F33

STATE OF ILLINOIS
DEPARTMENT OF TRANSPORTATION

ROUTE NO.	SECTION	COUNTY	TOTAL SHEETS	SHEET NO.
FA 317	158-1-8	TAZEWELL	303	232
FED. ROAD DIST. NO. 7	ILLINOIS	FED. AID PROJECT-		

SHEET NO.
SHEETS

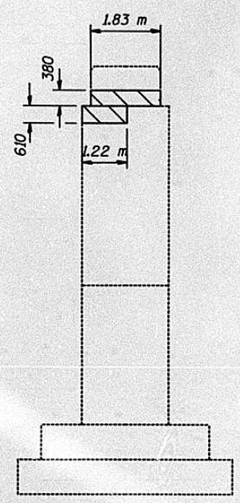

ELEVATION - NORTH END

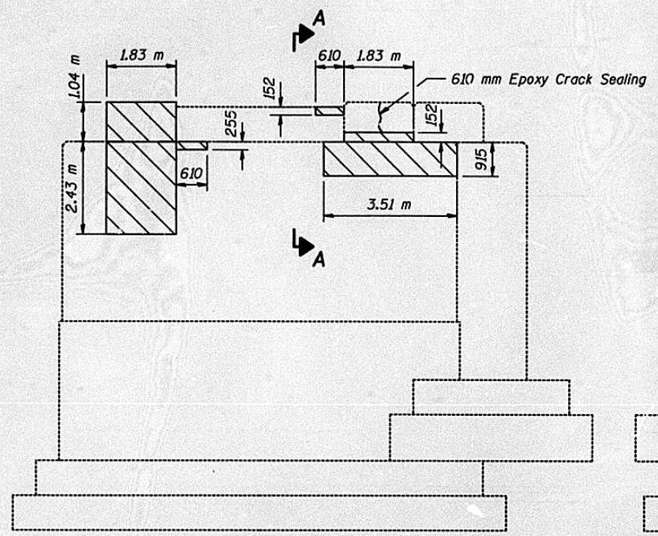

ELEVATION
(Looking East)

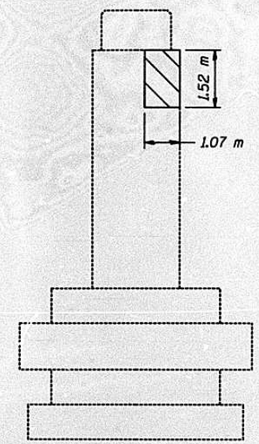

ELEVATION - SOUTH END

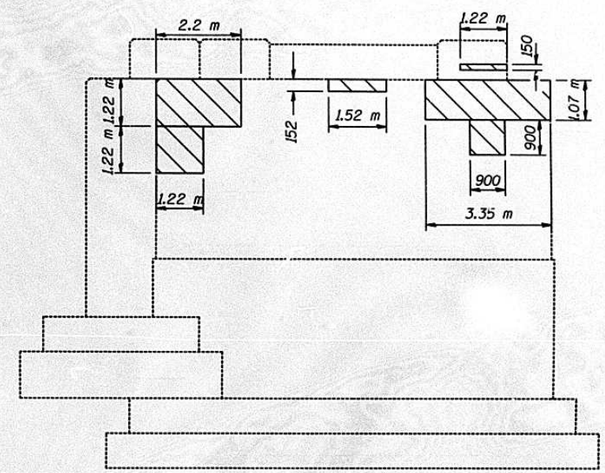

ELEVATION
(Looking West)

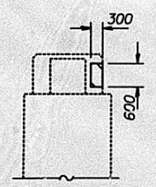

SECTION A - A

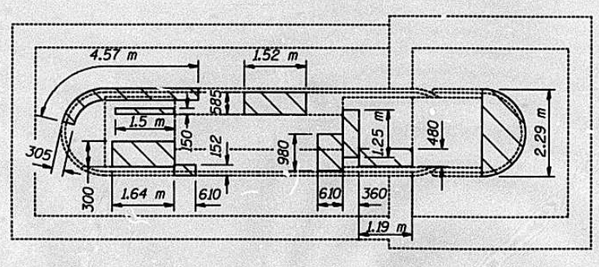

PLAN

LEGEND

Formed Concrete Repair (Depth Equal To or Less Than 125 mm)

BILL OF MATERIAL - PIER 9

ITEM	UNIT	TOTAL
Formed Concrete Repair (Depth Equal To or Less Than 125 mm)	m^2	29
Epoxy Crack Sealing	m	0.6

DESIGNED	D. Verhulst
CHECKED	S. D. Gnann
DRAWN	KRG
CHECKED	DGV SDG

March 10, 1999
EXAMINED Jerry L. Kaspar
ENGINEER OF BRIDGE DESIGN
PASSED Ralph E. Anderson
ENGINEER OF BRIDGES AND STRUCTURES

CONCRETE REMOVAL & REPAIR
PIER 9
F.A. ROUTE 317 SECTION 15B-I-8
PEORIA & TAZEWELL COUNTIES
STATION 6 + 791.262

DWG. NO. F34

D C B A 0 A B C D
TAMERAN

STATE OF ILLINOIS
DEPARTMENT OF TRANSPORTATION

ROUTE NO.	SECTION	COUNTY	TOTAL SHEETS	SHEET NO.
FA 317	15B-1-8	TAZEWELL	303	233
FED. ROAD DIST. NO. 7	ILLINOIS	FED. AID PROJECT-		

SHEET NO.
SHEETS

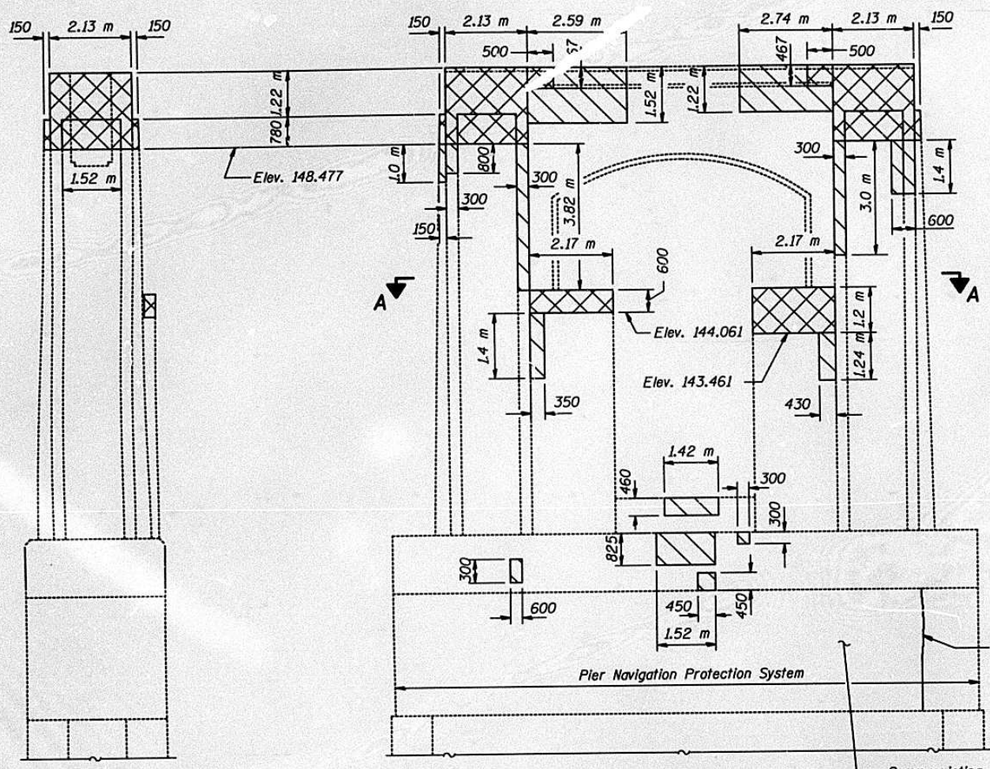

ELEVATION - NORTH END

ELEVATION
(Looking East)

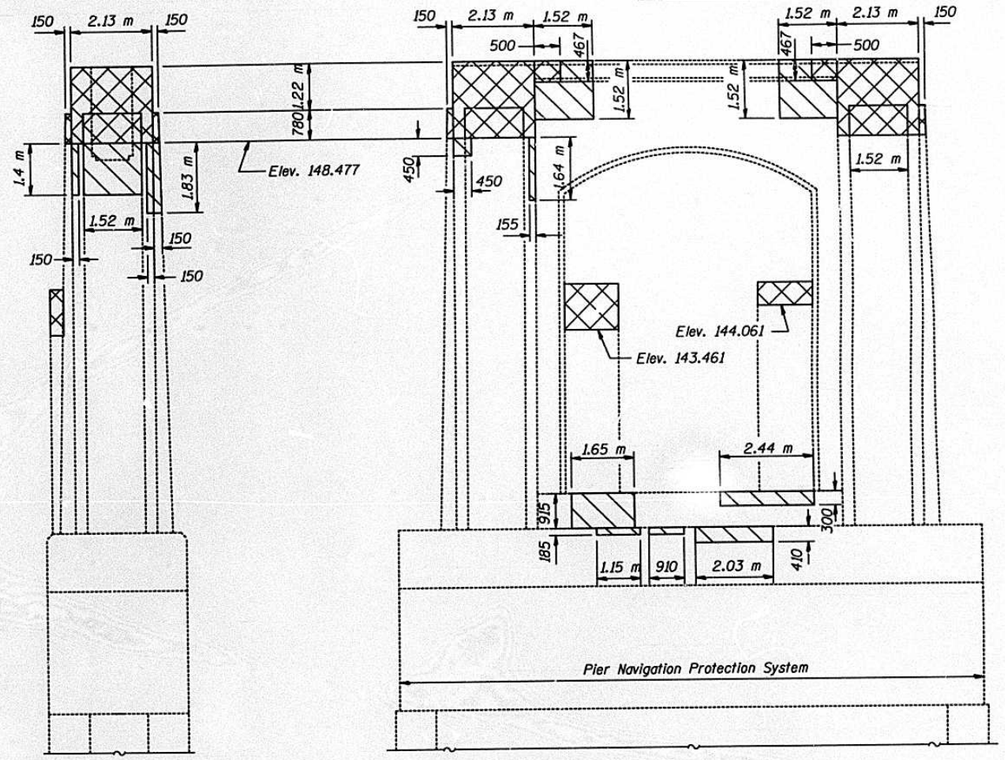

ELEVATION - SOUTH END

ELEVATION
(Looking West)

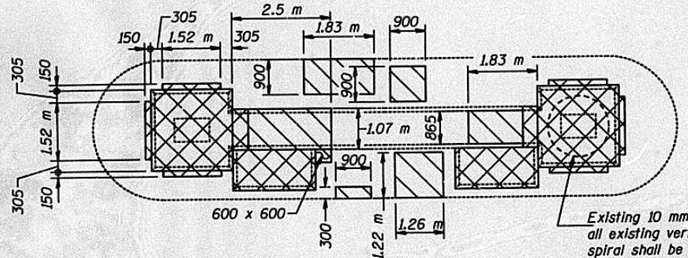

Existing 10 mm ϕ spiral bar and all existing vertical bars inside spiral shall be flame cut and removed at concrete removal line. Typical at both ends

PLAN

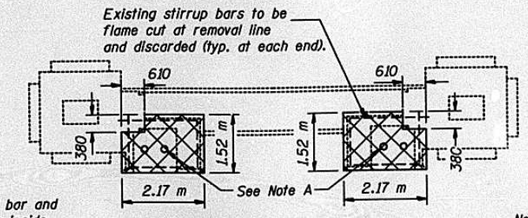

SECTION A - A

Note A:
2-152 mm ϕ x 762 mm pipe sleeves with 38 mm ϕ x 1.321 m anchor rods embedded in concrete under each existing bearing. Flame cut to removal line. If concrete in sleeve is deteriorated, remove and replace with a grout approved by the Department. Cost included with "Concrete Removal".

Note:
Existing reinforcement extending into new construction shall be cleaned, straightened and incorporated into new construction, except as noted. Cost included with "Concrete Removal".
The Contractor shall grind or chip all cracked welds parallel to the direction of the existing weld.
Field welding shall be used to repair the cracked weld to the original configuration. All labor and materials required to repair the cracked weld shall be included in the cost of "Formed Concrete Repair (Depth Equal To or Less Than 125 mm)".

BILL OF MATERIAL - PIER 10

ITEM	UNIT	TOTAL
Concrete Removal	m^3	25.2
Formed Concrete Repair (Depth Equal To or Less Than 125 mm)	m^2	32

LEGEND

Concrete Removal

Formed Concrete Repair (Depth Equal To or Less Than 125 mm)

DESIGNED	D. Verhulst
CHECKED	S. D. Gnann
DRAWN	KRG
CHECKED	DGV SDG

March 10, 1999
EXAMINED Greg S. Kasper ENGINEER OF BRIDGE DESIGN
PASSED Ralph E. Anderson ENGINEER OF BRIDGES AND STRUCTURES

CONCRETE REMOVAL & REPAIR
PIER 10
F.A. ROUTE 317 SECTION 15B-I-8
PEORIA & TAZEWELL COUNTIES
STATION 6 + 791.262

DWG. NO. F35

STATE OF ILLINOIS
DEPARTMENT OF TRANSPORTATION

ROUTE NO.	SECTION	COUNTY	TOTAL SHEETS	SHEET NO.
FA 317	15B-1-8	TAZEWELL	303	233
FED. ROAD DIST. NO. 7	ILLINOIS	FED. AID PROJECT-		

SHEET NO.
SHEETS

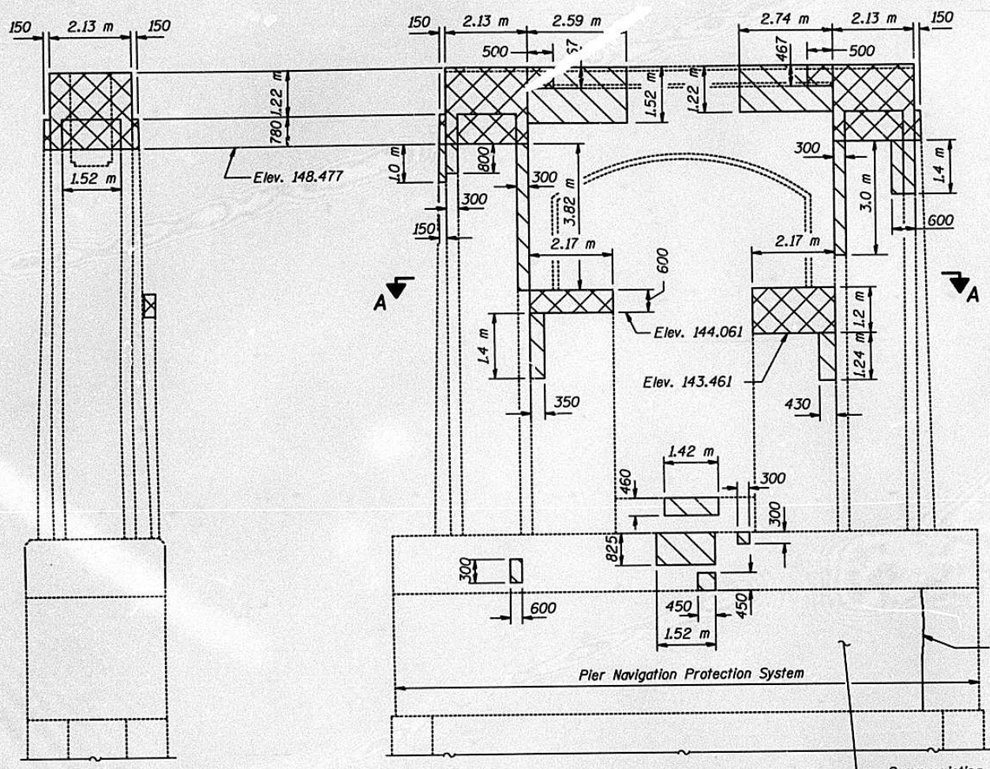

ELEVATION - NORTH END

ELEVATION
(Looking East)

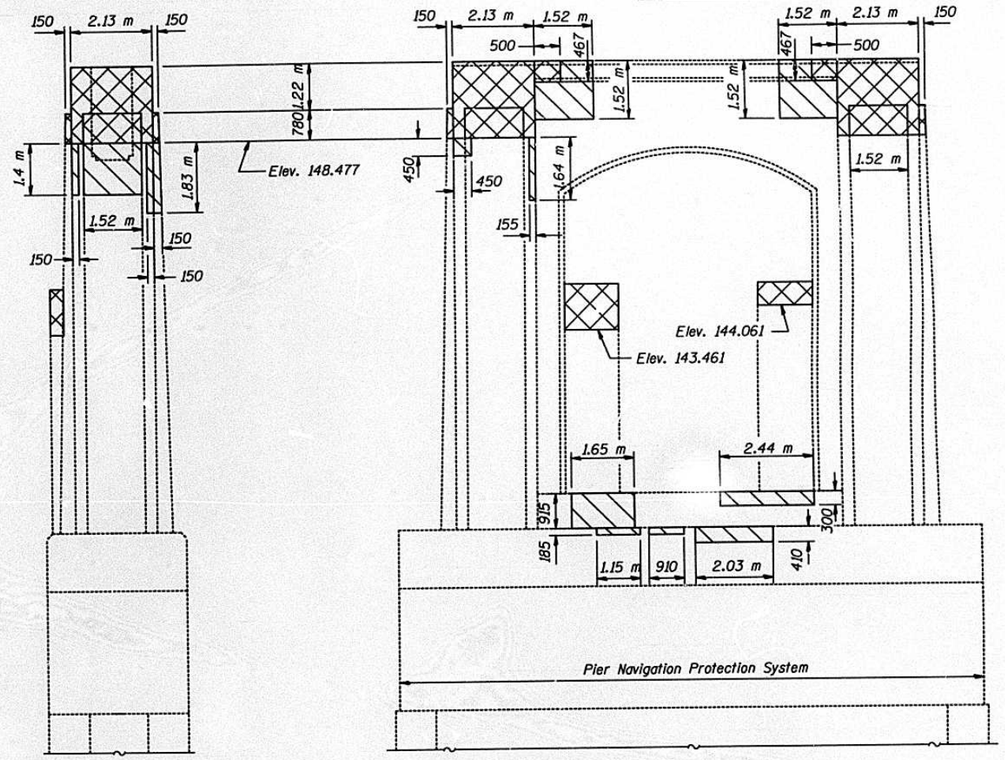

ELEVATION - SOUTH END

ELEVATION
(Looking West)

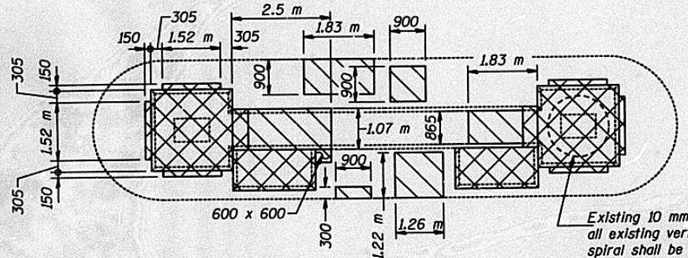

Existing 10 mm ϕ spiral bar and all existing vertical bars inside spiral shall be flame cut and removed at concrete removal line. Typical at both ends

PLAN

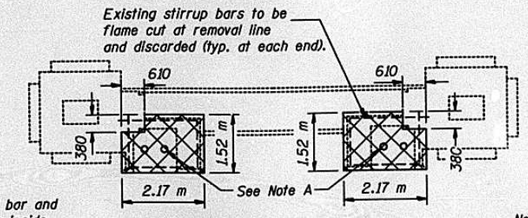

SECTION A - A

Note A:
2-152 mm ϕ x 762 mm pipe sleeves with 38 mm ϕ x 1.321 m anchor rods embedded in concrete under each existing bearing. Flame cut to removal line. If concrete in sleeve is deteriorated, remove and replace with a grout approved by the Department. Cost included with "Concrete Removal".

Note:
Existing reinforcement extending into new construction shall be cleaned, straightened and incorporated into new construction, except as noted. Cost included with "Concrete Removal".
The Contractor shall grind or chip all cracked welds parallel to the direction of the existing weld.
Field welding shall be used to repair the cracked weld to the original configuration. All labor and materials required to repair the cracked weld shall be included in the cost of "Formed Concrete Repair (Depth Equal To or Less Than 125 mm)".

BILL OF MATERIAL - PIER 10

ITEM	UNIT	TOTAL
Concrete Removal	m^3	25.2
Formed Concrete Repair (Depth Equal To or Less Than 125 mm)	m^2	32

LEGEND

Concrete Removal

Formed Concrete Repair (Depth Equal To or Less Than 125 mm)

DESIGNED	D. Verhulst
CHECKED	S. D. Gnann
DRAWN	KRG
CHECKED	DGV SDG

March 10, 1999
EXAMINED Greg S. Kasper ENGINEER OF BRIDGE DESIGN
PASSED Ralph E. Anderson ENGINEER OF BRIDGES AND STRUCTURES

CONCRETE REMOVAL & REPAIR
PIER 10
F.A. ROUTE 317 SECTION 15B-I-8
PEORIA & TAZEWELL COUNTIES
STATION 6 + 791.262

DWG. NO. F35

STATE OF ILLINOIS
DEPARTMENT OF TRANSPORTATION

ROUTE NO.	SECTION	COUNTY	TOTAL SHEETS	SHEET NO.
FA 317	15B-1-8	TAZEWELL	303	234
FED. ROAD DIST. NO. 7		ILLINOIS	FED. AID PROJECT-	

SHEET NO.
SHEETS

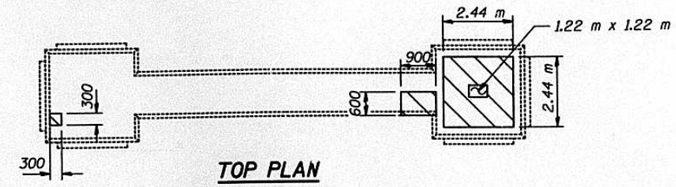

TOP PLAN

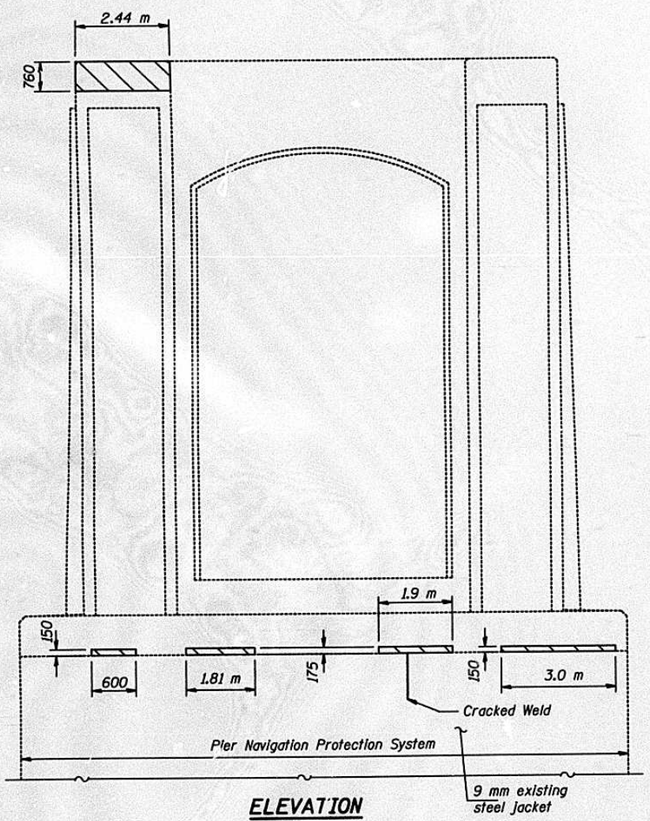

ELEVATION
(Looking West)

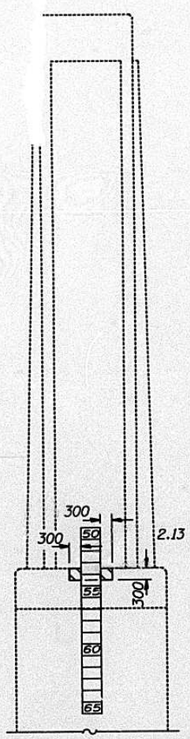

ELEVATION - NORTH END

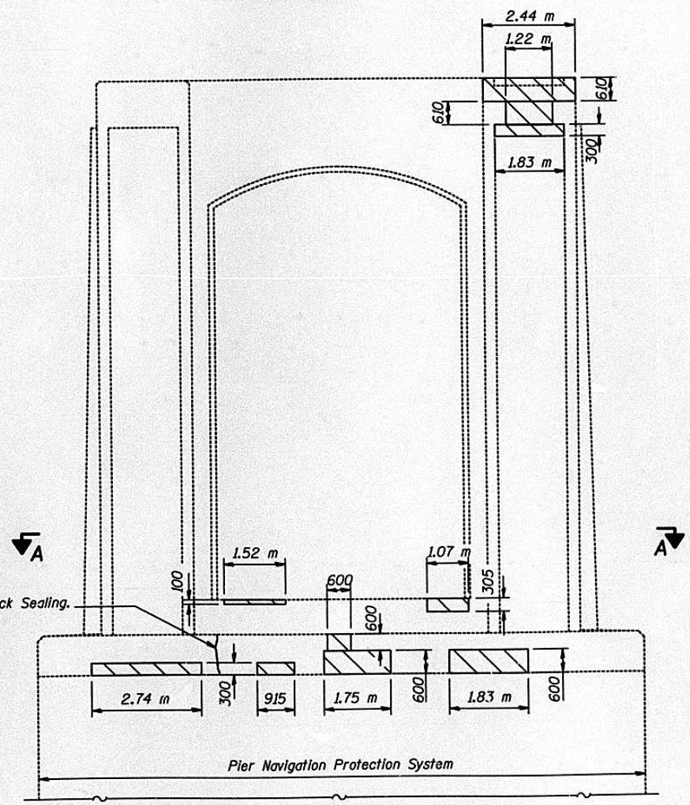

ELEVATION
(Looking East)

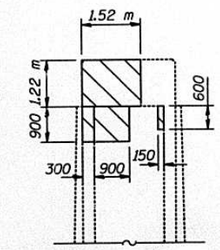

ELEVATION - SOUTH END

BILL OF MATERIAL - PIER 11

ITEM	UNIT	TOTAL
Epoxy Crack Sealing	m	3.3
Formed Concrete Repair (Depth Equal To or Less Than 125 mm)	m^2	25

LEGEND

Formed Concrete Repair (Depth Equal To or Less Than 125 mm)

Note:
The Contractor shall grind or chip all cracked welds parallel to the direction of the existing weld.
Field welding shall be used to repair the cracked weld to the original configuration. All labor and materials required to repair the cracked weld shall be included in the cost of "Formed Concrete Repair (Depth Equal To or Less Than 125 mm)".

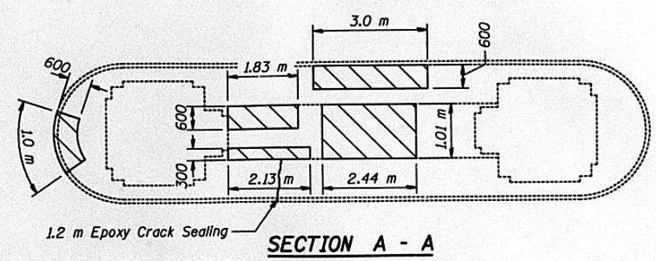

SECTION A - A

DESIGNED	D. Verhulst
CHECKED	S. D. Gnann
DRAWN	KRG
CHECKED	DGV SDG

March 10, 1999
EXAMINED Greg J. Kaspar
ENGINEER OF BRIDGE DESIGN
PASSED Ralph E. Anderson
ENGINEER OF BRIDGES AND STRUCTURES

CONCRETE REMOVAL & REPAIR
PIER 11
F.A. ROUTE 317 SECTION 15B-I-8
PEORIA & TAZEWELL COUNTIES
STATION 6 + 791.262

DWG. NO. F36

TAMERAN

STATE OF ILLINOIS
DEPARTMENT OF TRANSPORTATION

ROUTE NO.	SECTION	COUNTY	TOTAL SHEETS	SHEET NO.
FA 317	15B-1-8	TAZEWELL	303	235
FED. ROAD DIST. NO. 7		ILLINOIS	FED. AID PROJECT-	

SHEET NO.
SHEETS

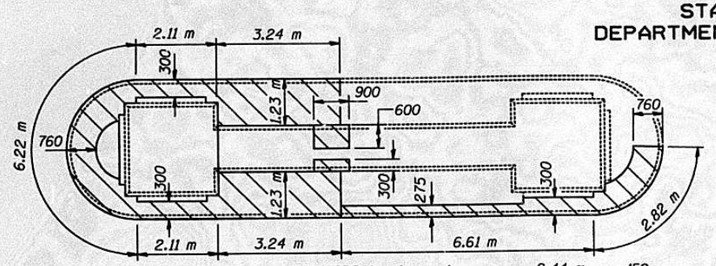

SECTION A - A

Existing 10 mm ϕ spiral bar and all existing vertical bars inside spiral shall be flame cut and removed at concrete removal line.

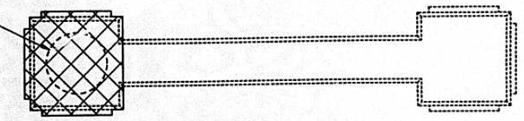

TOP PLAN

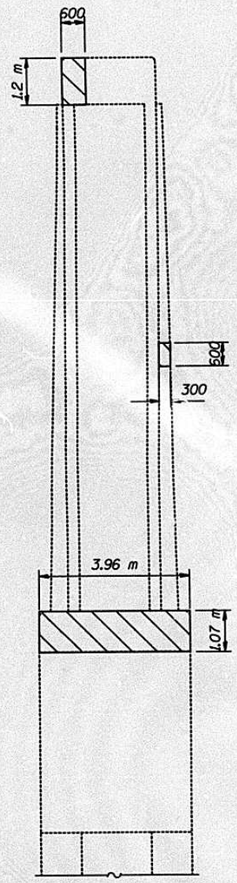

ELEVATION - NORTH END

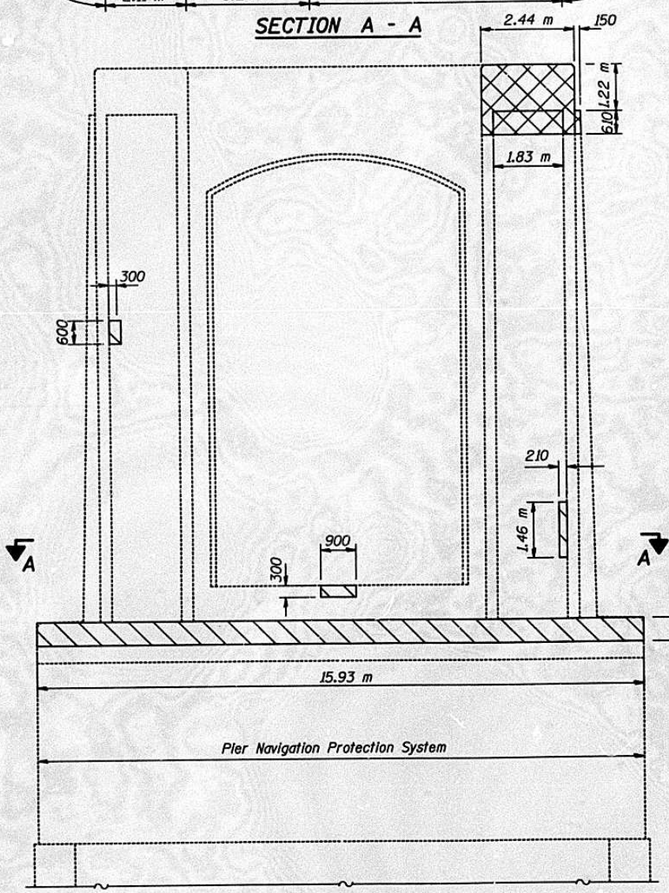

ELEVATION
(Looking East)

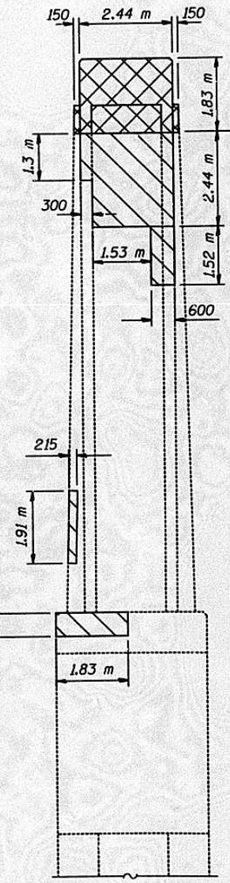

ELEVATION - SOUTH END

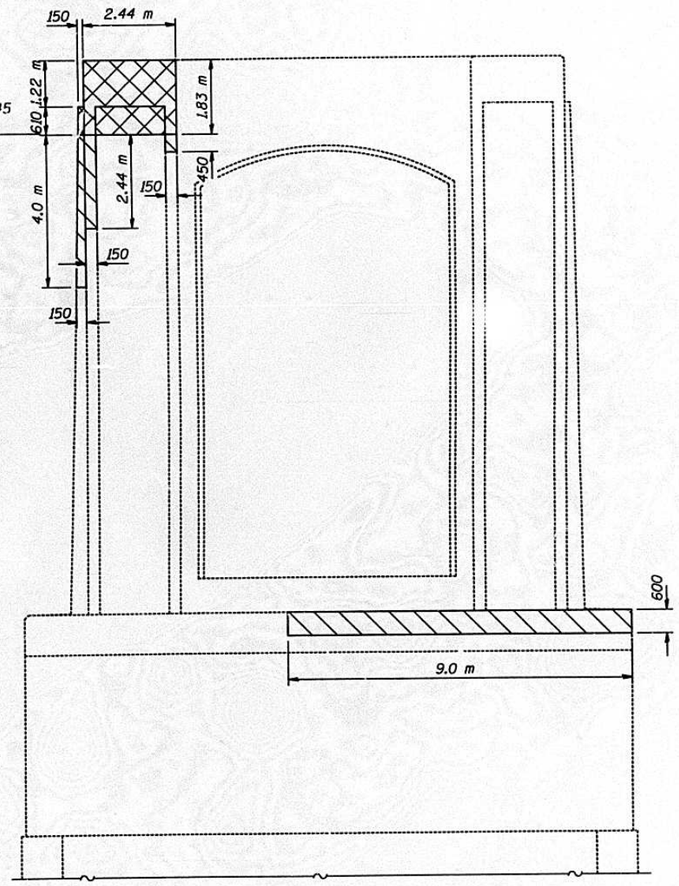

ELEVATION
(Looking West)

Note:
Existing reinforcement extending into new construction shall be cleaned, straightened and incorporated into new construction, except as noted. Cost included with "Concrete Removal".

LEGEND

- Concrete Removal
- Formed Concrete Repair (Depth Equal To or Less Than 125 mm)

BILL OF MATERIAL - PIER 12

ITEM	UNIT	TOTAL
Concrete Removal	m^3	11.4
Formed Concrete Repair (Depth Equal To or Less Than 125 mm)	m^2	48

DESIGNED	D. Verhulst
CHECKED	S. D. Gnann
DRAWN	KRG
CHECKED	DGV SDG

March 10, 1999
EXAMINED Greg J. Kasper — ENGINEER OF BRIDGE DESIGN
PASSED Ralph E. Anderson — ENGINEER OF BRIDGES AND STRUCTURES

CONCRETE REMOVAL & REPAIR
PIER 12
F.A. ROUTE 317 SECTION 15B-I-8
PEORIA & TAZEWELL COUNTIES
STATION 6 + 791.262

DWG. NO. F37

D C B A 0 A B C D
TAMERAN

ROUTE NO.	SECTION	COUNTY	TOTAL SHEETS	SHEET NO.
FA 317	15B-1-8	TAZEWELL	303	236
FED. ROAD DIST. NO. 7	ILLINOIS	FED. AID PROJECT-		

SHEET NO.
SHEETS

STATE OF ILLINOIS
DEPARTMENT OF TRANSPORTATION

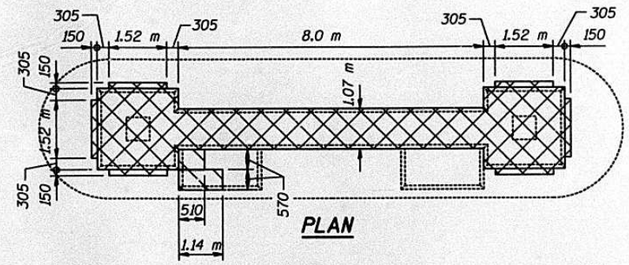

PLAN

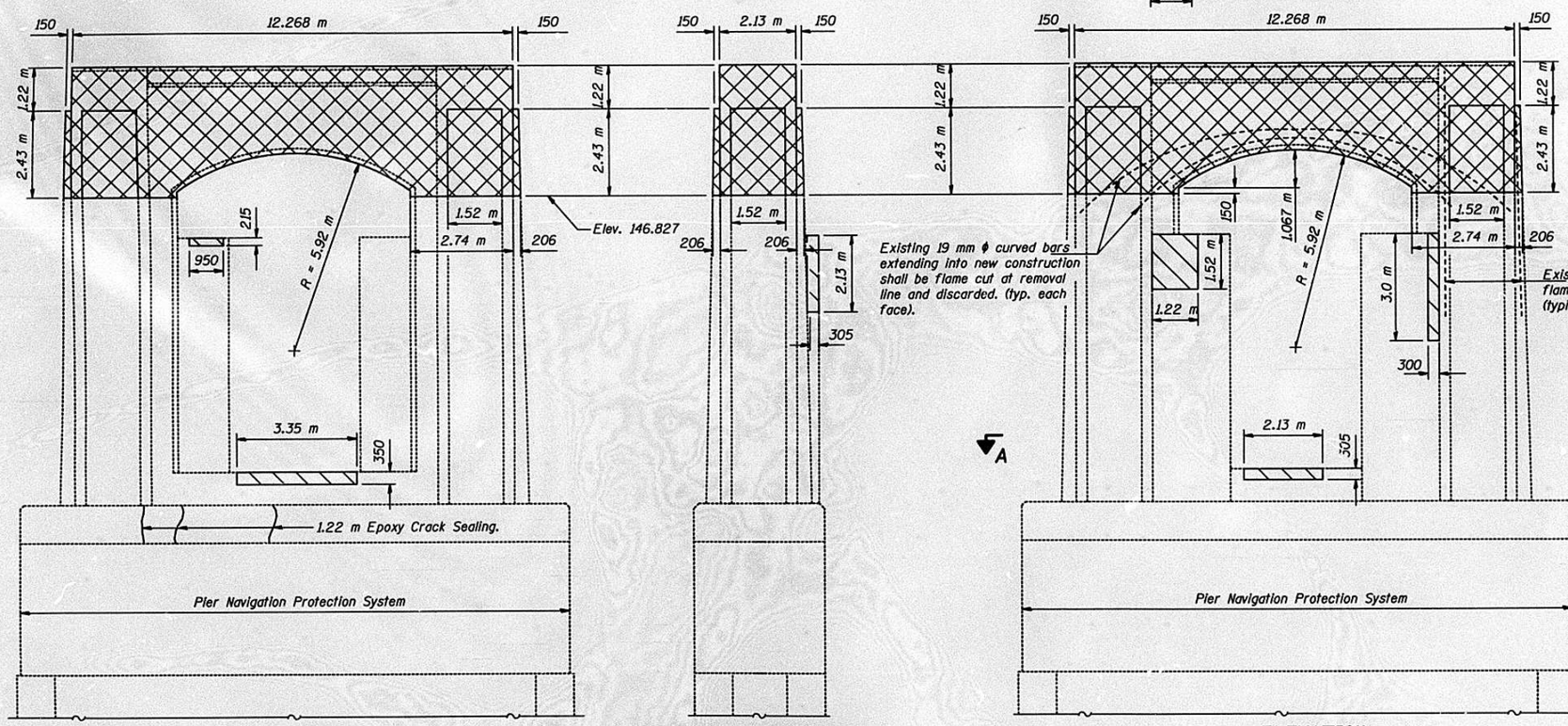

ELEVATION
(Looking East)

ELEVATION - SOUTH END

ELEVATION
(Looking West)

Note:
Existing reinforcement extending into new construction shall be cleaned, straightened and incorporated into new construction, except as noted. Cost included with "Concrete Removal".

LEGEND

Concrete Removal

Formed Concrete Repair (Depth Equal To or Less Than 125 mm)

BILL OF MATERIAL - PIER 13

ITEM	UNIT	TOTAL
Concrete Removal	m^3	62.0
Formed Concrete Repair (Depth Equal To or Less Than 125 mm)	m^2	7
Epoxy Crack Sealing	m	3.7

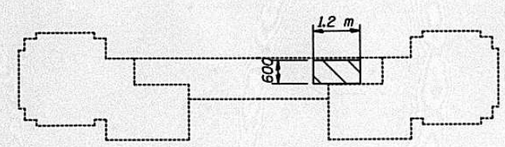

SECTION A - A

DESIGNED	D. Verhulst
CHECKED	S. D. Gnann
DRAWN	KRG
CHECKED	DGV SDG

March 10, 1999
EXAMINED Craig J. Kaspar
ENGINEER OF BRIDGE DESIGN
PASSED Ralph E. Anderson
ENGINEER OF BRIDGES AND STRUCTURES

CONCRETE REMOVAL & REPAIR
PIER 13
F.A. ROUTE 317 SECTION 15B-I-8
PEORIA & TAZEWELL COUNTIES
STATION 6 + 791.262

DWG. NO. F38

STATE OF ILLINOIS
DEPARTMENT OF TRANSPORTATION

ROUTE NO.	SECTION	COUNTY	TOTAL SHEETS	SHEET NO.
FA 317	15B-1-8	TAZEWELL	303	287
FED. ROAD DIST. NO. 7		ILLINOIS	FED. AID PROJECT-	

SHEET NO.
SHEETS

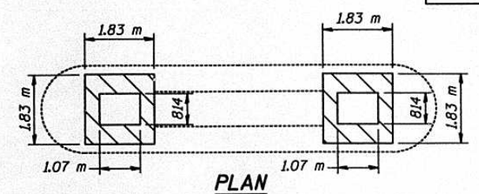

PLAN

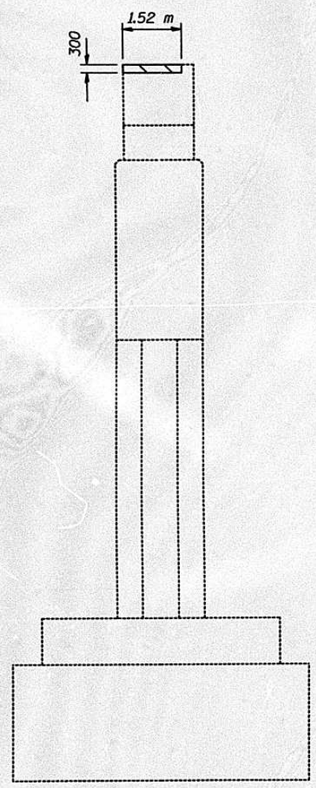

ELEVATION - NORTH END

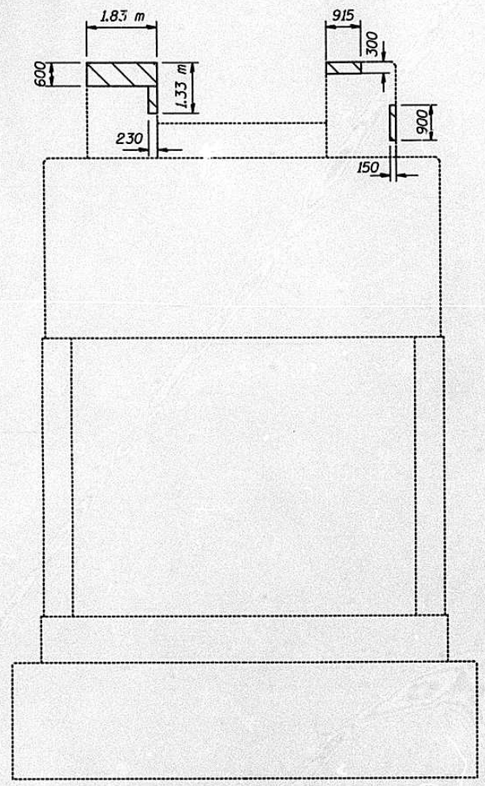

ELEVATION
(Looking East)

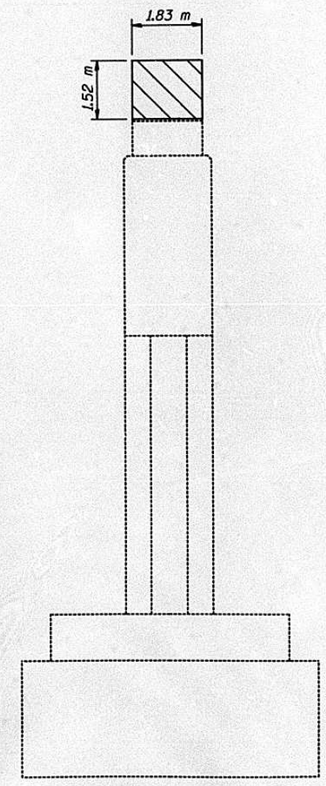

ELEVATION - SOUTH END

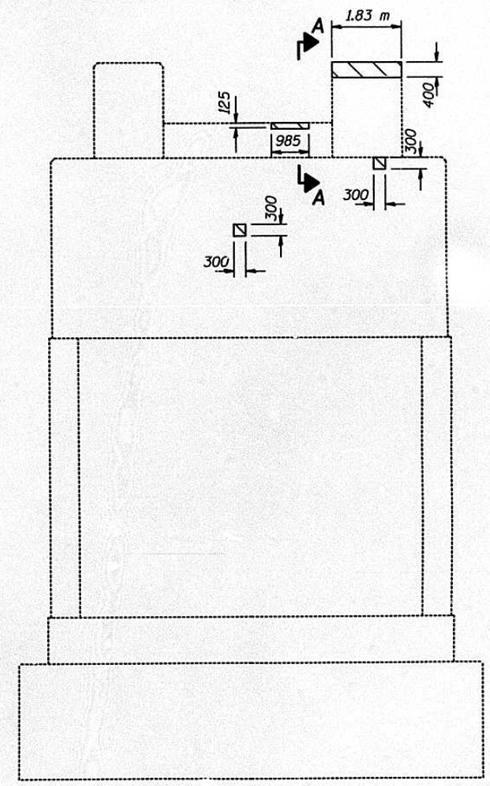

ELEVATION
(Looking West)

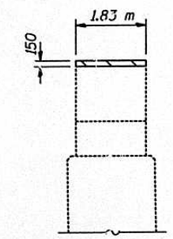

SECTION A - A

LEGEND

Formed Concrete Repair (Depth Equal To or Less Than 125 mm)

BILL OF MATERIAL - PIER 14

ITEM	UNIT	TOTAL
Formed Concrete Repair (Depth Equal To or Less Than 125 mm)	m^2	11

DESIGNED	D. Verhulst
CHECKED	S. D. Gnann
DRAWN	KRG
CHECKED	DGV SDG

March 10, 1999
EXAMINED Craig D. Kasper ENGINEER OF BRIDGE DESIGN
PASSED Ralph E. Anderson ENGINEER OF BRIDGES AND STRUCTURES

CONCRETE REMOVAL & REPAIR
PIER 14
F.A. ROUTE 317 SECTION 15B-I-8
PEORIA & TAZEWELL COUNTIES
STATION 6 + 791.262

DWG. NO. F39

D C B A 0 A B C

ROUTE NO.	SECTION	COUNTY	TOTAL SHEETS	SHEET NO.	SHEET NO.
FA 317	15B-1-8	TAZEWELL	303	238	SHEETS
FED. ROAD DIST. NO. 7	ILLINOIS	FED. AID PROJECT-			

STATE OF ILLINOIS
DEPARTMENT OF TRANSPORTATION

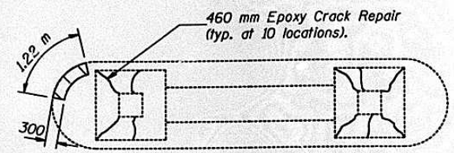

PLAN

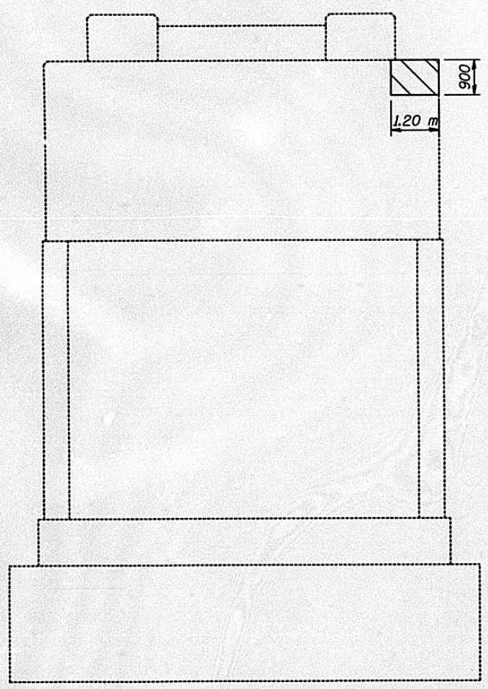

ELEVATION
(Looking East)

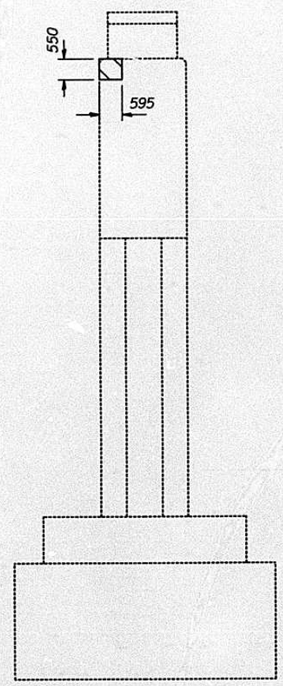

ELEVATION - SOUTH END

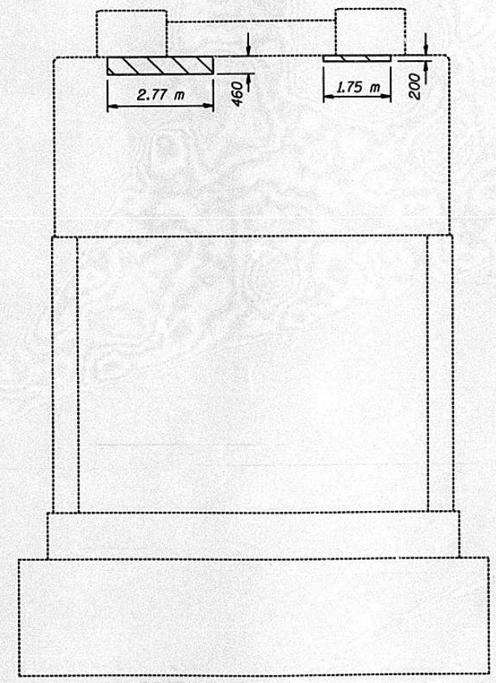

ELEVATION
(Looking West)

BILL OF MATERIAL - PIER 15

ITEM	UNIT	TOTAL
Epoxy Crack Sealing	m	4.6
Formed Concrete Repair (Depth Equal To or Less Than 125 mm)	m^2	3

LEGEND

Formed Concrete Repair (Depth Equal To or Less Than 125 mm)

DESIGNED	D. Verhulst
CHECKED	S. D. Gnann
DRAWN	KRG
CHECKED	DGV SDG

March 10, 1999

EXAMINED Greg J. Harper
ENGINEER OF BRIDGE DESIGN

PASSED Ralph E. Anderson
ENGINEER OF BRIDGES AND STRUCTURES

CONCRETE REMOVAL & REPAIR
PIER 15
F.A. ROUTE 317 SECTION 15B-I-8
PEORIA & TAZEWELL COUNTIES
STATION 6 + 791.262

DWG. NO. F40

STATE OF ILLINOIS
DEPARTMENT OF TRANSPORTATION

ROUTE NO.	SECTION	COUNTY	TOTAL SHEETS	SHEET NO.
FA 317	15B-1-8	TAZEWELL	303	239
FED. ROAD DIST. NO. 7	ILLINOIS	FED. AID PROJECT-		

SHEET NO.
SHEETS

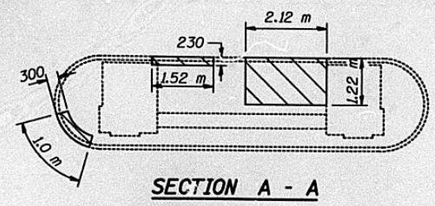

SECTION A - A

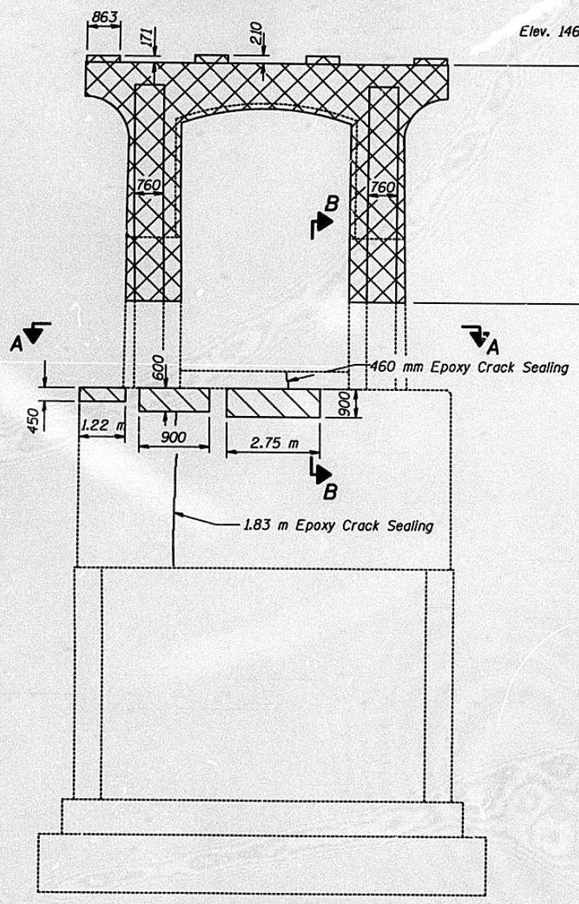

ELEVATION
(Looking West)

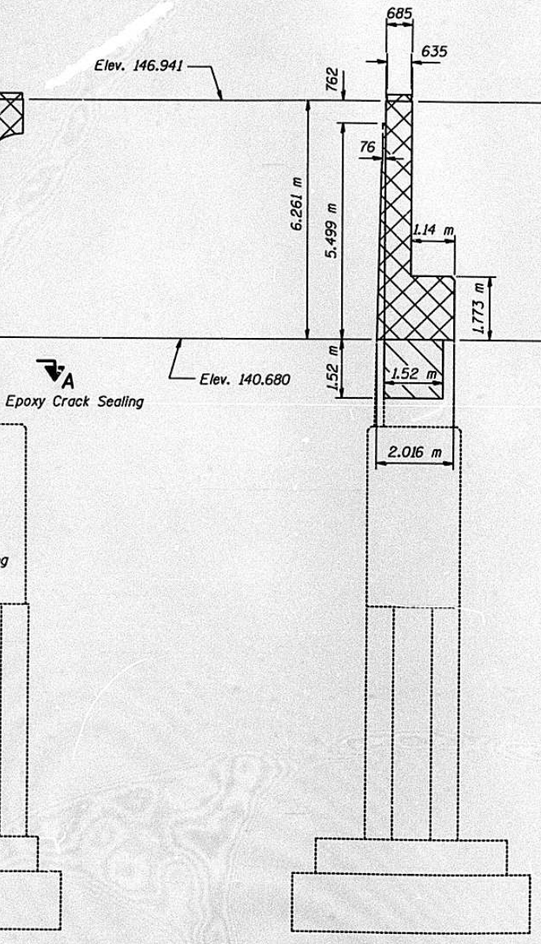

ELEVATION - NORTH END

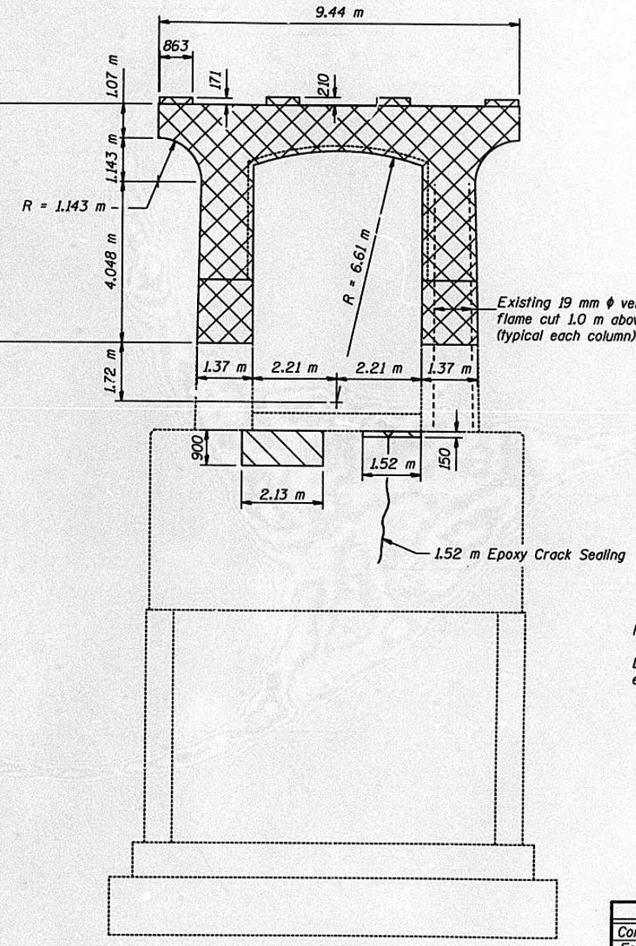

ELEVATION
(Looking East)

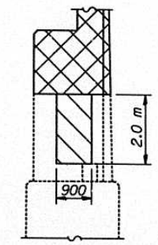

SECTION B - B

Note:
Existing reinforcement extending into new construction shall be cleaned, straightened and incorporated into new construction, except as noted. Cost included with "Concrete Removal".

LEGEND

Concrete Removal

Formed Concrete Repair (Depth Equal To or Less Than 125 mm)

BILL OF MATERIAL - PIER 16

ITEM	UNIT	TOTAL
Concrete Removal	m^3	25.4
Formed Concrete Repair (Depth Equal To or Less Than 125 mm)	m^2	13
Epoxy Crack Sealing	m	3.8

DESIGNED	D. Verhulst
CHECKED	S. D. Gnann
DRAWN	KRG
CHECKED	DGV SDG

March 10, 1999
EXAMINED Raj. S. Kaspar
ENGINEER OF BRIDGE DESIGN
PASSED Ralph E. Anderson
ENGINEER OF BRIDGES AND STRUCTURES

CONCRETE REMOVAL & REPAIR
PIER 16
F.A. ROUTE 317 SECTION 15B-I-8
PEORIA & TAZEWELL COUNTIES
STATION 6 + 791.262

DWG. NO. F41

C C B B A A 0 A A B B C C D
TAMERAN

Note "A": 2-76 mm ϕ x 381 mm Metal Sleeves (and covers) made of 20 gage galvanized steel are embedded in concrete under each existing bearing. Flame cut to removal line. If concrete in sleeve is deteriorated, remove and replace with a grout approved by the the Department. Cost included with "Concrete Removal".

STATE OF ILLINOIS
DEPARTMENT OF TRANSPORTATION

ROUTE NO.	SECTION	COUNTY	TOTAL SHEETS	SHEET NO.
F.A. 317	15B-1-8	PEORIA & TAZEWELL	303	240
FED. ROAD DIST. NO. 7	ILLINOIS	FED. AID PROJECT-		

SHEET NO.
SHEETS

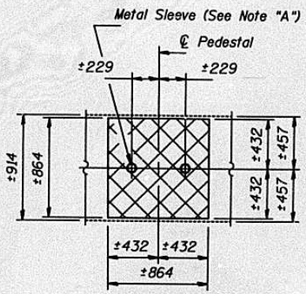

SECTION A-A

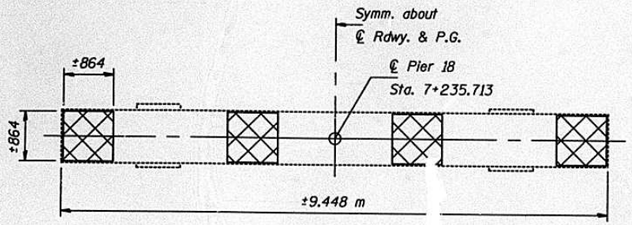

PLAN

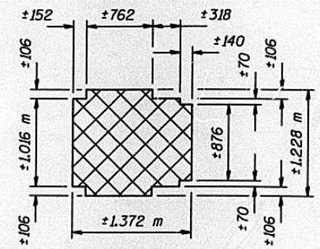

SECTION C-C

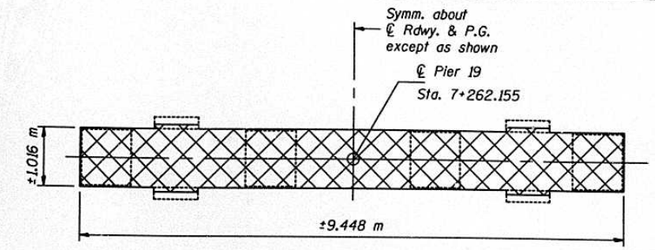

PLAN

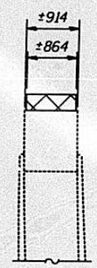

ELEVATION - SOUTH END

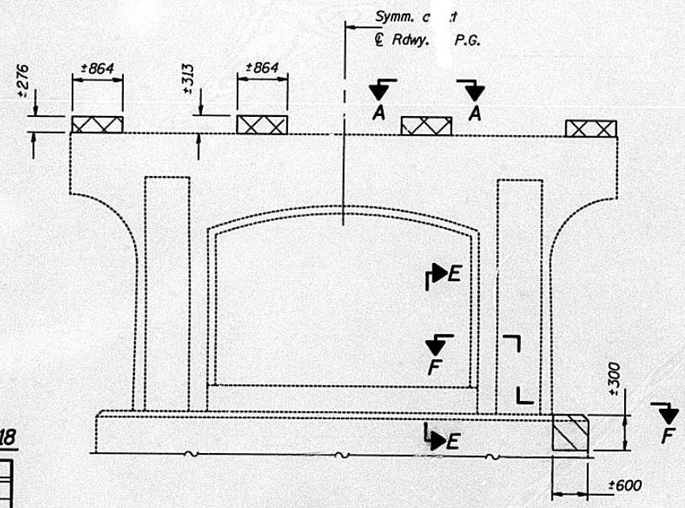

ELEVATION - PIER 18
(Looking West)

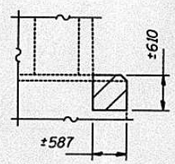

SECTION D-D

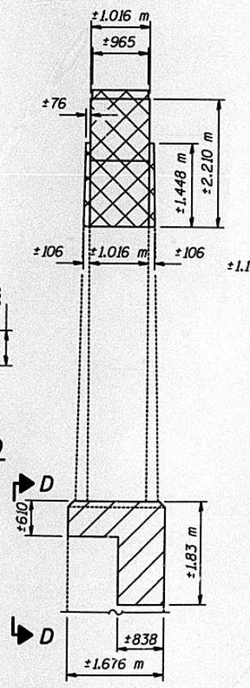

ELEVATION - SOUTH END

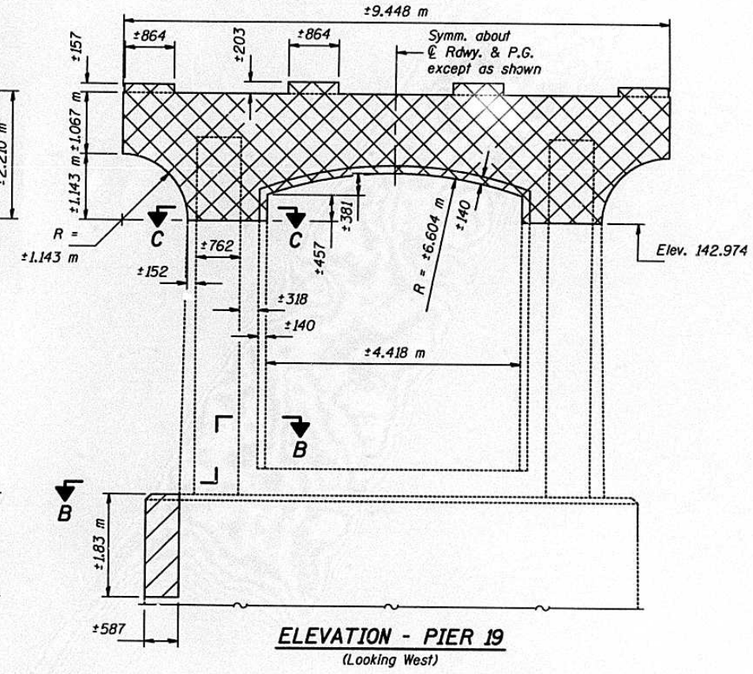

ELEVATION - PIER 19
(Looking West)

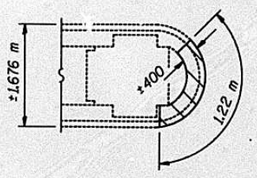

SECTION F-F

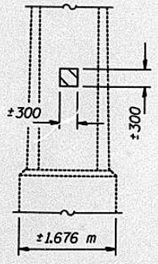

SECTION E-E

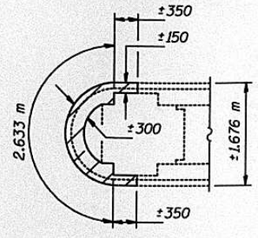

SECTION B-B

BILL OF MATERIAL - PIER 18

Item	Unit	Total
Concrete Removal	m^3	0.9
Formed Concrete Repair (Depth Equal To or Less Than 125 mm)	m^2	1

BILL OF MATERIAL - PIER 19

Item	Unit	Total
Concrete Removal	m^3	16.8
Formed Concrete Repair (Depth Greater Than 125 mm)	m^2	4

Concrete Removal

Formed Concrete Repair (Depth Greater Than 125 mm)

Formed Concrete Repair (Depth Equal To or Less Than 125 mm)

DESIGNED	S. Moynihan
CHECKED	D. Verhulst
DRAWN	John F. Schneller Jr.
CHECKED	S.E.M. D.G.V.

March 10, 1999

EXAMINED Greg J. Haspar
ENGINEER OF BRIDGE DESIGN

PASSED Ralph E. Anderson
ENGINEER OF BRIDGES AND STRUCTURES

Notes: Existing reinforcement extending into new construction shall be cleaned, straightened and incorporated into new construction. Cost included with "Concrete Removal".

CONCRETE REMOVAL & REPAIR
PIERS 18 & 19
F.A. ROUTE 317 SECTION 15B-1-8
PEORIA AND TAZEWELL COUNTIES
STATION 6+791.262

DWG. NO. F42

STATE OF ILLINOIS
DEPARTMENT OF TRANSPORTATION

ROUTE NO.	SECTION	COUNTY	TOTAL SHEETS	SHEET NO.
F.A. 317	15B-1-8	PEORIA & TAZEWELL	303	241
FED. ROAD DIST. NO. 7		ILLINOIS	FED. AID PROJECT-	

SHEET NO.
SHEETS

Note "A": 2-76 mm ϕ x 381 mm Metal Sleeves (and covers) made of 20 gage galvanized steel are embedded in concrete under each existing bearing. Flame cut to removal line. If concrete in sleeve is deteriorated, remove and replace with a grout approved by the Department. Cost included with "Concrete Removal".

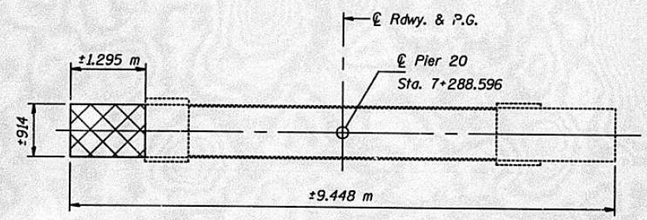

PLAN

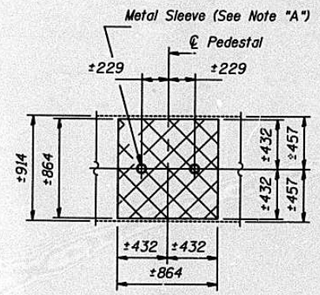

SECTION A-A

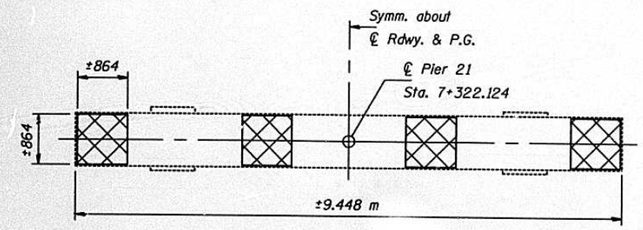

PLAN

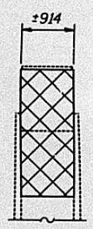

ELEVATION - SOUTH END

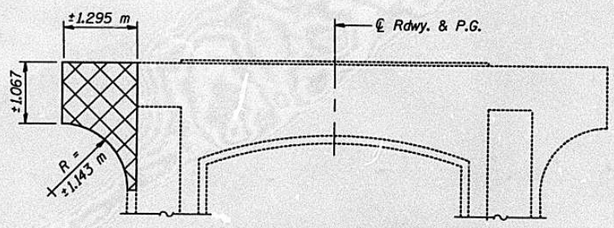

ELEVATION - PIER 20
(Looking West)

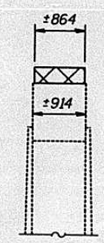

ELEVATION - SOUTH END

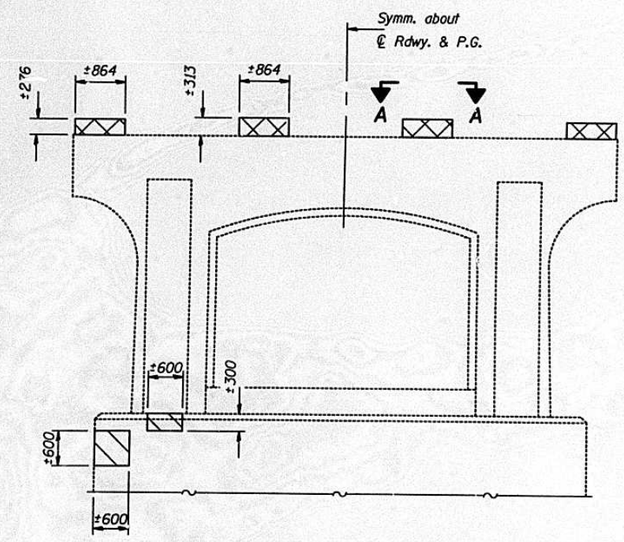

ELEVATION - PIER 21
(Looking East)

BILL OF MATERIAL - PIER 20

Item	Unit	Total
Concrete Removal	m³	1.7

BILL OF MATERIAL - PIER 21

Item	Unit	Total
Concrete Removal	m³	0.9
Formed Concrete Repair (Depth Equal To or Less Than 125 mm)	m²	1

Notes: Existing reinforcement extending into new construction shall be cleaned, straightened and incorporated into new construction. Cost included with "Concrete Removal".

Concrete Removal

Formed Concrete Repair (Depth Equal To or Less Than 125 mm)

DESIGNED	S. Moynihan
CHECKED	D. Verhulst
DRAWN	John F. Schneller Jr.
CHECKED	S.E.M. D.G.V.

March 10, 1999
EXAMINED Raj J. Kaspar ENGINEER OF BRIDGE DESIGN
PASSED Ralph E. Anderson ENGINEER OF BRIDGES AND STRUCTURES

CONCRETE REMOVAL & REPAIR
PIERS 20 & 21
F.A. ROUTE 317 SECTION 15B-1-8
PEORIA AND TAZEWELL COUNTIES
STATION 6+791.262

DWG. NO. F43

ROUTE NO.	SECTION	COUNTY	TOTAL SHEETS	SHEET NO.
F.A. 317	15B-I-8	PEORIA & TAZEWELL	303	242
FED. ROAD DIST. NO. 7	ILLINOIS	FED. AID PROJECT-		

SHEET NO.
SHEETS

STATE OF ILLINOIS
DEPARTMENT OF TRANSPORTATION

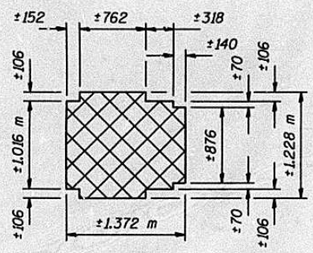

SECTION A-A

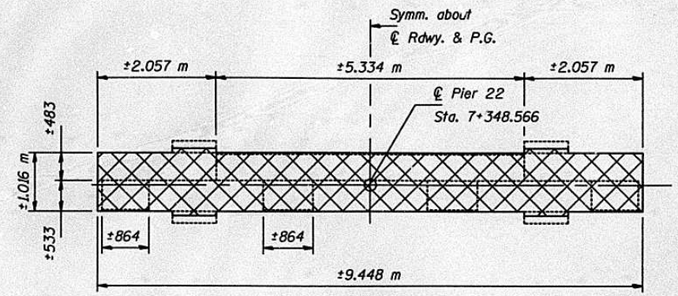

PLAN

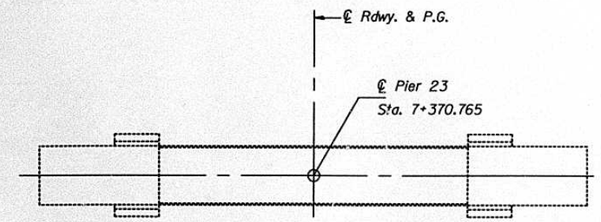

PLAN

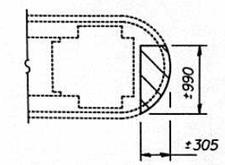

SECTION D-D

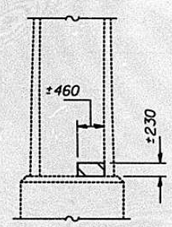

ELEVATION SOUTH END

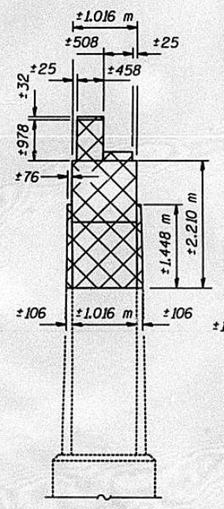

ELEVATION NORTH END

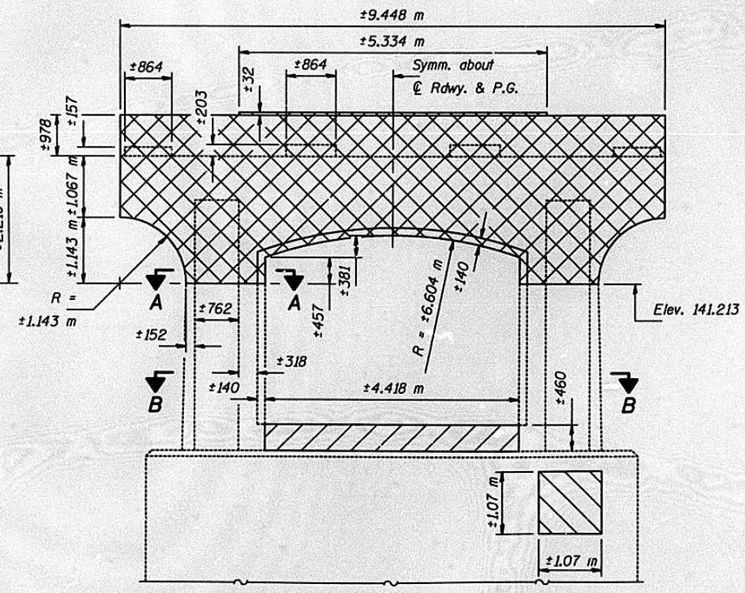

ELEVATION - PIER 22
(Looking East)

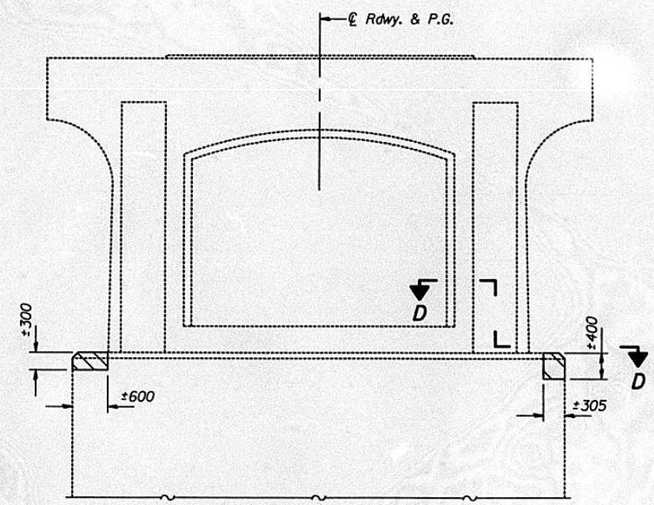

ELEVATION - PIER 23
(Looking West)

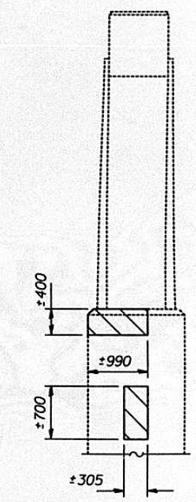

ELEVATION - NORTH END

BILL OF MATERIAL - PIER 22

Item	Unit	Total
Concrete Removal	m³	21.0
Formed Concrete Repair (Depth Greater Than 125 mm)	m²	8
Formed Concrete Repair (Depth Equal To or Less Than 125 mm)	m²	1

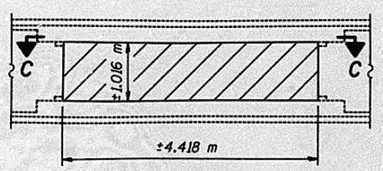

SECTION B-B

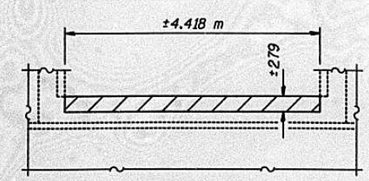

SECTION C-C

Concrete Removal

Formed Concrete Repair (Depth Greater Than 125 mm)

Formed Concrete Repair (Depth Equal To or Less Than 125 mm)

BILL OF MATERIAL - PIER 23

Item	Unit	Total
Formed Concrete Repair (Depth Equal To or Less Than 125 mm)	m²	1

DESIGNED	S. Moynihan
CHECKED	D. Verhulst
DRAWN	John F. Schneller Jr.
CHECKED	S.E.M. D.G.V.

March 10, 1999

EXAMINED Roy J. Kaspar — ENGINEER OF BRIDGE DESIGN

PASSED Ralph E. Anderson — ENGINEER OF BRIDGES AND STRUCTURES

Notes: Existing reinforcement extending into new construction shall be cleaned, straightened and incorporated into new construction. Cost included with "Concrete Removal".

CONCRETE REMOVAL & REPAIR
PIERS 22 & 23
F.A. ROUTE 317 SECTION 15B-I-8
PEORIA AND TAZEWELL COUNTIES
STATION 6+791.262

DWG. NO. F44

TAMERAN

Note "A": 2-76 mm ϕ x 381 mm Metal Sleeves (and covers) made of 20 gage galvanized steel are embedded in concrete under each existing bearing. Flame cut to removal line. If concrete in sleeve is deteriorated, remove and replace with a grout approved by the Department. Cost included with "Concrete Removal".

STATE OF ILLINOIS
DEPARTMENT OF TRANSPORTATION

ROUTE NO.	SECTION	COUNTY	TOTAL SHEETS	SHEET NO.
F.A. 317	15B-1-8	PEORIA & TAZEWELL	303	243
FED. ROAD DIST. NO. 7	ILLINOIS	FED. AID PROJECT-		

SHEET NO.
SHEETS

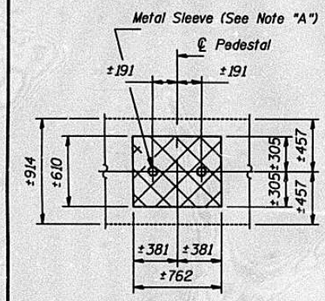

SECTION A-A

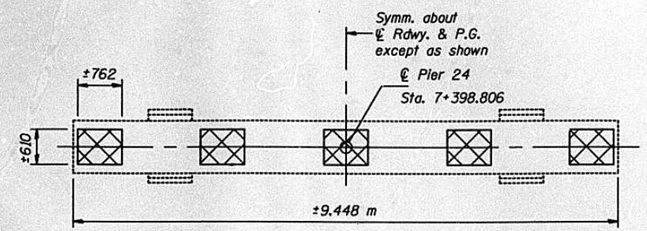

PLAN

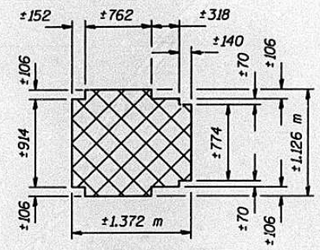

SECTION C-C

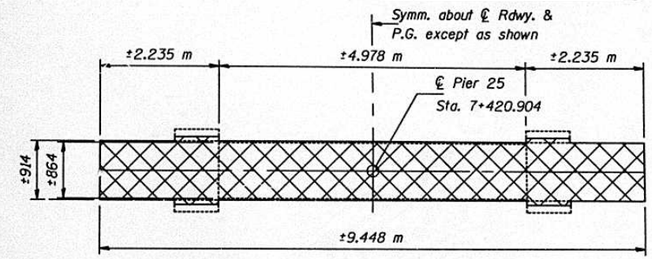

PLAN

ELEVATION - NORTH END

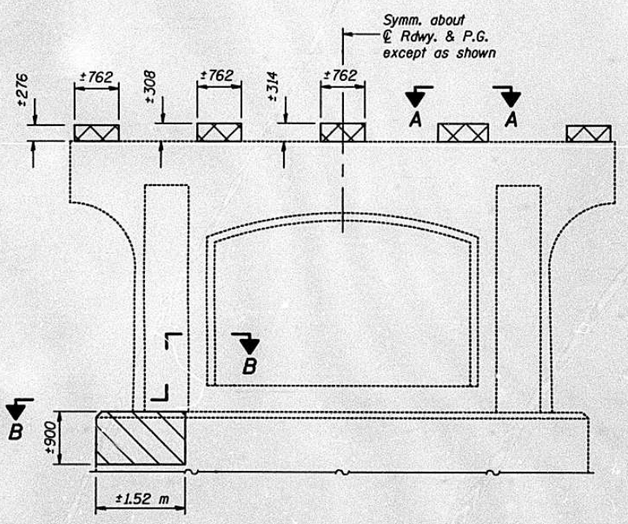

ELEVATION - PIER 24
(Looking East)

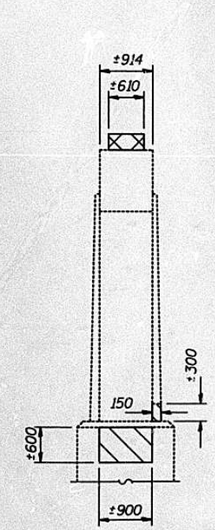

ELEVATION - SOUTH END

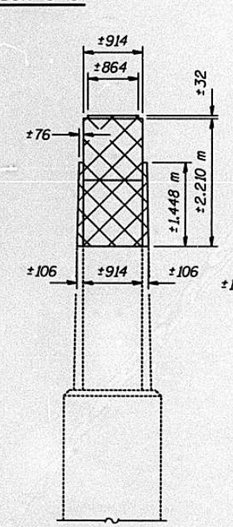

ELEVATION - SOUTH END

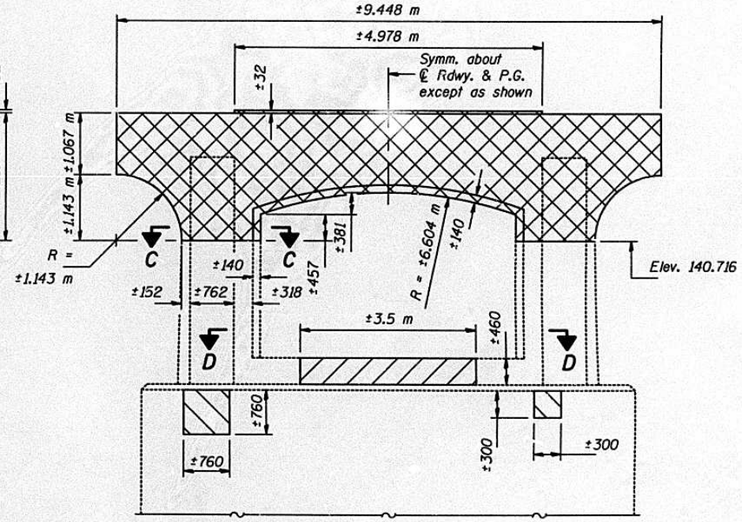

ELEVATION - PIER 25
(Looking West)

BILL OF MATERIAL - PIER 24

Item	Unit	Total
Concrete Removal	m³	0.7
Formed Concrete Repair (Depth Equal To or Less Than 125 mm)	m²	3

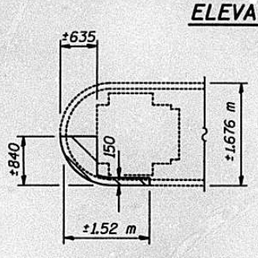

SECTION B-B

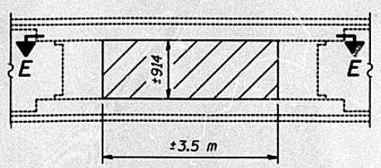

SECTION D-D

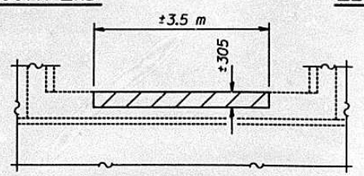

SECTION E-E

BILL OF MATERIAL - PIER 25

Item	Unit	Total
Concrete Removal	m³	14.8
Formed Concrete Repair (Depth Greater Than 125 mm)	m²	6
Formed Concrete Repair (Depth Equal To or Less Than 125 mm)	m²	1

Concrete Removal

Formed Concrete Repair (Depth Greater Than 125 mm)

Formed Concrete Repair (Depth Equal To or Less Than 125 mm)

CONCRETE REMOVAL & REPAIR
PIERS 24 & 25
F.A. ROUTE 317 SECTION 15B-I-8
PEORIA AND TAZEWELL COUNTIES
STATION 6+791.262

DESIGNED	S. Moynihan
CHECKED	D. Verhulst
DRAWN	John F. Schneller Jr.
CHECKED	S.E.M. D.G.V.

March 10, 1999
EXAMINED Greg L. Kasper ENGINEER OF BRIDGE DESIGN
PASSED Ralph E. Anderson ENGINEER OF BRIDGES AND STRUCTURES

Notes: Existing reinforcement extending into new construction shall be cleaned, straightened and incorporated into new construction. Cost included with "Concrete Removal".

DWG. NO. F45

STATE OF ILLINOIS
DEPARTMENT OF TRANSPORTATION

ROUTE NO.	SECTION	COUNTY	TOTAL SHEETS	SHEET NO.
F.A. 317	15B-1-8	PEORIA & TAZEWELL	303	244
FED. ROAD DIST. NO. 7	ILLINOIS	FED. AID PROJECT-		

SHEET NO.
SHEETS

Note "A": 2-76 mm ϕ x 381 mm Metal Sleeves (and covers) made of 20 gage galvanized steel are embedded in concrete under each existing bearing. Flame cut to removal line. If concrete in sleeve is deteriorated, remove and replace with a grout approved by the Department. Cost included with "Concrete Removal".

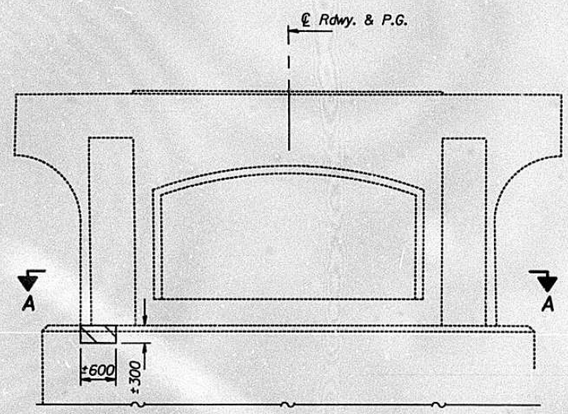

ELEVATION - PIER 26
(Looking West)

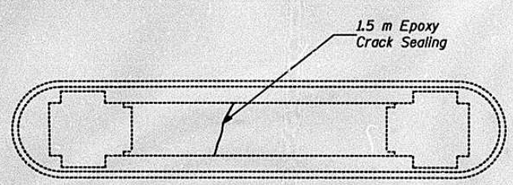

SECTION A-A

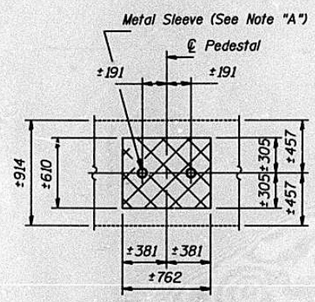

SECTION B-B

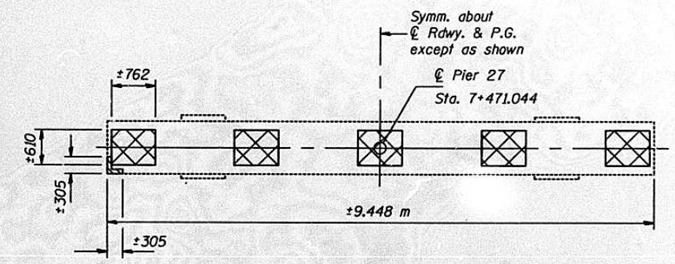

PLAN

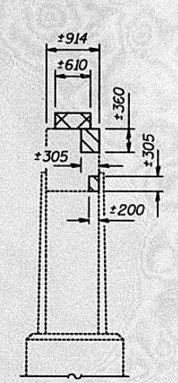

ELEVATION - NORTH END

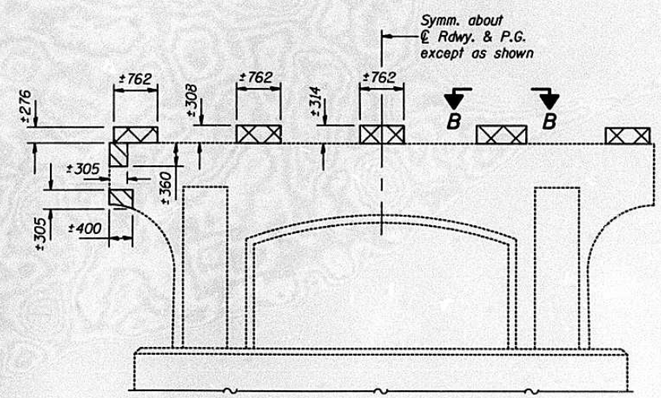

ELEVATION - PIER 27
(Looking East)

BILL OF MATERIAL - PIER 26

Item	Unit	Total
Epoxy Crack Sealing	m	1.5
Formed Concrete Repair (Depth Equal To or Less Than 125 mm)	m²	1

BILL OF MATERIAL - PIER 27

Item	Unit	Total
Concrete Removal	m³	0.7
Formed Concrete Repair (Depth Equal To or Less Than 125 mm)	m²	1

Concrete Removal

Formed Concrete Repair (Depth Equal To or Less Than 125 mm)

DESIGNED S. Moynihan	March 10, 1999
CHECKED D. Verhulst	EXAMINED Greg J. Kasper ENGINEER OF BRIDGE DESIGN
DRAWN John F. Schneller Jr.	PASSED Robert E. Cunkum ENGINEER OF BRIDGES AND STRUCTURES
CHECKED S.E.M. D.G.V.	

Notes: Existing reinforcement extending into new construction shall be cleaned, straightened and incorporated into new construction. Cost included with "Concrete Removal".

CONCRETE REMOVAL & REPAIR
PIERS 26 & 27
F.A. ROUTE 317 SECTION 15B-1-8
PEORIA AND TAZEWELL COUNTIES
STATION 6+791.262

DWG. NO. F46