STATE OF ILLINOIS
DEPARTMENT OF TRANSPORTATION

ROUTE NO.	SECTION	COUNTY	TOTAL SHEETS	SHEET NO.
F.A.P.	05-00130 -00-BR	WILL	41	18
FED. ROAD DIST. NO. 7	ILLINOIS	FED. AID PROJECT-		

SHEET NO. 6 OF 23 SHEETS

CONTRACT NO. 83889

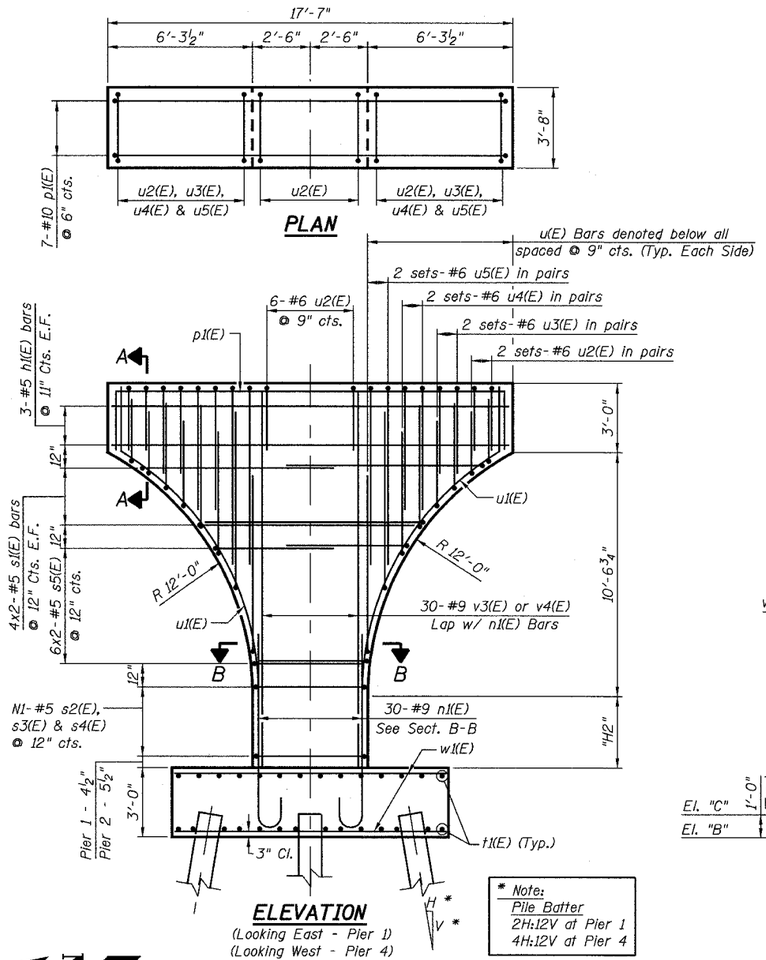

PLAN

ELEVATION
(Looking East - Pier 1)
(Looking West - Pier 4)

* Note:
Pile Batter
2H:12V at Pier 1
4H:12V at Pier 4

Note:
Truss fabricator shall provide a 1" nominal shim pack for each bearing consisting of a 1", ½", ¼", and 2-1/8" shim plates matching the dimensions of the masonry plate provided, including holes for anchor bolts. Cost included in the cost of PEDESTRIAN BRIDGE SUPERSTRUCTURE.

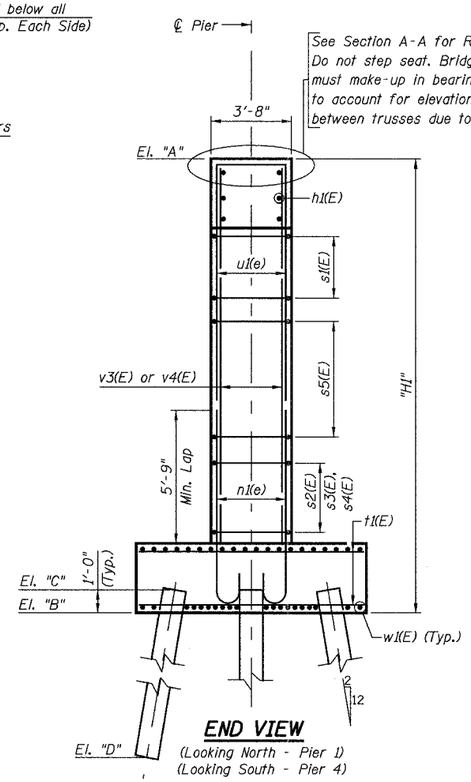

END VIEW
(Looking North - Pier 1)
(Looking South - Pier 4)

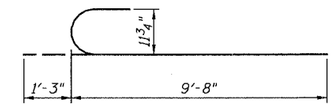

n1(E) Bar

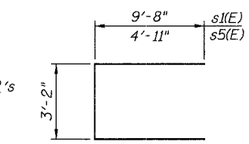

s1(E) & s5(E) Bars

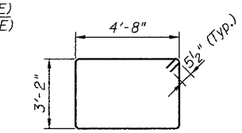

s2(E) Bar

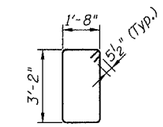

s3(E) Bar

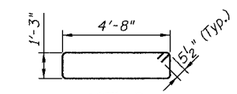

s4(E) Bar

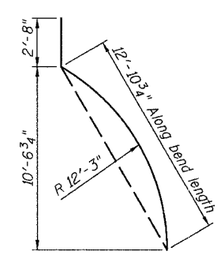

u1(E) Bar

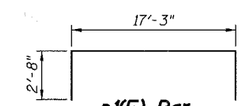

p1(E) Bar

BILL OF MATERIAL

Bar	Size	Length	Shape	No. Pier 1	No. Pier 4
h1(E)	#5	17'-3"		6	6
n1(E)	#9	10'-11"		30	30
p1(E)	#10	22'-6"		7	7
s1(E)	#5	22'-6"		8	8
s2(E)	#5	16'-7"			2
s3(E)	#5	10'-8"			2
s4(E)	#5	12'-8"			2
s5(E)	#5	13'-0"		12	12
t1(E)	#8	9'-8"		28	28
u1(E)	#9	15'-6"		14	14
u2(E)	#6	8'-5"		14	14
u3(E)	#6	11'-7"		8	8
u4(E)	#6	14'-11"		8	8
u5(E)	#6	20'-3"		8	8
v3(E)	#9	13'-5"		30	
v4(E)	#9	14'-6"			30
w1(E)	#8	11'-8"		40	40
Concrete Structures			Cu. Yd.	34	35
Reinforcement Bars, Epoxy Coated			lb.	7,070	7,260
Structure Excavation			Cu. Yd.	33.3	33.3
Concrete Sealer			Sq. Ft.	543	561
Furnishing Steel HP12x53 Piles			Foot	259	315
Driving Piles			Foot	259	315
Test Pile Steel HP 12x53			Each	1	1
Pile Shoes			Each	8	8
Form Liner Textured Surface			Sq. Ft.	141.1	145.5

DATA TABLE

	El. "A"	El. "B"	"H1"	"H2"	N1	El. "C"	El. "D"
Pier 1	701.11	684.45	16'-8"	0'-1¼"	0	685.45	648.45
Pier 4	701.11	683.36	17'-9"	1'-2 5/16"	2	684.36	641.36

NOTES:

1. Reinforcement Bars designated (E) shall be epoxy coated.
2. Concrete clear cover shall be 2" minimum unless noted otherwise.
3. For Anchor Bolt Details, see Sheet 9. Truss fabricator shall determine size and location of anchor bolts. Cost included with PEDESTRIAN TRUSS SUPERSTRUCTURE.
4. All edges shall have standard ¾" chamfers except as noted.
5. Min. Lap for Bar #5 = 2'-2", #6 = 2'-7", #9 = 5'-9".
6. Space Reinforcement in Cap to miss Anchor Bolts.
7. For Architectural treatment of Piers see "Architectural Details" drawing.

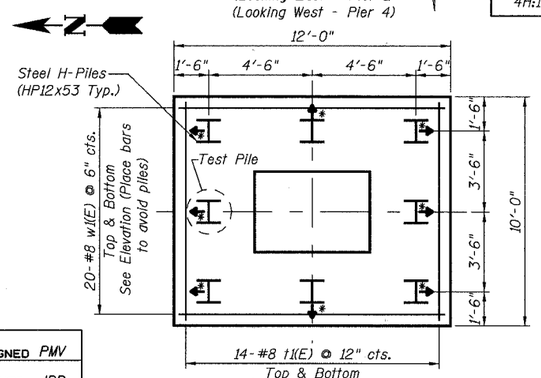

FOOTING PLAN

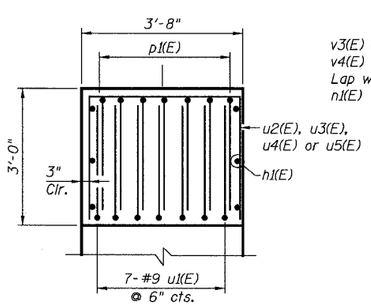

SECTION A-A

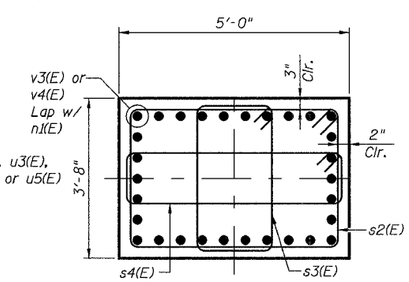

SECTION B-B

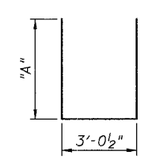

u2(E), u3(E), u4(E) & u5(E) Bars

Bar	"A"
u2(E)	2'-8"
u3(E)	4'-3"
u4(E)	5'-11"
u5(E)	8'-7"

PILE DATA

Type - Steel H-Piles (HP12x53)
Allowable Resistance Available = 90 Kips
Nominal Required Bearing = 270 Kips
Est. Length - 37 ft (Pier 1)
45 ft (Pier 4)
No. Req'd. - 7 per Pier
Test Piles - 1 per Pier

LEGEND

E.F. = Each Face
N.F. = Near Face
F.F. = Far Face

↖ - Indicates direction of Pile Batter

DESIGNED	PMV
CHECKED	JPB
DRAWN	PMV
CHECKED	JPB

REVISIONS

NAME	DATE

URS
100 South Wacker Drive, Suite 500
Chicago, IL 60606
(312) 939-1000

ILLINOIS DEPARTMENT OF TRANSPORTATION
PIER 1 & 4 DETAILS

ROUTE 59 PEDESTRIAN BRIDGE
CITY OF NAPERVILLE, WILL COUNTY

F.A.P. RTE.
STATION 113+02.46
SCALE: N.T.S.

SECTION: 05-00130-00-BR
STRUCTURE NO. 099-6002
DATE: 12/8/2006

pr\naperville_25365506_pedbridge\bridge\pre-final plans\drawings\06_pier 1 & 4 details.dgn 1/10/2007 2:35:11 PM