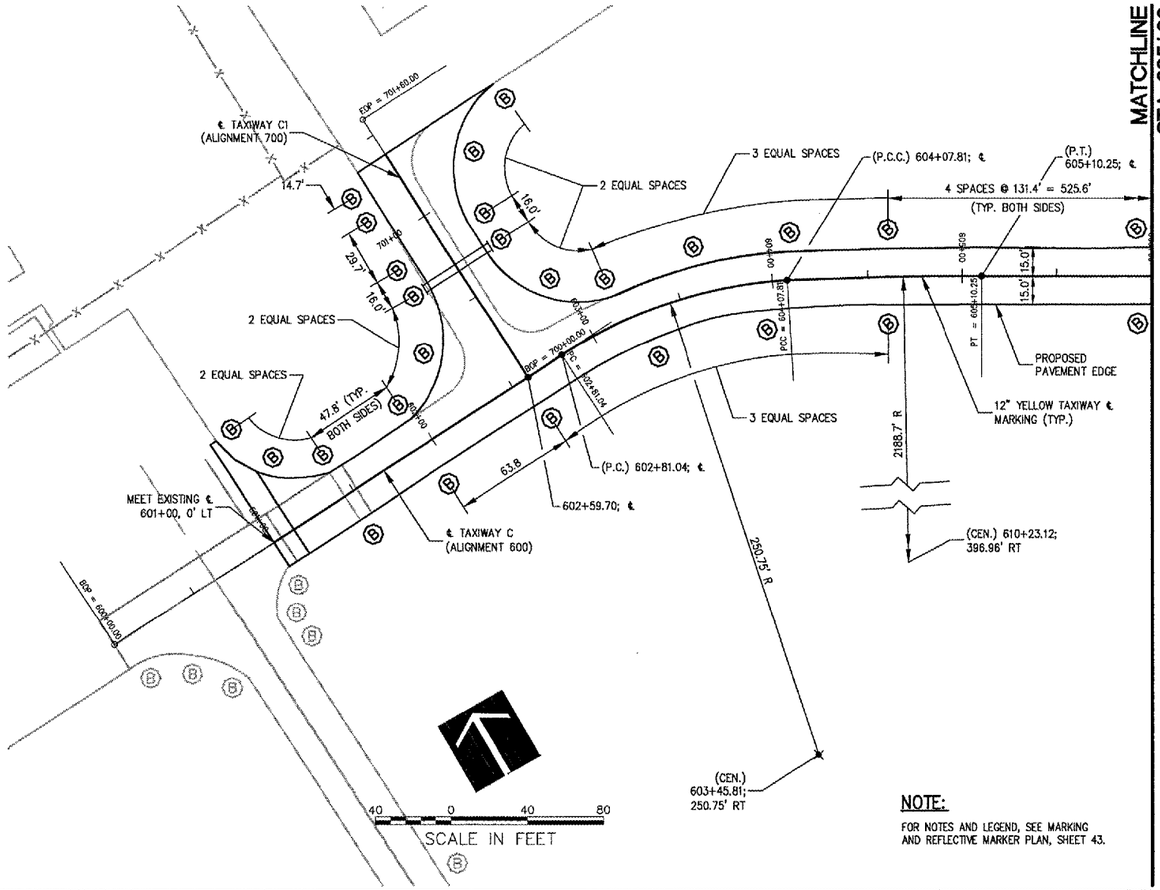

NOTE:

FOR NOTES AND LEGEND, SEE MARKING AND REFLECTIVE MARKER PLAN, SHEET 43.

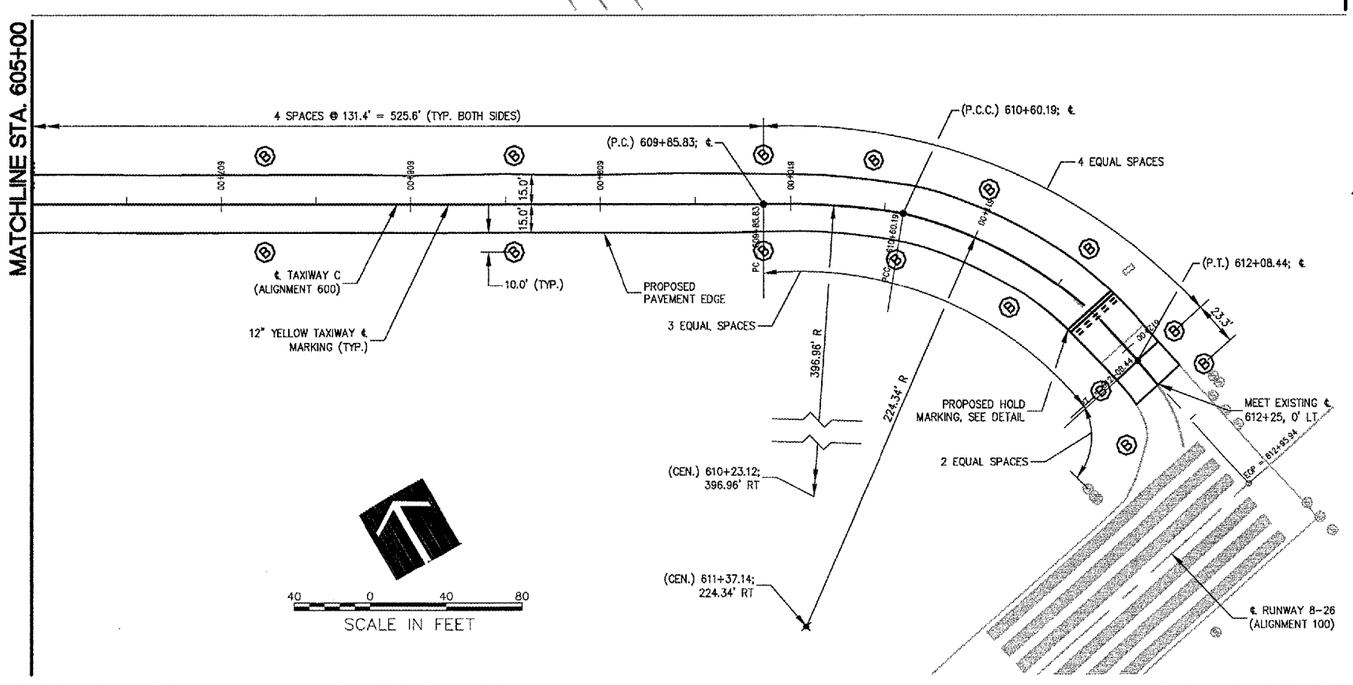

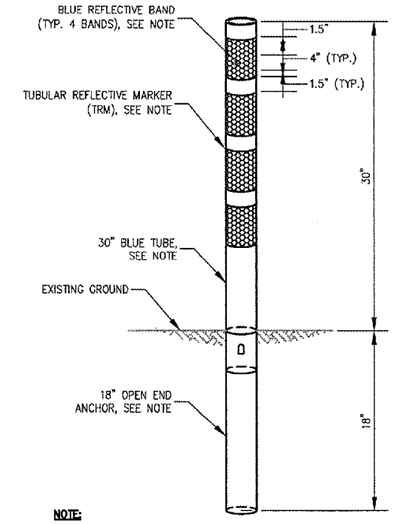

NOTE:

1. TUBULAR REFLECTIVE MARKER (TRM) TO BE CROUSE-HINDS (PART NO. 85350-30-4B) OR EQUAL.
2. TUBULAR REFLECTIVE MARKER TO BE INSTALLED PER MANUFACTURER'S INSTRUCTION.

TAXIWAY REFLECTIVE MARKER (TRM)

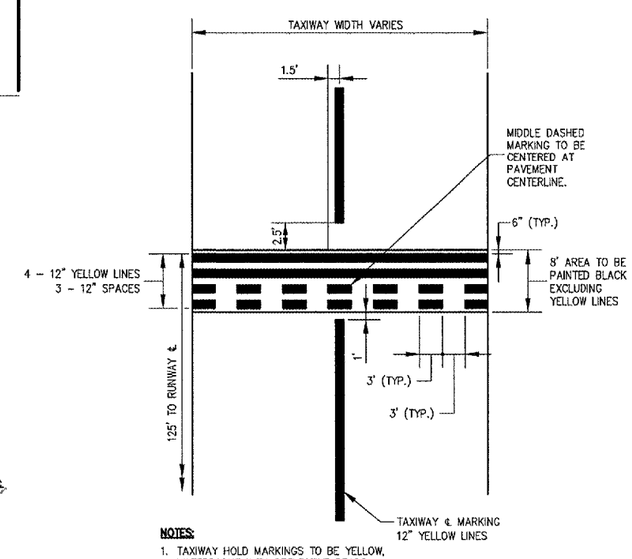

NOTES:

1. TAXIWAY HOLD MARKINGS TO BE YELLOW, WATERBORNE WITH REFLECTIVE BEADS AND PAID UNDER ITEM AR620520.
2. TAXIWAY HOLD MARKINGS TO HAVE BLACK BORDER AND PAID UNDER ITEM AR620525.

TAXIWAY HOLD MARKING

D1021

HANSON

HANSON PROFESSIONAL SERVICES INC.

815 Commerce Drive Suite 200
Oak Brook, Illinois 60523
Telephone: 630.990.3800
Fax: 630.990.3801

City of Dixon

CITY OF DIXON, ILLINOIS

Post Office Box 386
Dixon, Illinois 61021
Telephone: 815.288.1485

DIXON MUNICIPAL AIRPORT
CHARLES R. WALGREEN FIELD

OVERLAY TAXIWAYS A, A1, A2 AND C;
REMOVE AND REPLACE TAXIWAY C1

AIP PROJECT NO. 3-17-0036-B9
IDA PROJECT NO. C73-3549

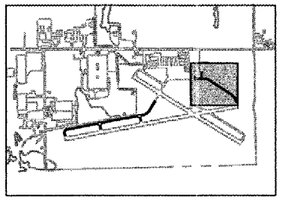

KEY PLAN

No.	Drawing Issue Description	Date	By

Date

MARCH 3, 2006

Sheet Title

PAVEMENT MARKING AND REFLECTIVE MARKER PLAN AND DETAILS TAXIWAYS C AND C1

843-05B8009
Project Number

LDH 11/22/05
Layout By Date

SJM, KLK 11/29/05
Designed By Date

RMH 02/03/06
Reviewed By Date

SJM
Drawn By

46
Sheet No.

I:\05.2285\00841\2589009\DRAWINGS\SHEETS\46-MARKING PLAN 600-1.DWG MAR 10, 2006 10:20AM KLK