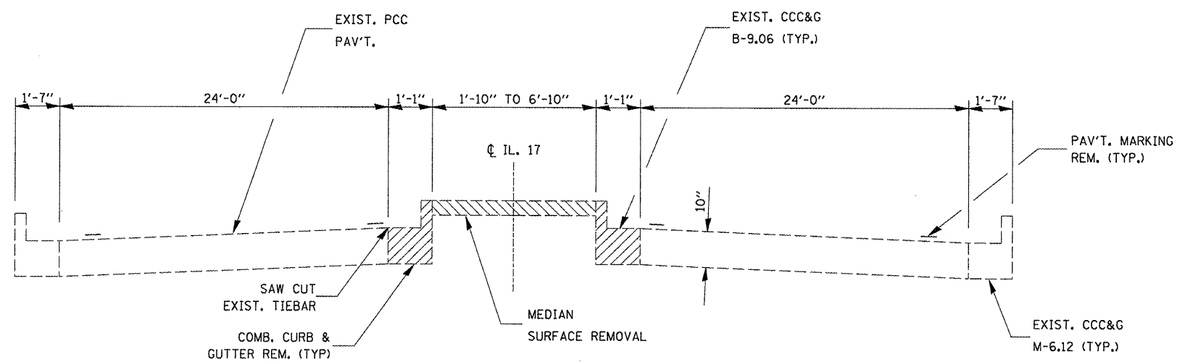

TYPICAL SECTION SHOWING REMOVAL

STA. 37+78 TO STA. 39+50
STA. 40+75 TO STA. 41+70

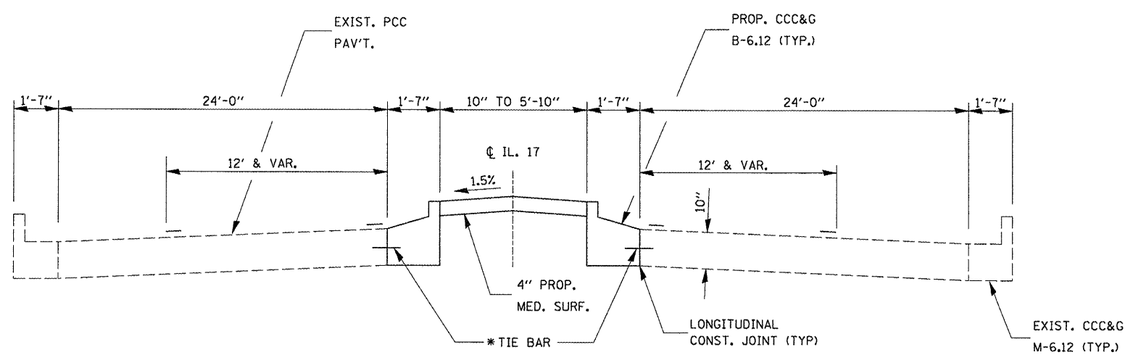

PROPOSED TYPICAL SECTION

STA. 37+78 TO STA. 39+50
STA. 40+75 TO STA. 41+70

* NOTE:
NO. 6 EPOXY COATED TIE BARS 24" LONG AT 24" CENTERS.
GROUTED IN PLACE. TIE BARS WILL BE INCIDENTAL TO CCC&G B-6.12

FILE NAME = c:\projects\ed03208\details.dgn	USER NAME = corcoranlm	DESIGNED -	REVISED -	STATE OF ILLINOIS DEPARTMENT OF TRANSPORTATION	TYPICAL SECTIONS	F.A.P RTE.	SECTION	COUNTY	TOTAL SHEETS	SHEET NO.
		DRAWN -	REVISED -			41	(15Z)1	LIVINGSTON	10	3
	PLOT SCALE = 100.0000 ' / IN.	CHECKED -	REVISED -					CONTRACT NO. 66764		
	PLOT DATE = Mar 19, 2008 - 10:39:21 AM	DATE -	REVISED -		SCALE: SHEET NO. OF SHEETS STA. TO STA.	FED. ROAD DIST. NO.	ILLINOIS	FED. AID PROJECT		