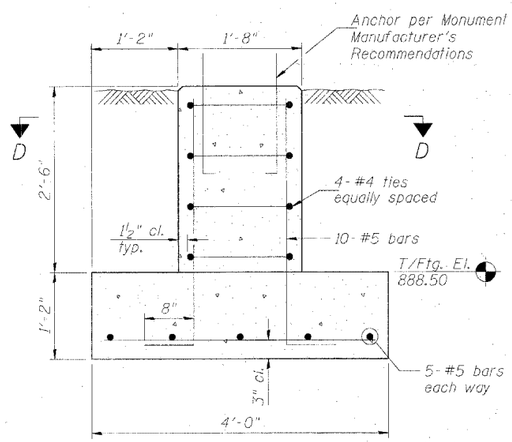

SECTION A-A
MONUMENT TYPE A - FOUNDATION
(Foundation reinforcement from Section B-B is continuous through this Section.)

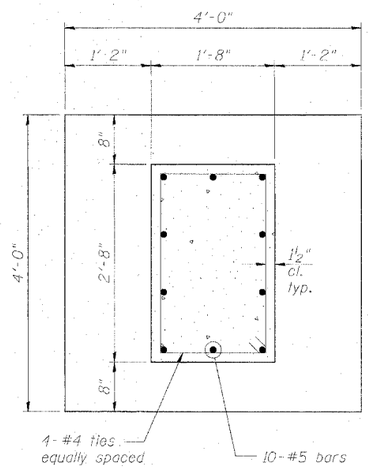

SECTION D-D

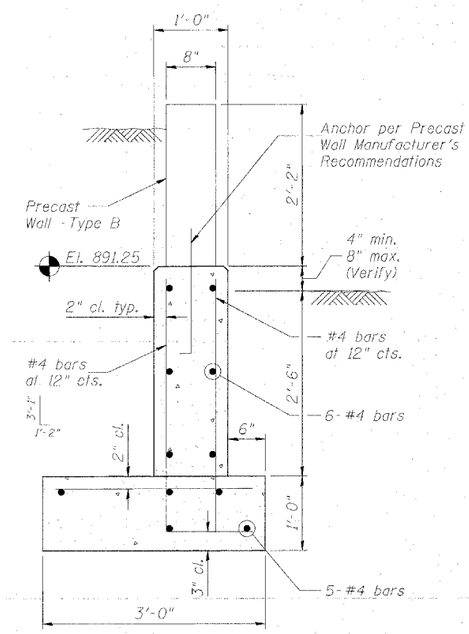

SECTION B-B
PRECAST WALL TYPE B - FOUNDATION
(Foundation reinforcement from this Section is continuous through Section A-A.)

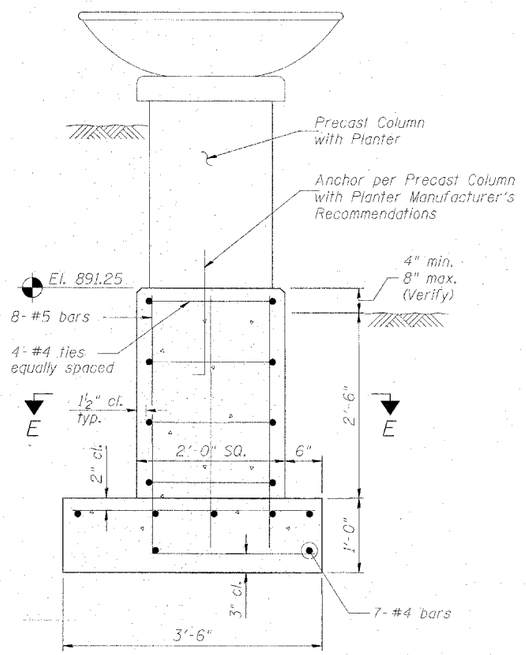

SECTION C-C
PRECAST COLUMN W/ PLANTER FOUNDATION

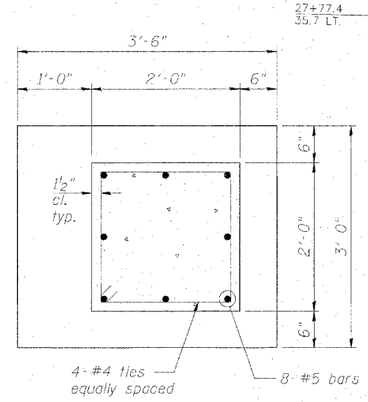

SECTION E-E

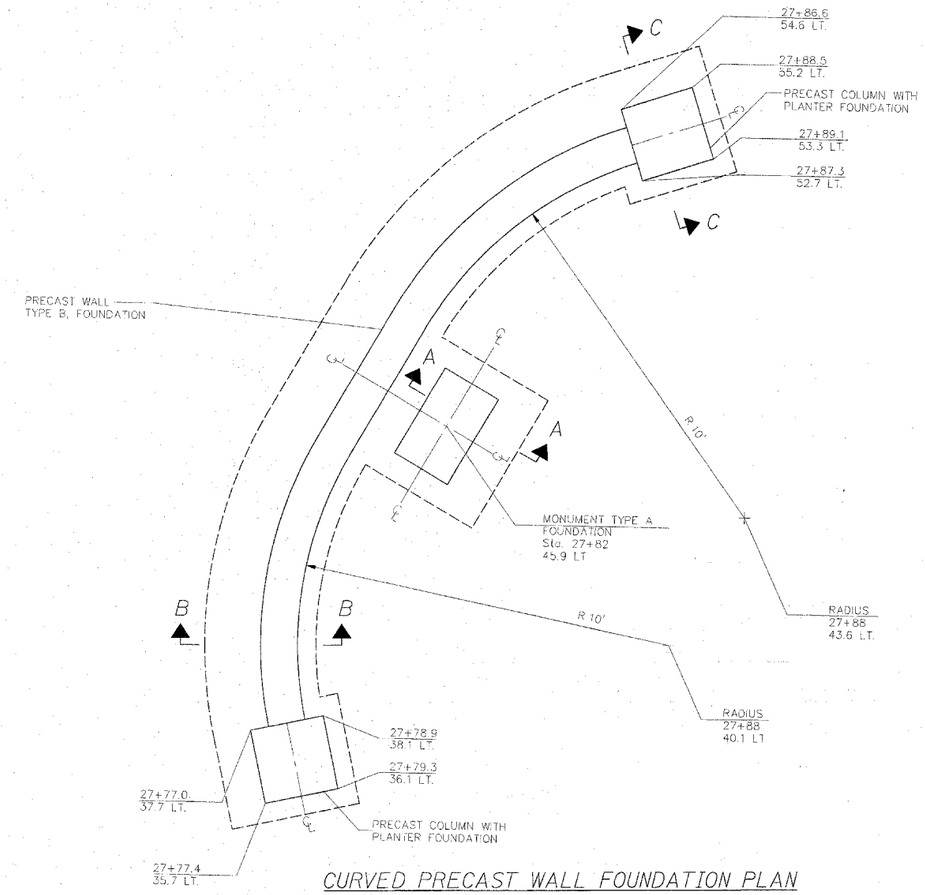

CURVED PRECAST WALL FOUNDATION PLAN
10th STREET

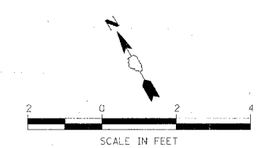

HANSON
Hanson Professional Services Inc.
© Copyright Hanson Professional Services Inc. 2007

LAYOUT	FLN	02/25/08	Hussu0041
DRAWN	MGM	04/10/08	04\14\2008, 11:35 AM
REVIEWED	FLN	04/10/08	I:\05Jobs\05r150\A\CADD\Struct\Sheet\S-PRECAST WALL.dgn

FILE NAME = I:\05Jobs\05r150\A\CADD\Struct\Sheet\S-PRECAST WALL.dgn	USER NAME = MWH	DESIGNED - FLN	REVISED -	STATE OF ILLINOIS DEPARTMENT OF TRANSPORTATION	FOUNDATION DETAILS EAST LINCOLN HIGHWAY LIGHTING AND STREETSCAPE DEKALB, IL
	PLOT SCALE = AS SHOWN	DRAWN MGM	REVISED -		
	PLOT DATE = 04\14\2008, 11:35 AM	CHECKED - FLN	REVISED -		
		DATE - 04/10/08	REVISED -		SCALE: AS SHOWN SHEET NO. OF SHEETS STA. TO STA.

F.A.P. RTE.	SECTION	COUNTY	TOTAL SHEETS	SHEET NO.
567	06-00173-00-LT	DEKALB	41	40
		CONTRACT NO. 87337		
FAP 567	ILLINOIS ITCP 32025			