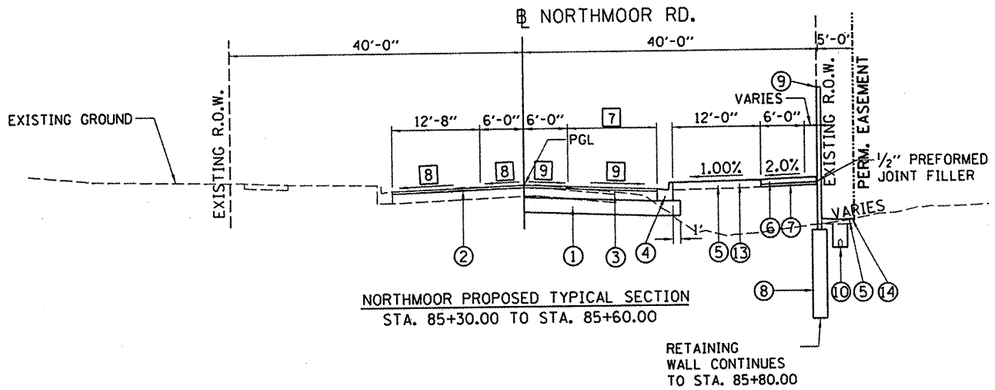

NORTHMOOR PROPOSED TYPICAL SECTION
STA. 85+30.00 TO STA. 85+60.00

7 LANE WIDTH
STA. 85+30.00 TO STA. 85+60.00 = TRANSITIONS FROM 12'-0" TO 11'-10"

8 CROSS SLOPE
STA. 85+30.00 TO STA. 85+60.00 = TRANSITIONS FROM -2.00% TO -1.00%

9 CROSS SLOPE
STA. 85+30.00 TO STA. 85+60.00 = TRANSITIONS FROM -2.00% TO -1.56%

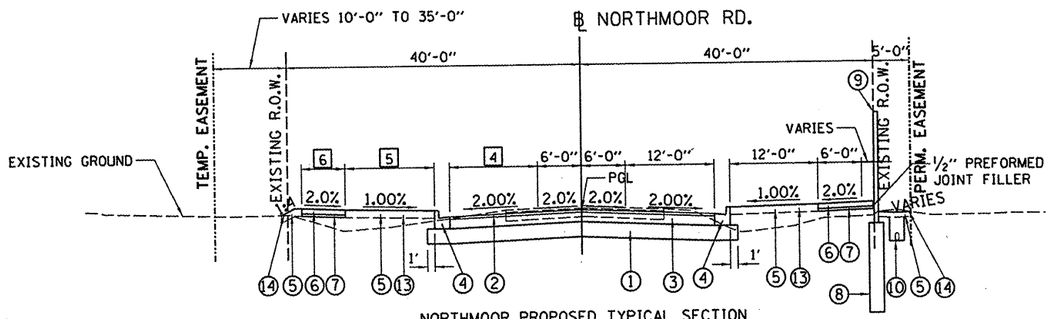

NORTHMOOR PROPOSED TYPICAL SECTION
STA. 75+82.10 TO STA. 85+30.00

4 LANE WIDTH
STA. 75+82.10 TO STA. 85+00.00 = 12'-0"
STA. 85+00.00 TO STA. 85+30.00 = TRANSITIONS FROM 12'-0" TO 12'-8"

5 BUFFER WIDTH
STA. 75+82.10 TO STA. 85+00.00 = 12'-0"
STA. 85+00.00 TO STA. 85+30.00 = TRANSITIONS FROM 12'-0" TO 11'-0"

6 SIDEWALK WIDTH
STA. 75+82.10 TO STA. 85+00.00 = 6'-0"
STA. 85+00.00 TO STA. 85+30.00 = TRANSITIONS FROM 6'-0" TO 4'-10"

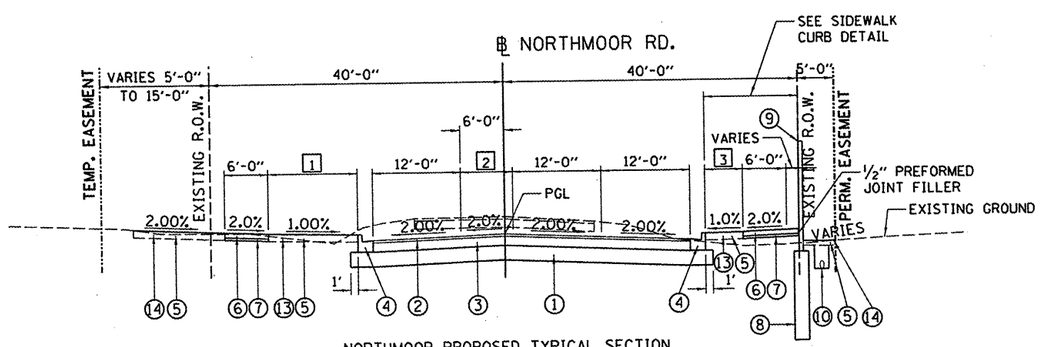

NORTHMOOR PROPOSED TYPICAL SECTION
STA. 72+00.00 TO STA. 75+82.10

1 BUFFER WIDTH
STA. 72+00.00 TO STA. 72+14.47 = TRANSITIONS FROM 0'-0" TO 12'-0"
STA. 72+14.47 TO STA. 75+82.10 = 12'-0"

2 MEDIAN WIDTH
STA. 72+00.00 TO STA. 72+62.13 = 12'-6"
STA. 72+62.13 TO STA. 75+82.10 = TRANSITIONS FROM 12'-6" TO 0'-0"

3 BUFFER WIDTH
STA. 72+00.00 TO STA. 72+89.01 = 0'-0"
STA. 72+89.01 TO STA. 75+82.10 = TRANSITIONS FROM 1'-0" TO 12'-0"

LEGEND

1. PROPOSED SUB-BASE GRANULAR MATERIAL, TYPE A, 12"
2. PROPOSED POLYMERIZED HOT-MIX ASPHALT SURFACE COURSE, MIX "D", N50, 2"
3. PROPOSED HOT-MIX ASPHALT BINDER COURSE, IL-19.0, N50, 7 3/4" (TOP 3 3/4" TO BE POLYMERIZED)
4. PROPOSED COMBINATION CONCRETE CURB AND GUTTER, TYPE B-6.18
5. PROPOSED TOPSOIL FURNISH AND PLACE, 6"
6. PORTLAND CEMENT CONCRETE SIDEWALK, 4"
7. PROPOSED SUB-BASE GRANULAR MATERIAL, TYPE A, 4"
8. PROPOSED SCREENING WALL FOUNDATION
9. PROPOSED PRECAST SCREENING WALL (RETAINING WALL, SPECIAL)
10. PROPOSED PIPE UNDERDRAIN
11. COMBINATION CONCRETE CURB & SIDEWALK 4 INCH (SPECIAL)
12. CONCRETE GUTTER FLAG
13. PROPOSED SODDING, SALT TOLERENT
14. PROPOSED SODDING

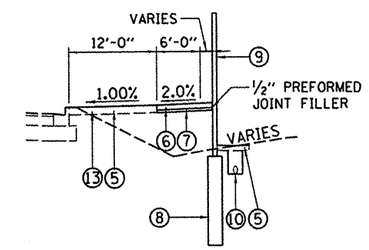

SIDEWALK WITH RETAINING WALL DETAIL
STA. 85+60.00 TO STA. 85+98.48

NOTE: RETAINING WALL ENDS AT STA. 85+80.00

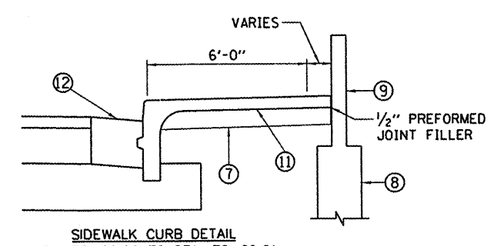

SIDEWALK CURB DETAIL
STA. 72+00.00 TO STA. 72+89.01

© Copyright Hanson Professional Services Inc. 2012

HANSON
Hanson Professional Services Inc.

FILE NAME = I:\09Jobs\09L0027A\CADD\Road\Sheet\c-503typ.dgn	USER NAME = dawso00878	DESIGNED - DLC	REVISED -
	PLOT SCALE = 20.0000 ' / in.	DRAWN - DLC	REVISED -
	PLOT DATE = 04\02\2012	CHECKED - MGD	REVISED -
		DATE - 03/27/12	REVISED -

STATE OF ILLINOIS
DEPARTMENT OF TRANSPORTATION

NORTHMOOR ROAD STAGE 2 IMPROVEMENT
PROPOSED TYPICAL SECTIONS
NORTHMOOR RD.

SCALE: N.T.S. | SHEET NO. OF SHEETS | STA. TO STA.

F.A.U. RTE.	SECTION	COUNTY	TOTAL SHEETS	SHEET NO.
6647	05-00302-01-PV	PEORIA	125	6
	11-00047-03-PV	CONTRACT NO. 89525		
FED. ROAD DIST. NO.	ILLINOIS	FED. AID PROJECT	M-5093(137)	