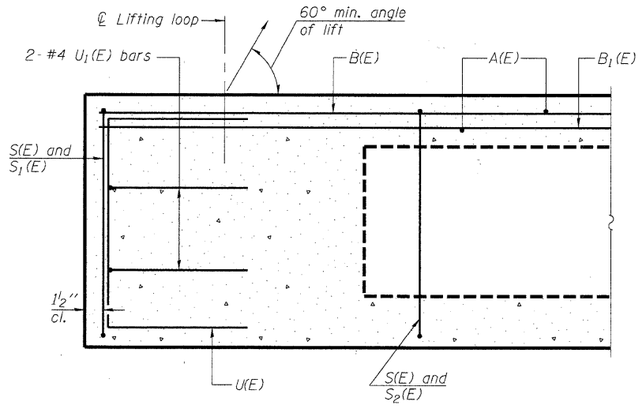


## SECTION A-A

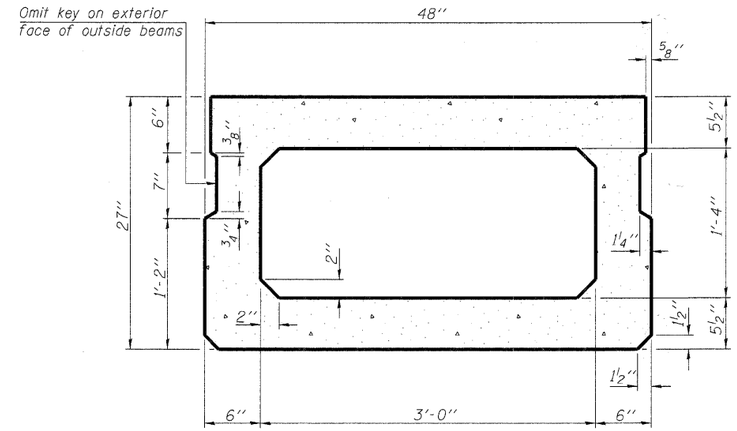


## SECTION B-B

(Showing dimensions)

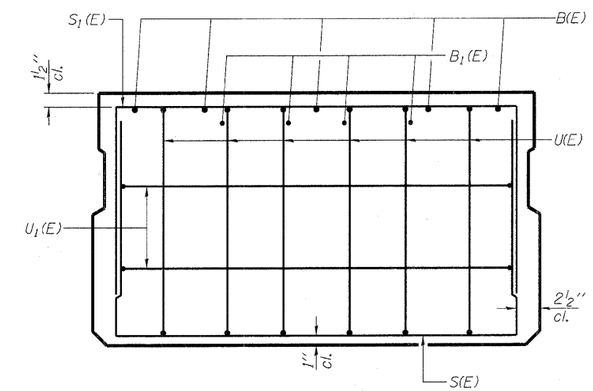


## VIEW C-C

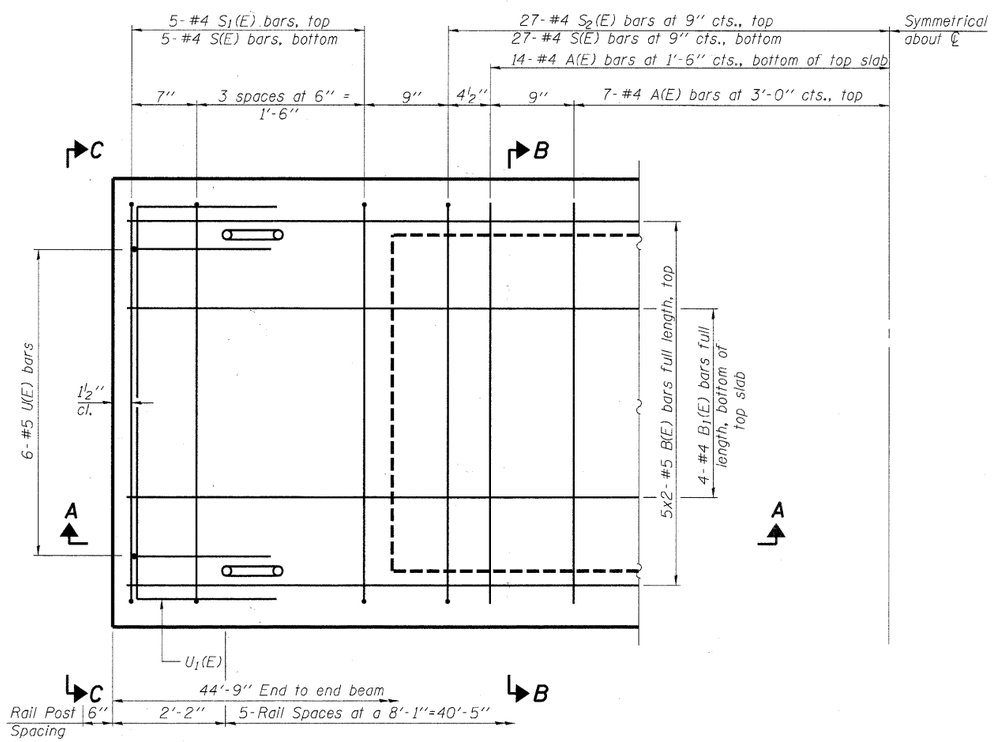


## PLAN VIEW

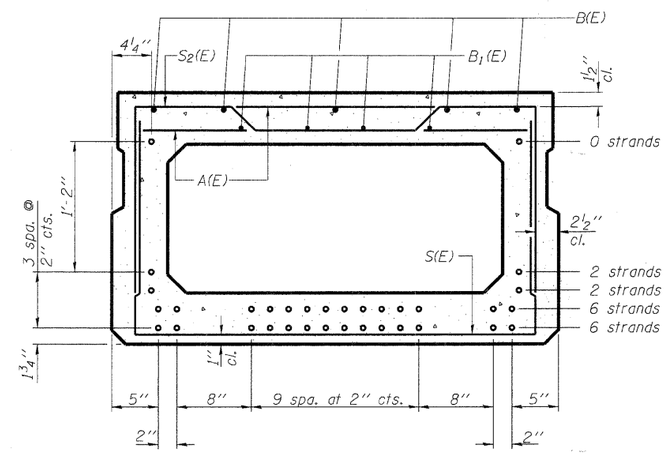


## SECTION B-B

(Showing reinforcement and permissible strand locations)

Note: Place the number of strands specified in each row symmetrically about the centerline of beam in the permissible strand locations shown.

## BAR LIST
## ONE BEAM ONLY

(For information only)

| Bar | No. | Size | Length | Shape |
|---|---|---|---|---|
| A(E) | 14 | #4 | 3'-7" | — |
| B(E) | 10 | #5 | 23'-6" | — |
| $B_1(E)$ | 12 | #4 | 16'-2" | — |
| S(E) | 64 | #4 | 7'-5" | ⊔ |
| $S_1(E)$ | 10 | #4 | 6'-11" | ⊓ |
| $S_2(E)$ | 54 | #4 | 7'-2" | ⊓ |
| U(E) | 12 | #5 | 4'-6" | ⊏ |
| $U_1(E)$ | 4 | #4 | 6'-0" | ⊓ |

Note: See sheet 1 of 7 for additional details and Bill of Material.

Note: Spacing of S(E) and $S_2(E)$ bars may be adjusted up to 4" in the immediate area of the transverse tie diaphragms to miss the block outs for the transverse ties.

## MINIMUM BAR LAP

#4 bar = 2'-0"
#5 bar = 2'-6"

PD-2748-0 7-1-10

PRINTED DATE: 2/21/2012
FILE NAME = n:\projects\coles co highway dept\tr 282\cadd\drawings\Sheets\06-355 Super.dgn

| | |
|---|---|
| DESIGNED - | DF |
| CHECKED - | |
| DRAWN - | ADG |
| CHECKED - | |

ESI CONSULTANTS, LTD
753 WINDSOR ROAD
CHARLESTON, IL 61920
(217) 348-1909
WWW.ESICONSULTANTSLTD.COM
ILLINOIS DEPARTMENT OF PROFESSIONAL REGULATION REGISTRATION #184-003685

**TR 282**
**COLES COUNTY**

**27" x 48" PPC DECK BEAM**
**STRUCTURE NO. 015-3427**
SHEET NO 2 OF 7 SHEETS

| TWP RTE | SECTION | COUNTY | TOTAL SHEETS | SHEET NO |
|---|---|---|---|---|
| 282 | 07-05136-00-BR | COLES | 13 | 06 |
| | | CONTRACT NO _____ | | |
| | | ILLINOIS FEDERAL AID PROJECT | | |