F.A.I. RTE.	SECTION	COUNTY	TOTAL SHEETS	SHEET NO.
94	*	COOK	907	377
STA. 1308+00.00		TO STA. 1321+00.00		
FED. ROAD DIST. NO.	ILLINOIS	FED. AID PROJECT		

* (1516.1,1717 & 1818) R-9

62695

NOTES:

1. SEE DRAWINGS EI-100 AND EI-101 FOR ELECTRICAL SYMBOLS AND ABBREVIATIONS.
2. COORDINATE ALL WORK WITH IDOT CONTRACTS 62583 AND 62694.
3. UNLESS NOTED OTHERWISE, ALL ITEMS AND WORK SHOWN IN HEAVY LINE WEIGHT ON THIS DRAWING ARE PROPOSED NEW ITEMS AND WORK.
4. SIGN STRUCTURE SHALL BE PROVIDED UNDER THIS CONTRACT. SIGN LUMINAIRES, DISCONNECT SWITCH, WIRING AND CONNECTIONS SHALL BE PROVIDED UNDER CONTRACT 62583.
5. REFER TO STRUCTURAL DRAWINGS AND EI-104 FOR CONDUIT INSTALLATION DETAILS FOR LIGHT TOWER FOUNDATION MOUNTED ON WALL.
6. REFER TO SHEETS EI-106 AND EI-110 FOR DETAILS.
7. REFER TO SHEETS EI-102 AND ME-04 FOR DUCTBANK INSTALLATION DETAILS.

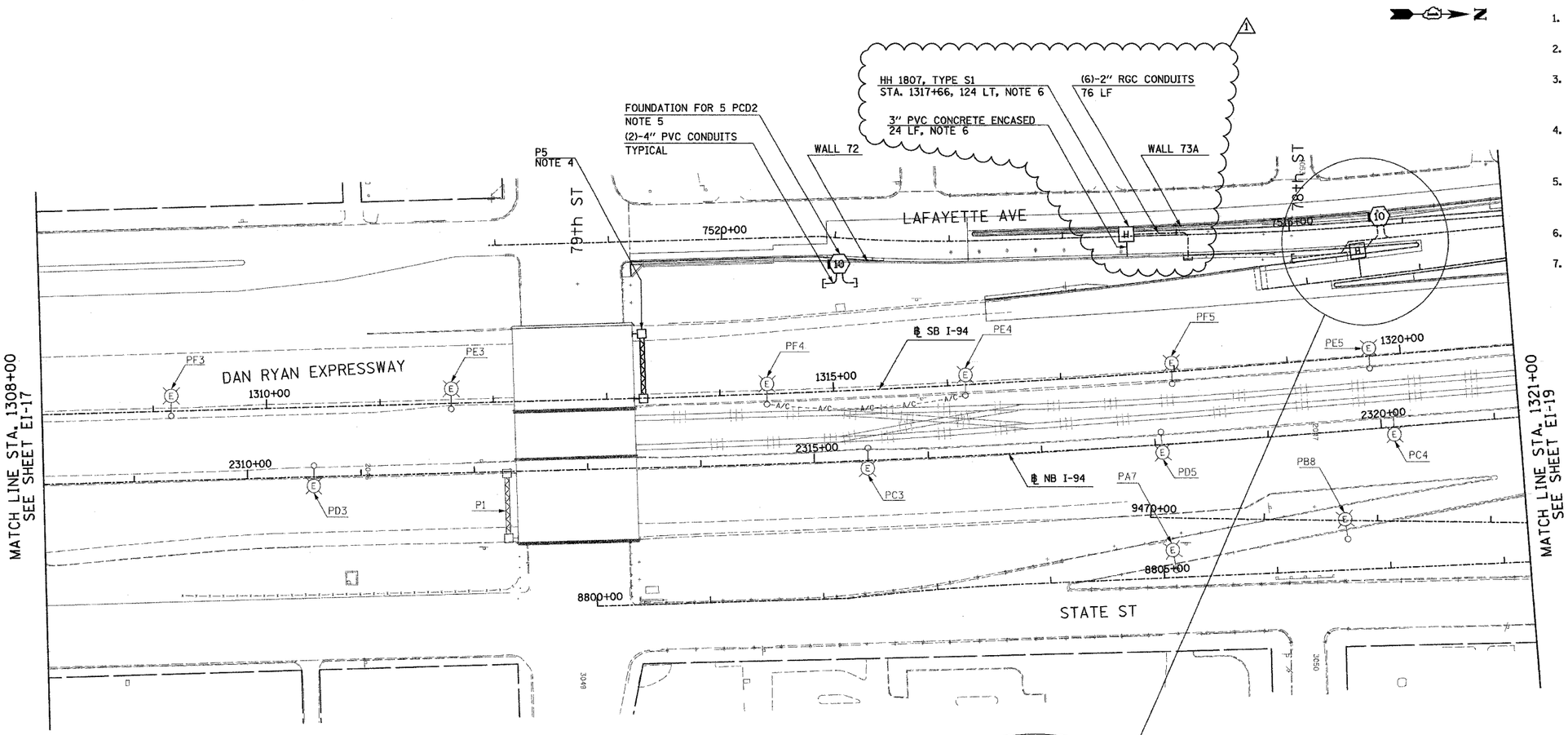

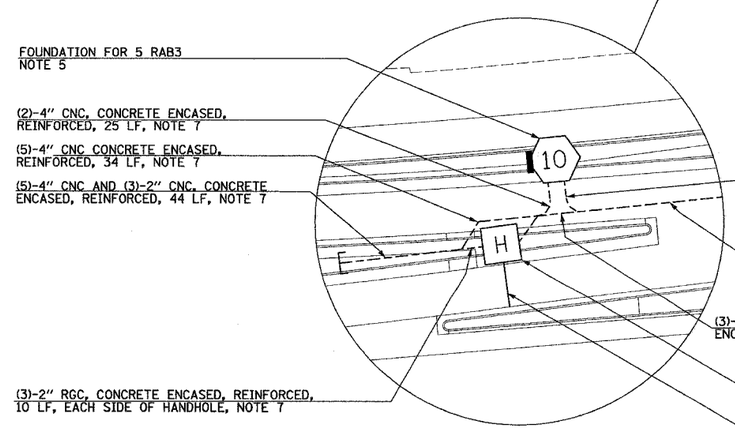

0 50' 100'
1" = 50'

17B/EI-18

SINGH
SINGH & ASSOCIATES, INC.
CONSULTING ENGINEERS
300 W. ADAMS ST.
CHICAGO, IL 60606
TEL: (312) 629-0240
FAX: (312) 629-8449

REVISIONS	
NAME	DATE
REVISED	5/06/05
ADDENDUM 1	05/27/05

ILLINOIS DEPARTMENT OF TRANSPORTATION

F.A.I. 94 (DAN RYAN EXPRESSWAY)

ELECTRICAL INFRASTRUCTURE PLANS
PROPOSED IMPROVEMENTS

SCALE: 1"=50' DRAWN BY: VG

DATE: MARCH 25, 2005 CHECKED BY: TM

J:\V5\Dgn\RL02\753B_EI-18-07B.dgn
5/26/2005 3:50:45 PM