F.A.I. RTE.	SECTION	COUNTY	TOTAL SHEETS	SHEET NO.
94	*	COOK	907	545
STA. 1200+00.00		TO STA. 1365+00		
FED. ROAD DIST. NO.	ILLINOIS	FED. AID PROJECT		

* (1516.1, 1717 & 1818) R-9

62695

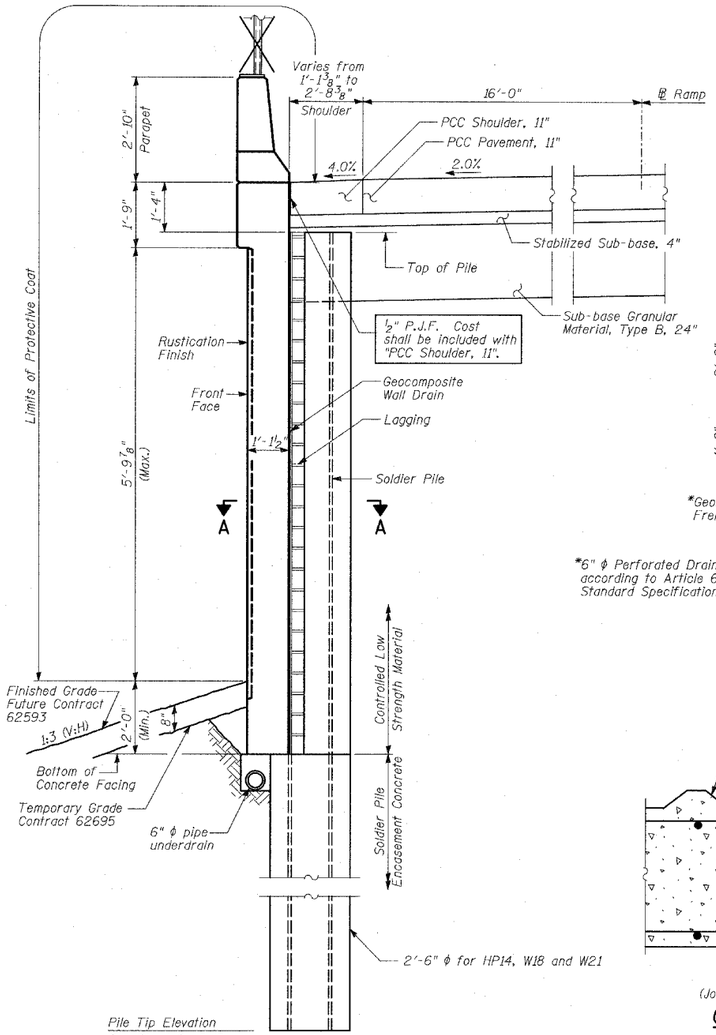

CROSS SECTION THRU WALL

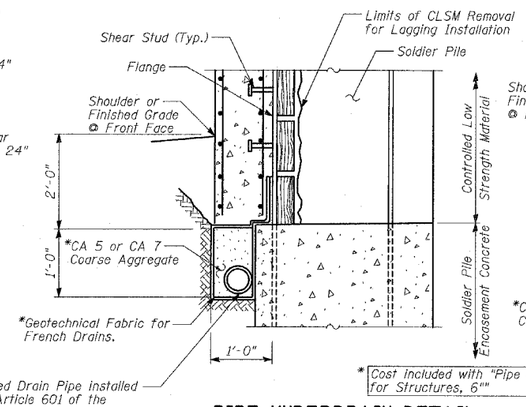

PIPE UNDERDRAIN DETAIL AT SOLDIER PILE

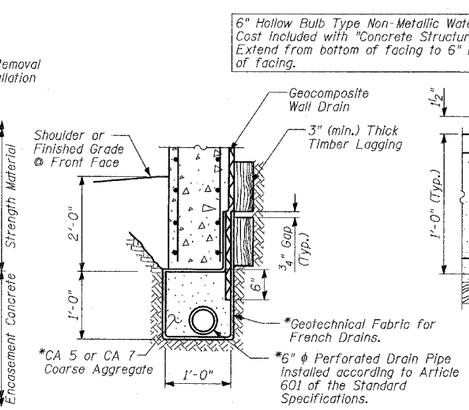

PIPE UNDERDRAIN DETAIL BETWEEN SOLDIER PILES

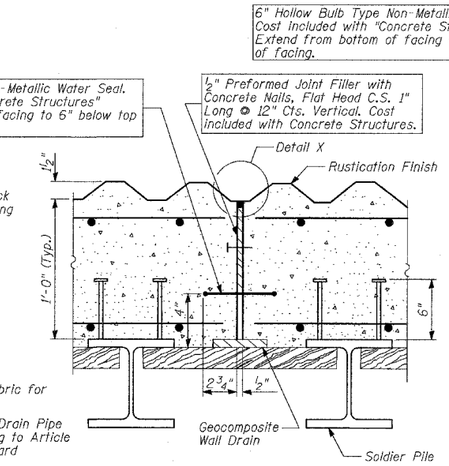

EXPANSION JOINT DETAILS
(Joint in Valley)

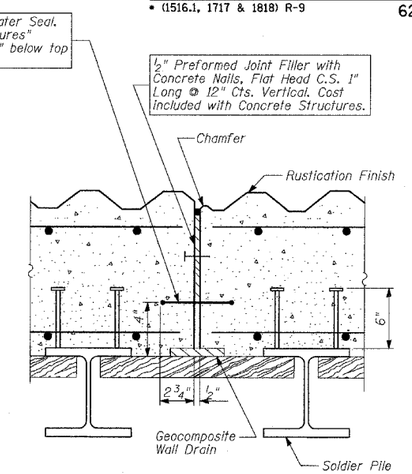

EXPANSION JOINT DETAILS
(Joint on Diagonal)

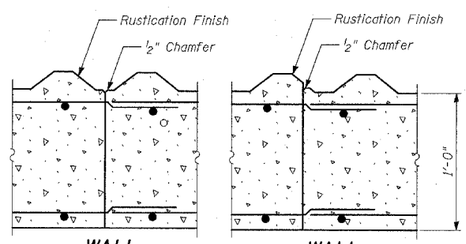

WALL
(Joint in Valley)

WALL
(Joint on Diagonal)

CONSTRUCTION JOINT DETAILS

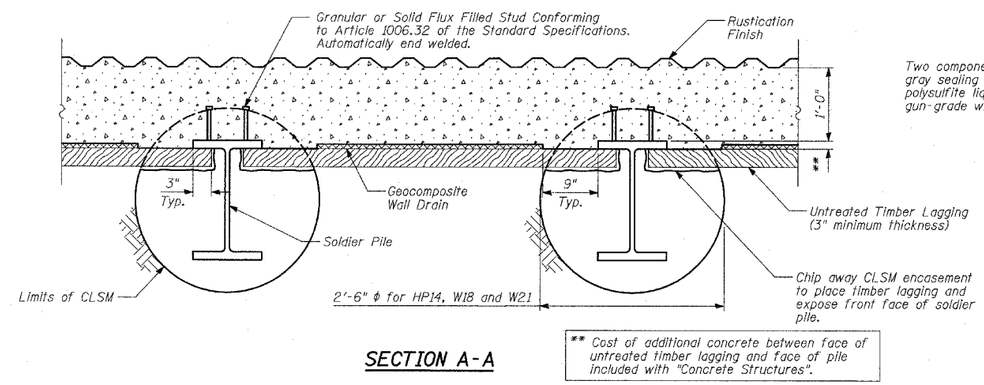

SECTION A-A

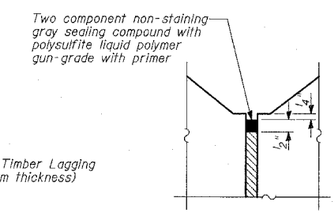

DETAIL X

NOTES:

1. The geocomposite wall drain shall be constructed according to Section 591 of the Standard Specifications.
2. The Contractor is responsible for the design and performance of the lagging using no less than 3" nominal rough-sawn thickness and the minimum tabulated unit stress in bending (f_b), used in the design of timber lagging shall be 1000 psi.
3. Stud shear connectors shall be 3/4" ϕ x 6" granular or solid flux filled headed studs, automatically end welded to the front flange of the soldier piles.

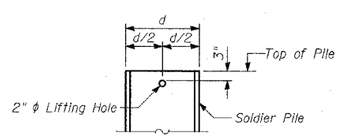

LIFTING HOLE DETAIL

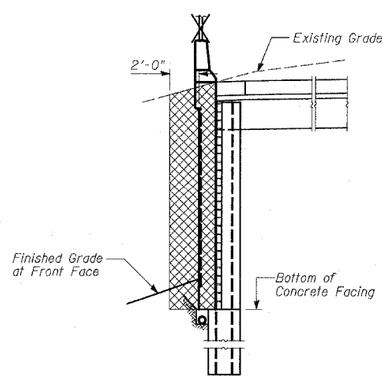

STRUCTURE EXCAVATION
(For Proposed Wall)

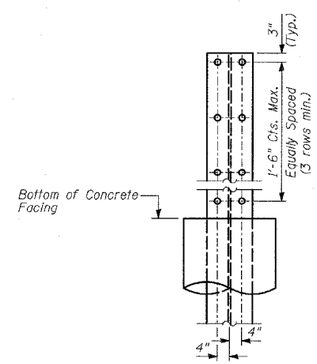

SHEAR STUD CONNECTOR DETAIL

BILL OF MATERIAL

ITEM	UNIT	TOTAL
Structure Excavation	CU YD	618
Stud Shear Connectors	EACH	1,178
Untreated Timber Lagging	SQ FT	4,754
Geocomposite Wall Drain	SQ YD	581
Pipe Underdrains for Structures, 6"	FOOT	945

SHEET 10 OF 18

REVISIONS	
NAME	DATE
REVISED	04/15/05

ILLINOIS DEPARTMENT OF TRANSPORTATION

F.A.I. 94 (DAN RYAN EXPRESSWAY)
RETAINING WALL ALONG LAFAYETTE AVE.
89TH ST. TO 87TH ST.
WALL 39
WALL CROSS SECTIONS & DETAILS

S.N. 016-W951 DESIGNED BY: MI, TB
SCALE: N.T.S. DRAWN BY: DJR
DATE: MARCH 25, 2005 CHECKED BY: TD, MI

TYLIN INTERNATIONAL

$FILE$ $TIME$ $DATE$