| F.A.I. RTE. | SECTION | COUNTY | TOTAL SHEETS | SHEET NO. |
|---|---|---|---|---|
| 94 | * | COOK | 907 | 664 |
| STA. 1200+00.00 | | TO STA. 1365+00 | | |
| FED. ROAD DIST. NO. | ILLINOIS | FED. AID PROJECT | | |

* (1516.1, 1717 & 1818) R-9

62695

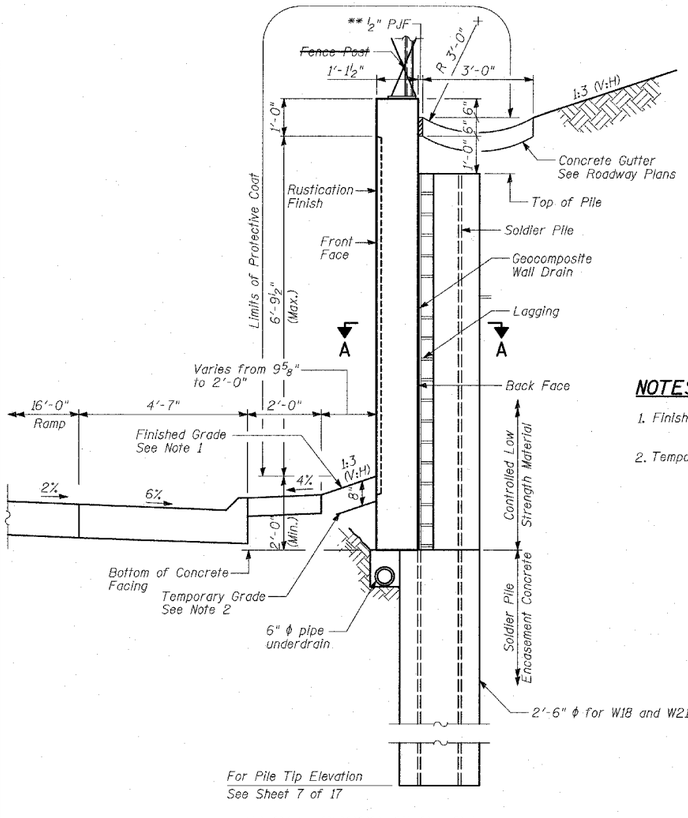


## TYPICAL CROSS-SECTION

## NOTES:

1. Finished Grade: Contract 62593 - Sta. 139+64.27 to Sta. 143+50.73
   Contract 62695 - Sta. 143+50.73 to Sta. 146+27.41
2. Temporary Grade: Contract 62695 - Sta. 139+64.27 to Sta. 143+50.73

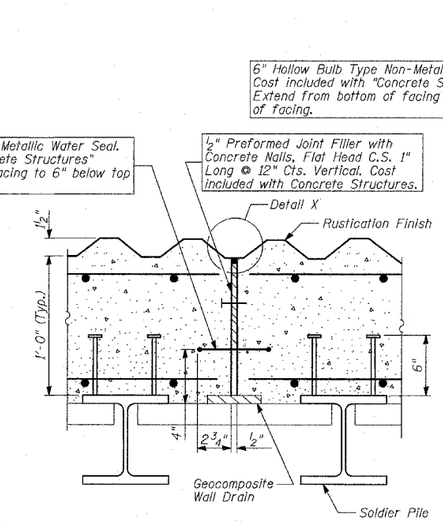


## EXPANSION JOINT DETAILS
(Joint in Valley)

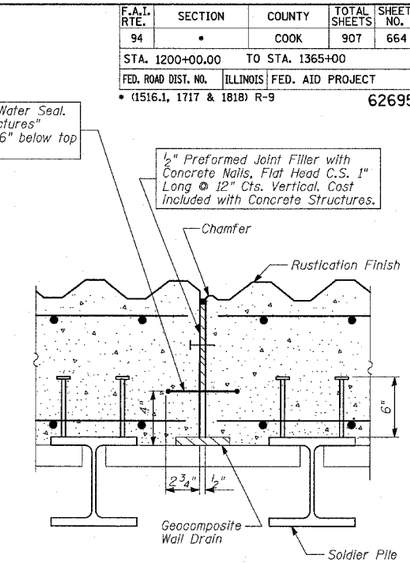


## EXPANSION JOINT DETAILS
(Joint on Diagonal)

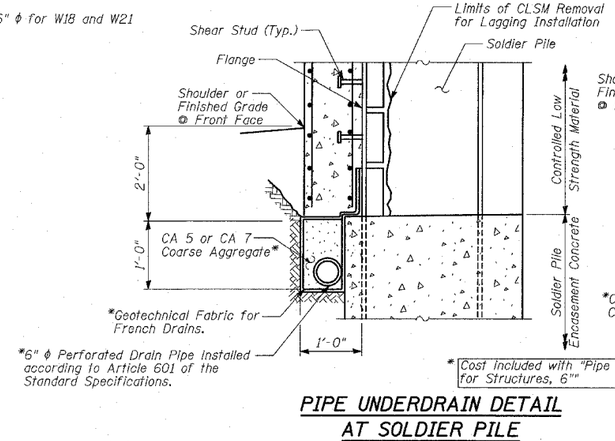


## PIPE UNDERDRAIN DETAIL AT SOLDIER PILE

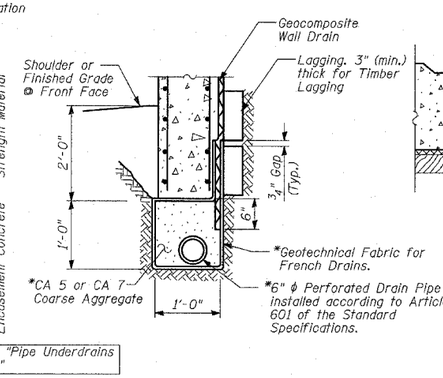


## PIPE UNDERDRAIN DETAIL BETWEEN SOLDIER PILES

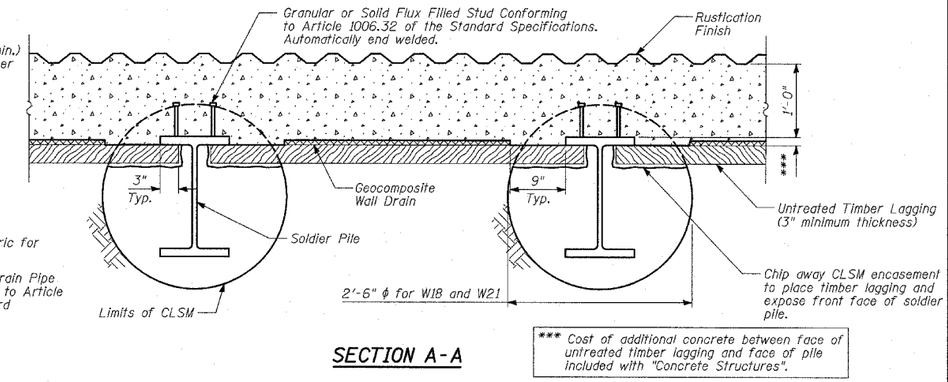


## SECTION A-A

## GENERAL NOTES:

1. The geocomposite wall drain shall be constructed according to Section 591 of the Standard Specifications.
2. The Contractor is responsible for the design and performance of the lagging using no less than 3" nominal rough-sawn thickness and the minimum tabulated unit stress in bending ($f_b$), used in the design of timber lagging shall be 1000 psi.
3. Stud shear connectors shall be 3/4" ϕ x 6" granular or solid flux filled headed studs, automatically end welded to the front flange of the soldier piles.

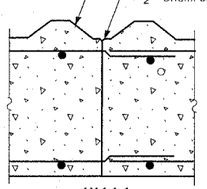


## WALL
(Joint in Valley)

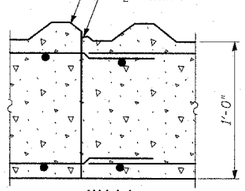


## WALL
(Joint on Diagonal)

## CONSTRUCTION JOINT DETAILS

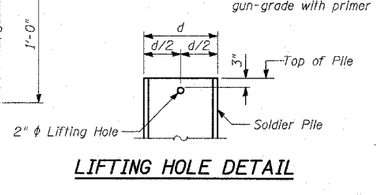


## LIFTING HOLE DETAIL

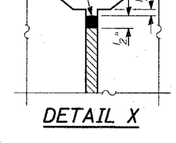


## DETAIL X

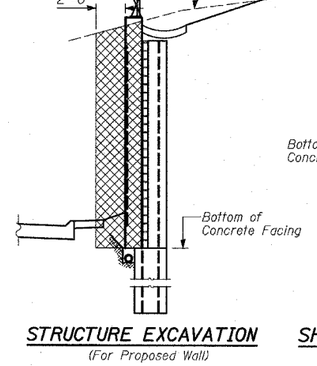


## STRUCTURE EXCAVATION
(For Proposed Wall)

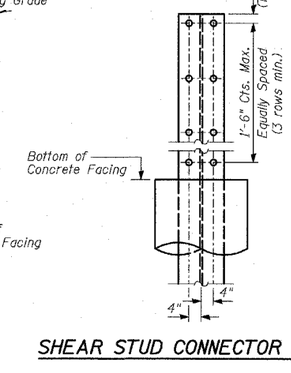


## SHEAR STUD CONNECTOR DETAIL

## BILL OF MATERIAL

| ITEM | UNIT | TOTAL |
|---|---|---|
| Structure Excavation | CU YD | 364 |
| Stud Shear Connectors | EACH | 750 |
| Untreated Timber Lagging | SQ FT | 3,347 |
| Geocomposite Wall Drain | SQ YD | 439 |
| Pipe Underdrains for Structures, 6" | FOOT | 642 |

SHEET 11 OF 17

| REVISIONS | |
|---|---|
| NAME | DATE |
| | |
| | |
| | |
| | |
| | |
| | |
| | |
| | |
| | |
| REVISED | 04/15/05 |

ILLINOIS DEPARTMENT OF TRANSPORTATION

F.A.I. 94 (DAN RYAN EXPRESSWAY)
RETAINING WALL ALONG LAFAYETTE AVE.
AT 97TH ST.
WALL 68
WALL CROSS SECTIONS & DETAILS

S.N. 016-W967 — DESIGNED BY: MI, DJR
SCALE: N.T.S. — DRAWN BY: MAF, DJR
DATE: MARCH 25, 2005 — CHECKED BY: TD, MI

TY·LIN INTERNATIONAL

P:\02373\Structur\C\Dwl\Wall 68\Wall68_w967.dgn 04/12/2005 02:32:32 PM