F.A.I. RTE.	SECTION	COUNTY	TOTAL SHEETS	SHEET NO.
94	*	COOK	207	188
STA.		TO STA.		
FED. ROAD DIST. NO.	ILLINOIS	FED. AID PROJECT		

* (1516.1, 1717 & 1818) R-9

62695

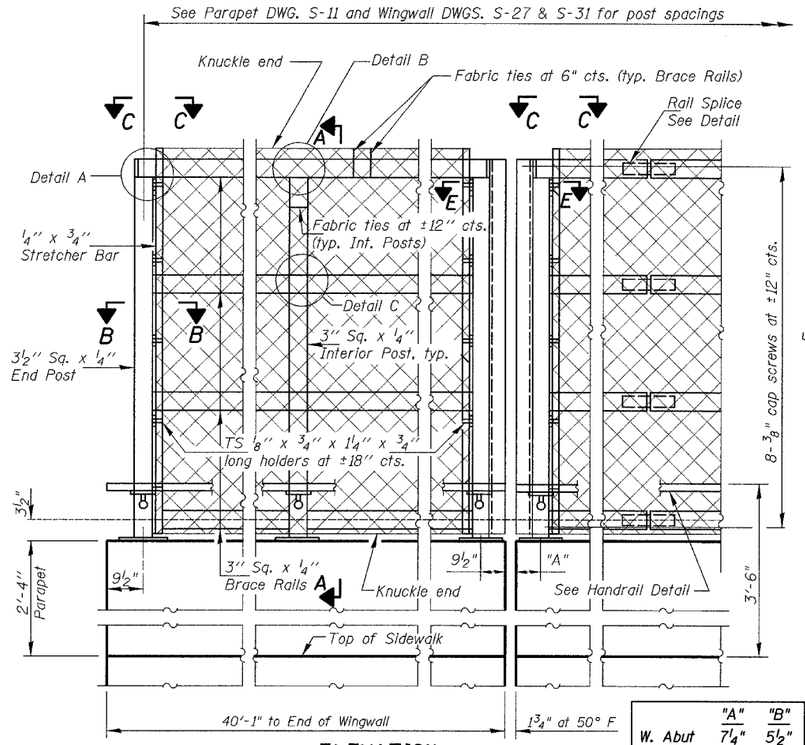

	"A"	"B"
W. Abut	7 1/4"	5 1/2"
E. Abut	6 1/4"	4 1/2"

ELEVATION
(Inside Face)

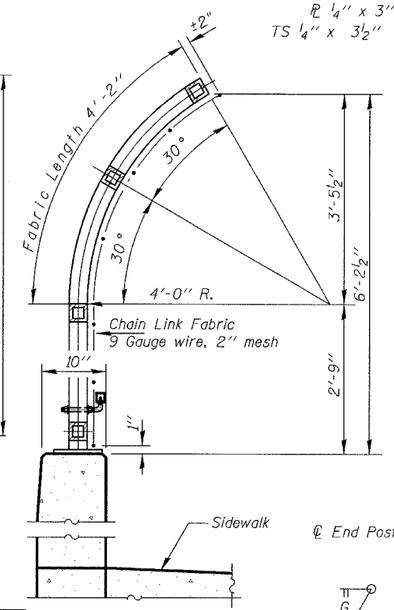

SECTION A-A

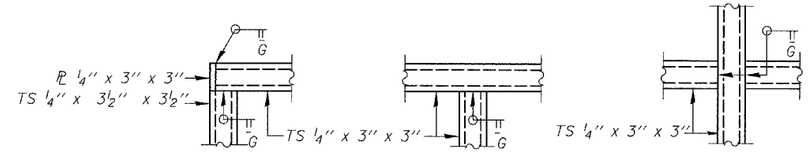

DETAIL A
DETAIL B
DETAIL C

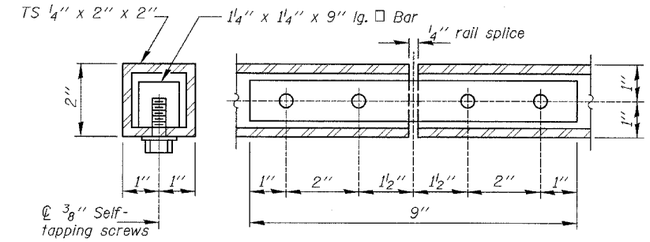

HANDRAIL SPLICE

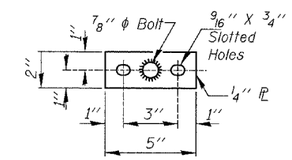

BASE PL
(Handrail)

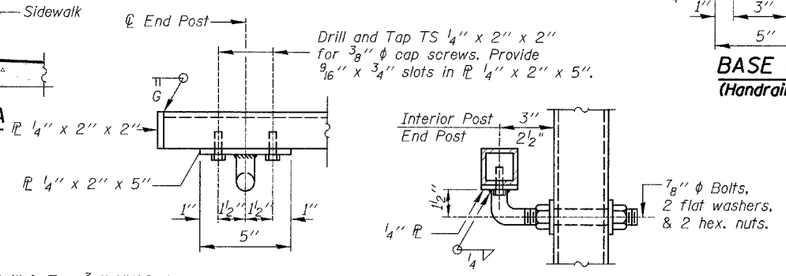

HANDRAIL DETAIL

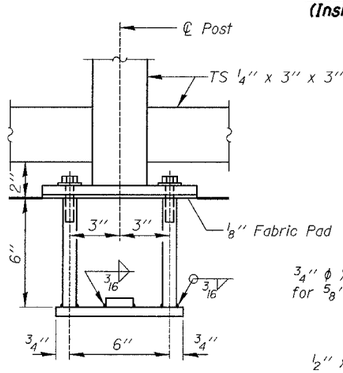

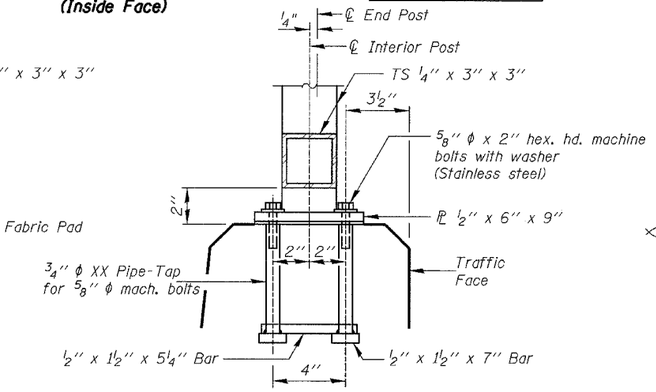

ANCHOR BOLT DETAILS

In lieu of the cast-in-place anchor device shown, the Contractor has the option of drilling and epoxy grouting 5/8" ϕ anchor rods. Embedment shall be according to the manufacturer's specifications.

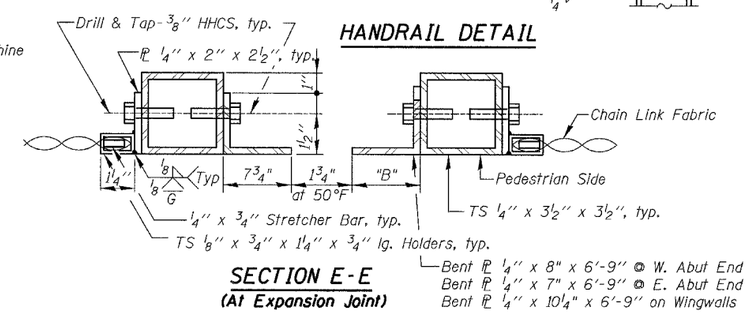

SECTION E-E
(At Expansion Joint)

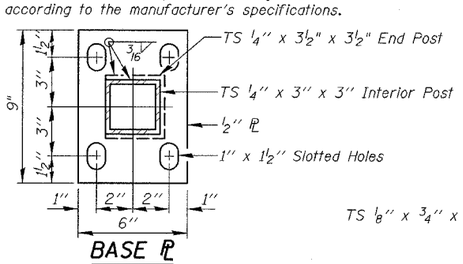

BASE PL

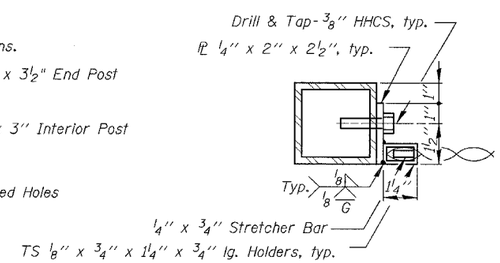

SECTION B-B

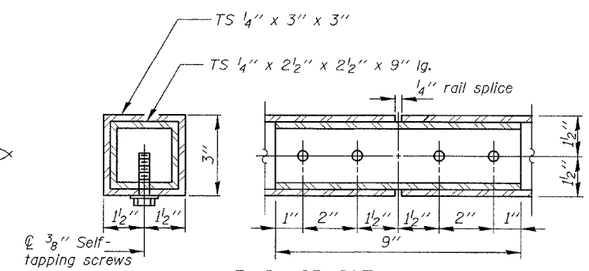

RAIL SPLICE

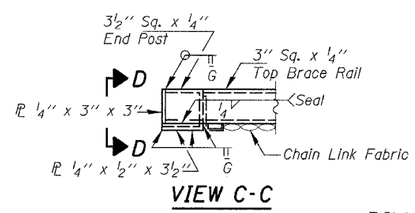

VIEW C-C

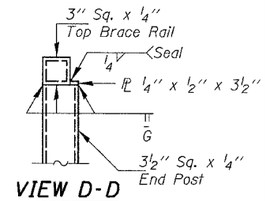

VIEW D-D

NOTES

Railing shall be according to Section 509 of the Standard Specifications, except as noted, and will be paid for at the Contract Unit Price per foot for Bridge Fence Railing.

The 9 gauge fabric ties shall be according to Article 1006.27(d) of the Standard Specifications.

Installation of the chain link fabric shall be according to Section 664 of the Standard Specifications.

Hollow structural steel tubing shall conform to the requirements of ASTM designation A 500, Grade B, structural steel tubing.

All other steel shapes and plates shall conform to the requirements of AASHTO M 270 Grade 36.

The chain link fabric shall be placed along Pedestrian Side as shown on Section A-A.

Stretcher bars shall be used at each end of fabric.

A minimum of one complete turn is required at ends of all fabric ties.

If the option of drilling and epoxy grouting the anchor rods is chosen, the Contractor shall use the capsule or the adhesive cartridge type anchor rods that have been previously tested and given a prior approval by the Department. The Contractor shall install these anchor rods in pre-drilled holes according to the manufacturer's recommendations and procedures. The capsule or the adhesive cartridge shall be sealed with pre-measured amounts of the adhesive chemical.

Space reinforcement to miss anchor rods.

All posts, railing, splices, anchor devices, and plates shall be galvanized after shop fabrication according to AASHTO M 111 and ASTM A 385. All bolts, nuts, washers, and anchor rods shall be galvanized according to AASHTO M 232 except stainless steel bolts as noted.

Vent holes for galvanizing shall be placed in the posts and rails at locations that will not allow the accumulation of moisture in the members.

The chain link fabric shall conform to the requirements of Article 1006.27(a)(1)a, b or c of the Standard Specifications.

BILL OF MATERIAL

Item	Unit	Quantity
Bridge Fence Railing	Foot	694

DWG. S-18 of 42

REVISIONS	
NAME	DATE

ILLINOIS DEPARTMENT OF TRANSPORTATION
BRIDGE FENCE RAILING
76TH STREET OVER FAI-94
FAP ROUTE 1541 SECTION 1818 R-9
COOK COUNTY
STATION 73+49.33
STRUCTURE NUMBER 016-2850

SCALE: NONE DESIGNED BY: TB DRAWN BY: TL
DATE: March 25, 2005 CHECKED BY: WPM CHECKED BY: WPM

KNIGHT
Engineers & Architects

FILE: L:\6592.021\Cad\Sheets\Roadway Structures\Bridge\6592-S2850-R40X.dgn