F.A.I. RTE.	SECTION	COUNTY	TOTAL SHEETS	SHEET NO.
90/94	2005-071 LS	COOK	39	31
STA.		TO STA.		
FED. ROAD DIST. NO. 1	ILLINOIS	FED. AID PROJECT		

60A77

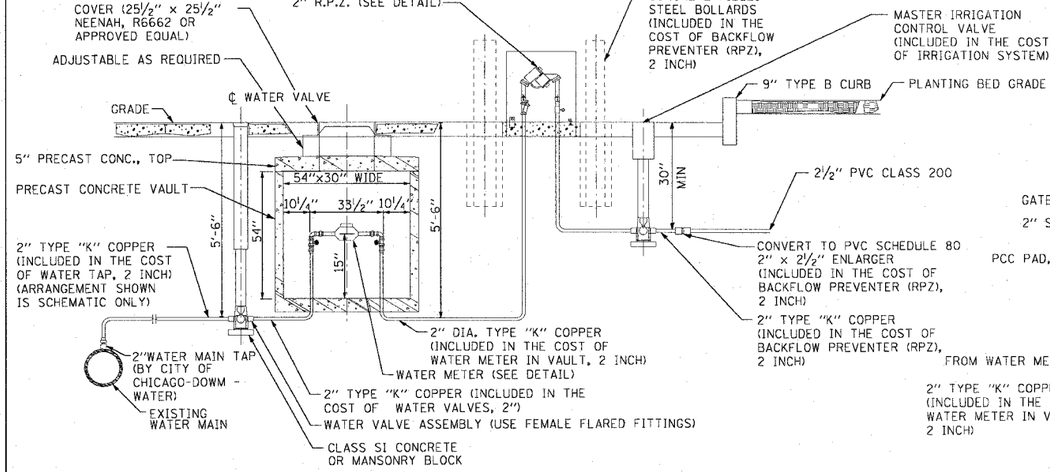

TYPICAL METER INSTALLATION FOR 2" WATER SERVICE WITH BACK FLOW PREVENTER

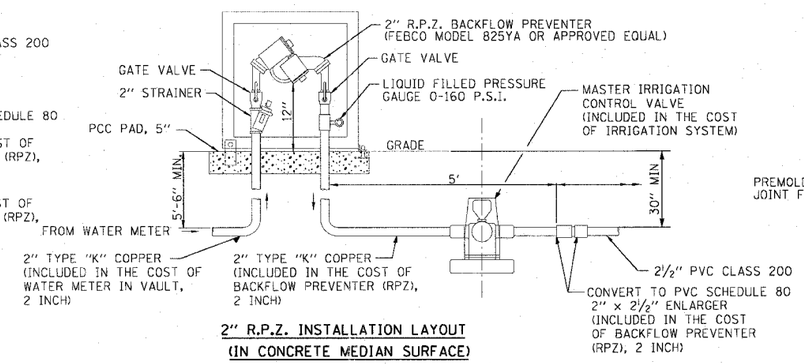

2" R.P.Z. INSTALLATION LAYOUT (IN CONCRETE MEDIAN SURFACE)

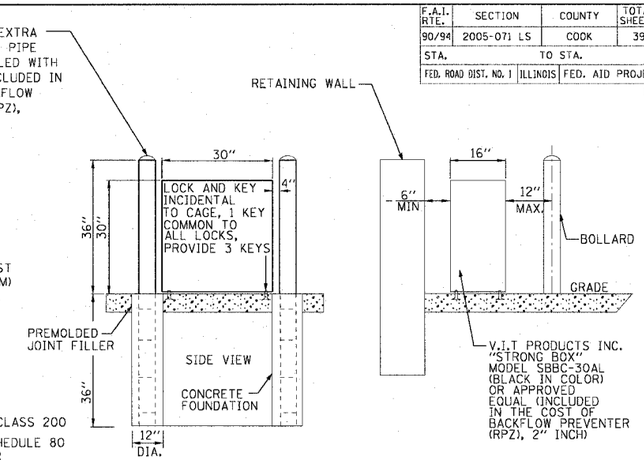

DETAIL OF BACKFLOW PREVENTER ENCLOSURE AND BOLLARDS

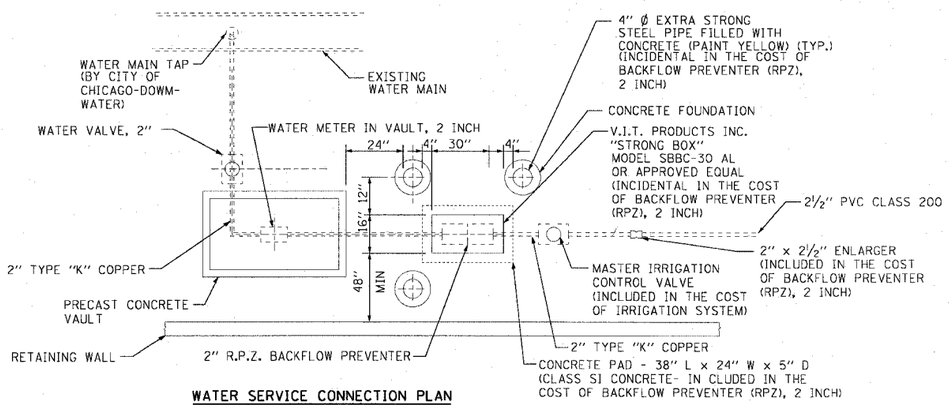

WATER SERVICE CONNECTION PLAN
(WATER METER IN CONCRETE MEDIAN SURFACE)

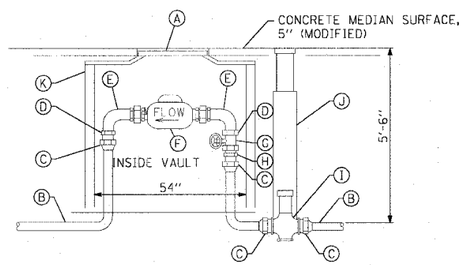

A	FRAME AND LID (NEENAH R6662)
B	2" TYPE K COPPER PIPE
C	FEMALE FLARED FITTING
D	BRASS BUSHING
E	BENT METER COUPLING
F	METER
G	FULL PORT CONTROL VALVE
H	MALE I.P.S. TO FLARED ADAPTER
I	ROUNDWAY
J	WATER VALVE ASSEMBLY
K	PRECAST CONCRETE VAULT

NEW COPPER 2" WATER SERVICE STANDARD METER VAULT

TO PROTECT WATER SYSTEM FROM FREEZING

1. SHUTOFF WATER AT ROADWAY.
2. REMOVE AND STORE RPZ AND KEEP FROM FREEZING.
3. OPEN LAWN HYDRANT AND LOOSEN METER NUT.
4. BLOWOUT WATER LINES FROM RPZ TO METER AND FROM RPZ TO LAWN HYDRANT.
5. IN SPRING REINSTALL RPZ AND HAVE RPZ TESTED BY LICENSED PERSONAL WITH A PERMIT FROM ROOM 900 CITY HALL.
6. EACH RPZ MUST BE IDENTIFIED OR NUMBERED SO THAT RPZ WILL BE REINSTALLED IN THE SAME LOCATION AT ALL TIMES.
7. EACH LAWN HYDT. HOSE CONNECTION MUST BE MARKED "NON POTABLE WATER DO NOT DRINK".

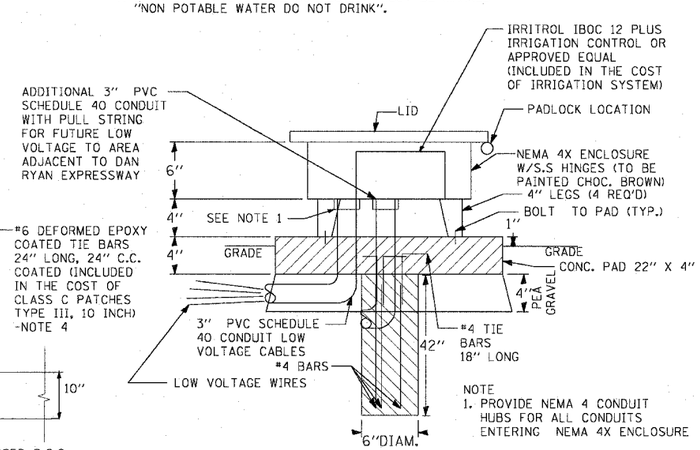

NOTE
1. PROVIDE NEMA 4 CONDUIT HUBS FOR ALL CONDUITS ENTERING NEMA 4X ENCLOSURE

IRRIGATION CONTROLLER NEMA 4X ENCLOSURE - DETAIL
N.T.S.

NOTES:

1. ALL TIE BARS AND DOWEL BARS TO BE EPOXY COATED (INCLUDED IN THE COST OF PAVEMENT REMOVAL AND REPLACEMENT).
2. ADDITIONAL ONE FOOT(1') OF BITUMINOUS SURFACE REMOVAL ON EITHER SIDE OF CONCRETE PATCH SHALL BE REMOVED PRIOR TO PLACING BITUMINOUS SURFACE COURSE.
3. PIPE BEDDING, TAMPED IN PLACE 4" MINIMUM UNDER PIPE AND 1'-0" ABOVE TOP OF PIPE. SHALL BE WELL SPADED ON BOTH SIDES OF PIPE.
4. DOWELL BARS MAY BE DELETED SUBJECT TO APPROVAL BY ENGINEER.

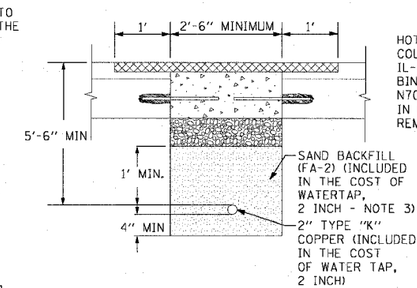

2" TYPE "K" COPPER PIPE (INCLUDED IN THE COST OF WATER TAP, 2 INCH) - PAVEMENT SECTION

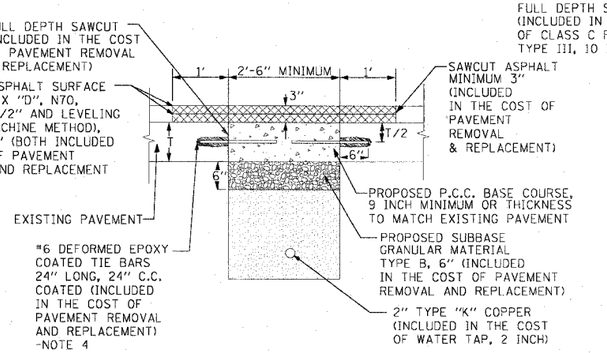

PAVEMENT REMOVAL & REPLACEMENT

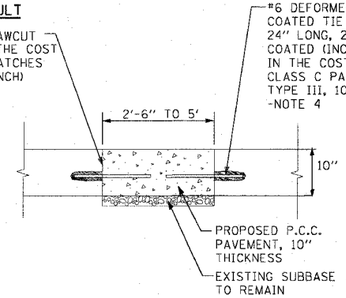

CLASS C PATCHING TYPE III

CTE | AECOM

REVISIONS	
NAME	DATE

ILLINOIS DEPARTMENT OF TRANSPORTATION
F.A.I. 90/94 (DAN RYAN EXPRESSWAY)
63RD STREET GATEWAY LANDSCAPING AND IRRIGATION
CONSTRUCTION DETAILS
PLANTING BEDS - STANDARD METER VAULTS, WATER SERVICE INSTALLATION, AND PAVEMENT REMOVAL AND REPLACEMENT DETAILS

SCALE: NONE | DRAWN BY: JF
DATE: MAY 02, 2008 | CHECKED BY: BB

p:\0046ovl\29 gateway_irrigation\sh\22f 163rd\mc22f0120.sht 06/06/2008 11:15:59 AM