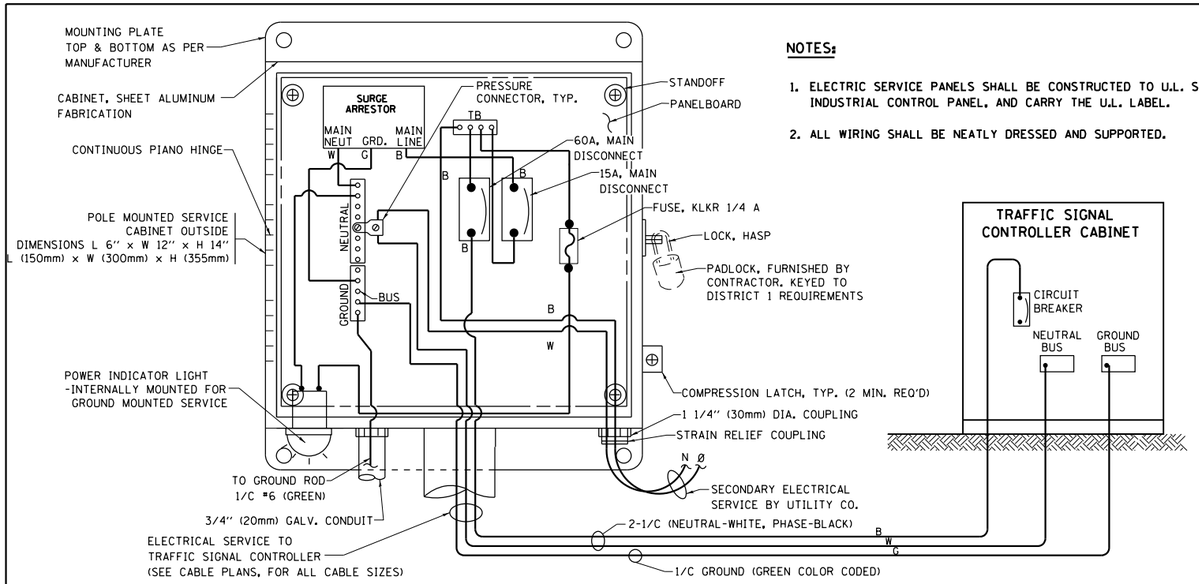

NOTES:

1. ELECTRIC SERVICE PANELS SHALL BE CONSTRUCTED TO U.L. STD 508, INDUSTRIAL CONTROL PANEL, AND CARRY THE U.L. LABEL.
2. ALL WIRING SHALL BE NEATLY DRESSED AND SUPPORTED.

ELECTRICAL SERVICE – PANEL DIAGRAM (TYPICAL FOR POLE AND GROUND MOUNTED SERVICE)
SERVICE INSTALLATION POLE MOUNT (SHOWN)

(NOT TO SCALE)

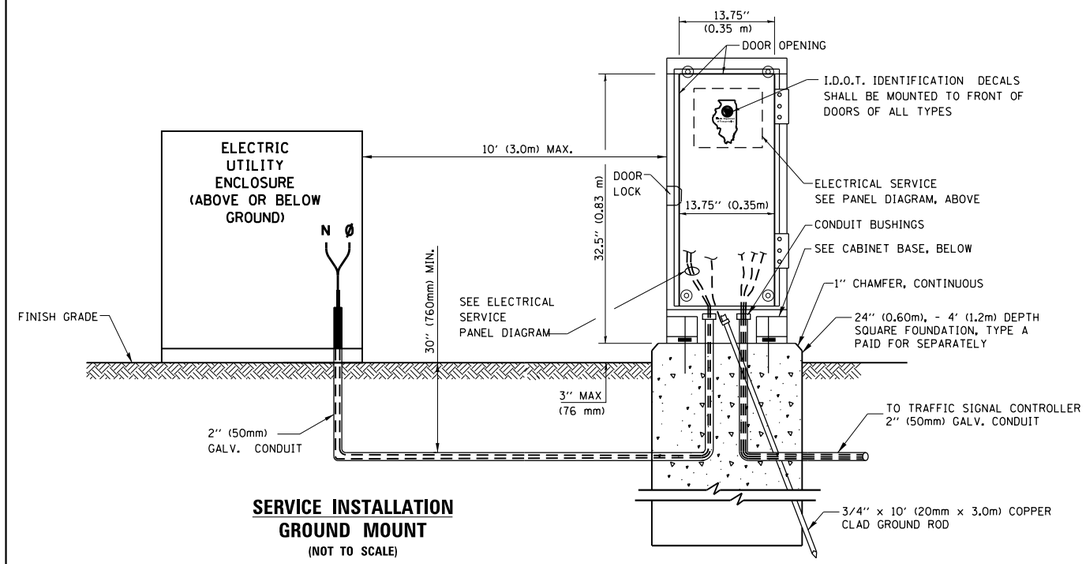

SERVICE INSTALLATION
GROUND MOUNT

(NOT TO SCALE)

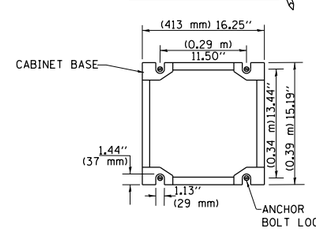

CABINET – BASE BOLT PATTERN

(NOT TO SCALE)

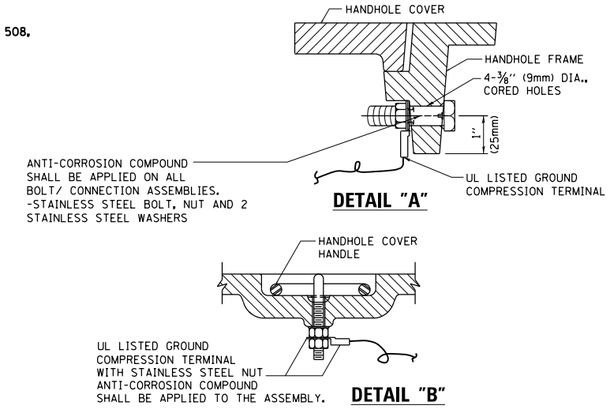

DETAIL "A"

DETAIL "B"

NOTES:
GROUNDING SYSTEM

1. THE GROUNDING SYSTEM SHALL CONSIST OF AN INSULATED CONDUCTOR TYPE XLP, NO. 6 A.W.G., STRANDED COPPER TO BE INSTALLED IN RACEWAYS. THE GROUNDING CABLE SHALL BE INSTALLED IN A CONTINUOUS MANNER AS SHOWN ON THE CABLE PLAN PROVIDED. ALL GROUNDING CONDUCTORS SHALL BE BONDED TO METAL ENCLOSURE (HANDHOLE, POST, MAST ARM, CONTROLLER, ETC.). GROUND ROD SHALL BE 3/4" DIA. x 10'-0" (20mm x 3.0m) LONG, COPPER CLAD. ONE GROUND ROD SHALL BE INSTALLED AT ALL POST FOUNDATIONS, POLE FOUNDATIONS, CONTROLLER CABINET FOUNDATION AND ELECTRICAL SERVICE INSTALLATION AS INDICATED ON THE CABLE PLAN. IF THERE ARE ANY SPECIAL CONDITIONS SUCH AS SUB-SURFACE CONDITIONS OR INSTALLATION PROBLEMS, THE RESIDENT ENGINEER SHALL BE NOTIFIED OR CONTACT THE BUREAU OF TRAFFIC, ILLINOIS DEPARTMENT OF TRANSPORTATION DISTRICT ONE AT (847) 705-4139.
2. THE NEUTRAL CONDUCTOR AND THE GROUND CONDUCTOR SHALL BE CONNECTED IN THE SERVICE INSTALLATION. AT NO OTHER POINT IN THE TRAFFIC SIGNAL SYSTEM SHALL THE NEUTRAL AND GROUND CONDUCTORS BE CONNECTED.
3. ALL EQUIPMENT GROUNDING CONDUCTORS SHALL TERMINATE AT THE GROUND BUS IN THE CONTROLLER CABINET.
4. THE CONTRACTOR SHALL PROVIDE A GROUND CABLE WITH CONNECTORS BETWEEN THE HANDHOLE COVER AND HANDHOLE FRAME.

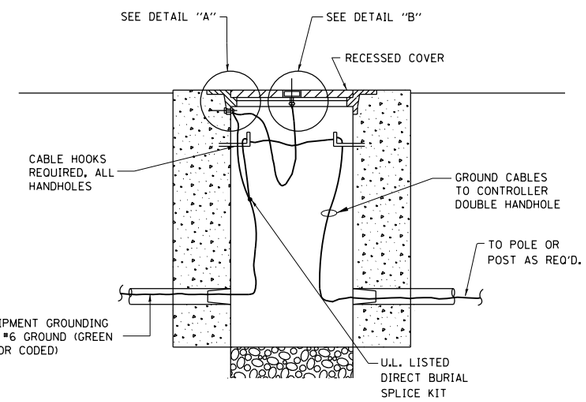

HANDHOLE COVER & FRAME – GROUNDING DETAIL

(NOT TO SCALE)

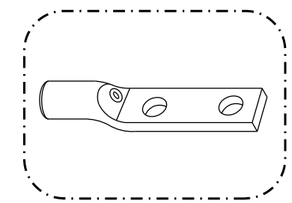

HEAVY-DUTY COMPRESSION TERMINAL
(BURNDY TYPE YGHA OR APPROVED EQUAL)

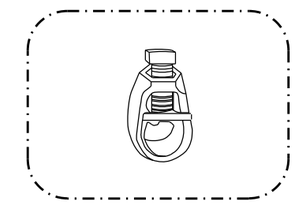

3/4" (20mm) HEAVY-DUTY GROUND ROD CLAMP
(BURNDY TYPE GRC OR APPROVED EQUAL)

NOTES:

- ALL CLAMPS SHALL BE BRONZE OR COPPER, UL APPROVED.
- GROUND CABLE SHALL BE LOOPED OVER HOOKS IN THE HANDHOLES
  6.5' (2.0m) SLACK SHALL BE PROVIDED IN SINGLE HANDHOLES
  13' (4.0m) OF SLACK SHALL BE PROVIDED IN DOUBLE HANDHOLES.
  5' (1.4m) OF SLACK SHALL BE PROVIDED BETWEEN FRAME AND COVER.

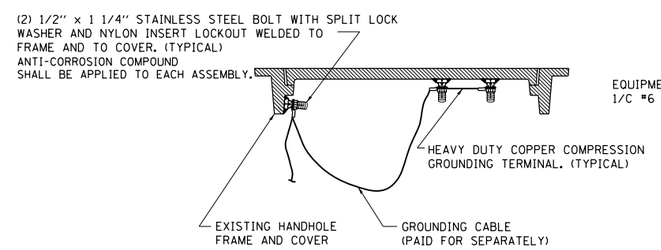

EXISTING HANDHOLE COVER & FRAME – GROUNDING DETAIL

(NOT TO SCALE)

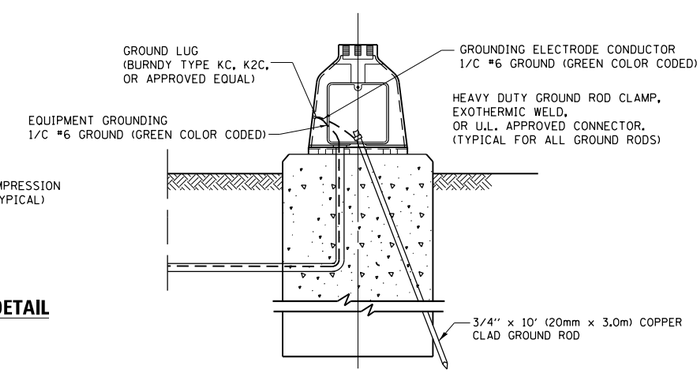

MAST ARM POLE / POST–GROUNDING DETAIL

(NOT TO SCALE)

FILE NAME = c:\pw_work\pwidot\gaglianobt\d0182450\DistStd.dgn	USER NAME = gaglianobt	DESIGNED - DAD	REVISED - DAG 1-1-14	STATE OF ILLINOIS DEPARTMENT OF TRANSPORTATION	DISTRICT ONE STANDARD TRAFFIC SIGNAL DESIGN DETAILS	F.A.P. RTE.	SECTION	COUNTY	TOTAL SHEETS	SHEET NO.
		DRAWN - BCK	REVISED -			362	0105R-N(12)	COOK	48	28
	PLOT SCALE = 100.0000 ' / in.	CHECKED - DAD	REVISED -			TS-05		CONTRACT NO. 60T96		
	PLOT DATE = 5/9/2014	DATE - 10-28-09	REVISED -		SCALE: NONE SHEET NO. 4 OF 7 SHEETS STA. TO STA.	FED. ROAD DIST. NO. 1	ILLINOIS	FED. AID PROJECT		