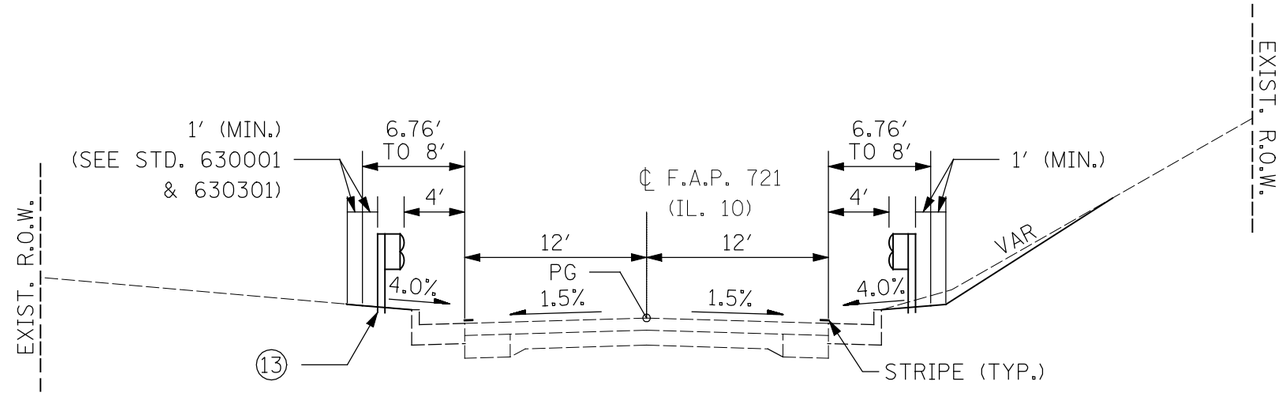

PROPOSED TYPICAL SECTION

STA. 1207+00.00 TO STA. 1209+05.24
STA. 1214+50.46 TO STA. 1215+00.00

✳ 10 HMA SURFACE COURSE, MIX "C", N50 (168 LBS/SQ YD)
✳ 11 LEVELING BINDER (MACHINE METHOD), N50 (84 LBS/SQ YD)
✳ 12 HMA SURFACE REMOVAL, 2 1/4"
13 GUARDRAIL (TYP.)

✳ STA. 1209+64.86 TO STA. 1210+14.86
STA. 1211+63.80 TO STA 1212+13.80

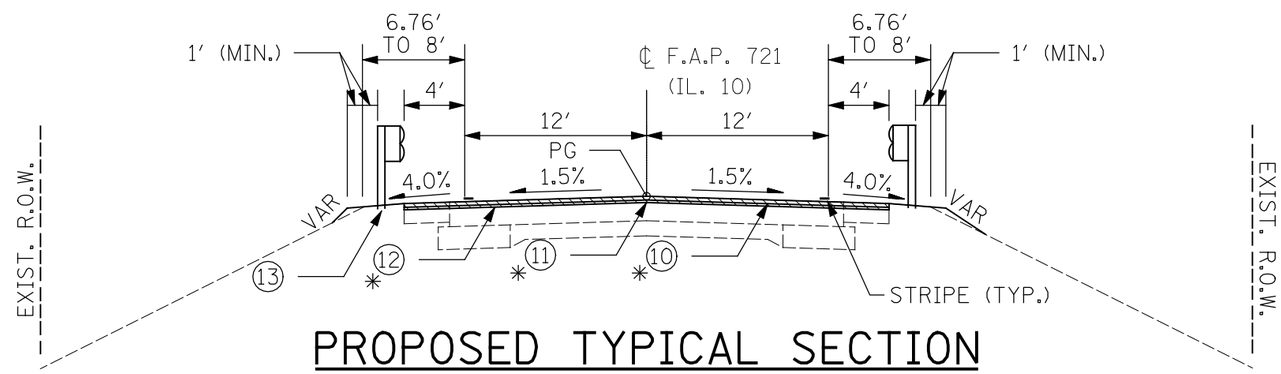

PROPOSED TYPICAL SECTION

STA. 1209+05.24 TO STA. 1210+14.86
STA. 1210+14.86 TO STA. 1211+63.80 (BRIDGE OMISSION)
STA. 1211+63.80 TO STA. 1214+50.46

MIXTURE USE	SURFACE	LEVELING BINDER
PG GRADE	PG 64-22	PG 64-22
MAX % RAP ALLOWABLE	15 %	25 %
DESIGN AIR VOIDS	4.0% @ Ndes=50	4.0% @ Ndes=50
MIXTURE COMPOSITION	IL 9.5	IL 9.5
FRICTION AGGREGATE	MIX C	MIX C
PLANT CONTROL LIMITS	HIGH ESAL	HIGH ESAL
DENSITY CONTROL METHOD	NUCLEAR	N.A.

IF RAP OPTION IS SELECTED, THE ASPHALT CEMENT GRADE MAY NEED TO BE ADJUSTED. THIS WILL BE DETERMINED BY THE ENGINEER.

NOTE:

BECAUSE THE THICKNESS OF THE HMA RESURFACING OVER THE EXISTING PCC BASE COURSE WIDENING (3') STA. 1209+05.24 TO STA. 1210+14.86 AND STA. 1211+63.80 TO STA. 1214+50.46 IS UNKNOWN. THE QUANTITIES FOR PROPOSED SURFACE REMOVAL AND PROPOSED RESURFACING MAY NEED TO BE ADJUSTED AT THE TIME OF CONSTRUCTION.